GENERAL CATALOGUE

2022



INDEX®

A PERFECT FIXING

A PERFECT FIXING

GENERAL CATALOGUE

2022

02 PRESENTATION

20 NEWS

22 TABLE OF CONTENTS

39 METAL FIXINGS

73 CHEMICAL FIXINGS

89 PLASTIC FIXINGS

101 FIXINGS AND ACCESSORIES FOR THERMAL INSULATION SYSTEMS (ETICS)

105 FIXINGS FOR HOLLOW MATERIALS

111 RIVETS

117 CABLE, CHAIN AND FENCE ACCESSORIES

123 FIXINGS AND ACCESSORIES FOR PLASTERBOARD

131 DIRECT FIXING

141 SCREWS FOR DECKING AND FAÇADES

149 SELF-DRILLING, SELF-TAPPING AND PVC SCREWS

165 WOOD SCREWS

187 NAILS AND BOLTS

199 TIMBER CONNECTORS

207 STANDARDISED NUTS AND BOLTS

225 DRILL BITS, TIPS AND ACCESSORIES

231 HEAVY-DUTY METAL CLAMPS

247 LIGHT METAL CLAMPS

263 FIRE PROTECTION SYSTEMS

267 GUTTER SUPPORTS

269 PLASTIC CLAMPS

283 PROFILES AND SUPPORTS

295 INSTALLATION SYSTEMS AND FIXINGS FOR PHOTOVOLTAIC PANELS

305 QUICK BEAM FIXING SYSTEMS

309 THREADED ROD AND FIXING ACCESSORIES

317 FIXINGS FOR BATHROOM FITTINGS AND HVAC SYSTEMS

323 EASYKITS

329 STAINLESS RANGE

353 TECHNICAL CHARACTERISTICS

420 INDEX BY ITEM

INDEX®
A PERFECT FIXING



A PERFECT FIXING for **YOUR BUSINESS**





At **INDEX®**, we are manufacturers and industrial suppliers of fixing systems, offering global solutions adapted to your business needs.

BUT WE ARE MUCH MORE THAN THAT. WE ARE A LARGE TEAM ENGAGED IN CONTINUOUS RESEARCH, DEVELOPMENT AND INNOVATION, AND, LET'S FACE IT, WE'RE MORE THAN A LITTLE OBSESSED WITH ACHIEVING OUR GOAL: TO PROVIDE THE PERFECT FIXING.

Whatever the size of your business, at **INDEX®**, we will find the perfect fixing for your needs.







WHY IS INDEX® A PERFECT FIXING FOR YOUR BUSINESS?

At **INDEX®**, we believe that nothing is impossible when it comes to striving for perfection. Therefore, we continuously invest in new products, approvals, production processes, and technological resources to meet all the demands of the market.

These are just some of the reasons why
INDEX® STANDS OUT

AVAILABILITY AND WIDE PRODUCT RANGE

Over 10,000 products permanently in stock (guaranteed).

WE WORK WITH THE CHANNEL

We sell through the distribution channel, enabling us to gain first-hand market knowledge.

WE ARE EXPERT MANUFACTURERS

Over 30 years of experience in manufacturing fixing systems enables us to ensure the maximum quality of all our products, the best service, and competitive overall costs.

CERTIFIED QUALITY

We hold the most important certificates and approvals, verifying that all of our products meet the highest quality standards.

INTERNATIONAL PRESENCE

We are a global company with sales in more than 90 countries on the five continents and facilities in Spain, China and Mexico.

ENGINEERING AND TECHNICAL SUPPORT SERVICES

We support our customers with structural design and calculations, joint site visits, and technical training on topics related to fixing systems.

QUALITY CUSTOMER SERVICE

Our customers are at the heart of everything we do. We have a team of over 300 people at your service.

INDEX SPACE STUDIO

We have the perfect display solution for all our customers, whatever their business.

AVAILABILITY AND WIDE PRODUCT RANGE

We are specialists in anchors, screws, clamps, and installation systems. We have the widest range of products, with over 10,000 items permanently in stock (guaranteed) at our facilities in Spain, China, and Mexico (over 45,000 m^2).



WE HAVE ALL THE FIXINGS YOU COULD POSSIBLY NEED AND WE ARE CONSTANTLY INCORPORATING NEW PRODUCTS: anchors, screws, clamps, installation systems, etc.



WE ARE EXPERT MANUFACTURERS

Our control over the entire production process combined with over 30 years of experience in manufacturing fixing systems enables us to ensure the maximum quality of all our products, the best service, and competitive overall costs.



OVER 30 YEARS OF EXPERIENCE







INTERNATIONAL PRESENCE

We sell in more than 90 countries on the five continents, and our products have been used in the largest construction projects worldwide.







QUALITY CUSTOMER SERVICE

To guarantee the perfect fixing, we have a team of over 300 people at your service and 45,000 m² facilities with a 22,000 pallet capacity, guaranteeing a delivery time of 24-48 hours and a fast response to any queries you may have.



OVER 300 PEOPLE AT YOUR SERVICE





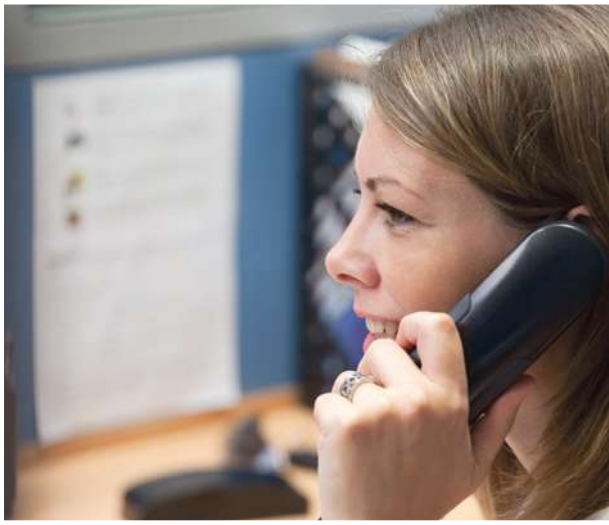

WE WORK WITH THE CHANNEL

At **INDEX®**, we sell through the distribution channel, enabling us to interact directly with our customers. We operate in the most important channels, offering product ranges adapted to each channel and highly qualified professionals to provide you with the best service.







CERTIFIED QUALITY

Our obsession with perfection drives us to continually expand our certifications and approvals from independent laboratories and the primary authorities, ensuring the maximum quality of our products and management systems.

APPROVALS

European Technical Assessment

European Conformity

Seismic Assessment

ICC-ES®

Fire resistance

Underwriters Laboratories

FM Assessment

Leadership in Energy and Environmental Design

Low VOC emissions

Water Regulations Advisory Scheme

CERTIFICATIONS



OUR COMMITMENT TO QUALITY THROUGH THE TÜV CERT CERTIFICATION GUARANTEES THAT INDEX® HAS IMPLEMENTED A QUALITY MANAGEMENT SYSTEM THAT COMPLIES WITH THE ISO 9001:2015 STANDARD

ENGINEERING AND TECHNICAL SUPPORT SERVICES

We offer full technical consultancy through our team of specialist engineers. We have a technical assistance service, our own specialised software, and the most extensive range of technical documentation.

And most importantly, our team will support you in structural design and calculations, site visits, and technical training on everything related to fixing systems.

TECHNICAL ASSISTANCE AND CONSULTING SERVICE





TECHNICAL TRAINING

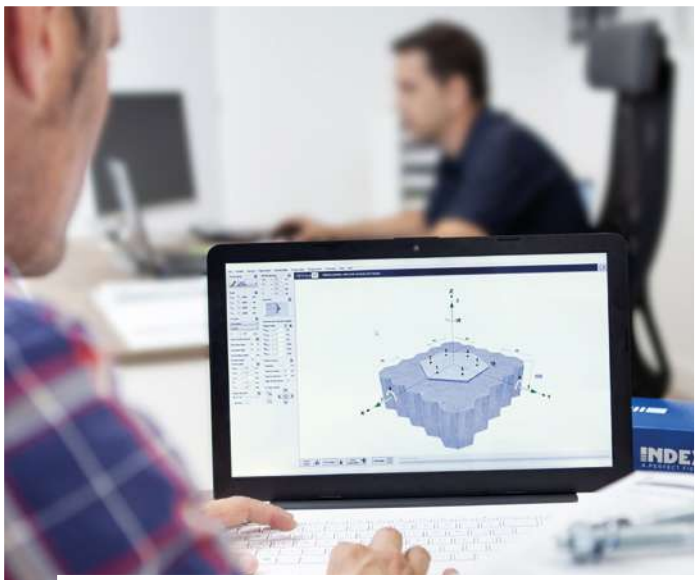

ENGINEERING SERVICES AND CALCULATIONS



SPECIALISED SOFTWARE



INDEXcal



INDEXwood



We have the best software to meet the needs of each specific case.

INDEXcal software to calculate anchors and to design structural solutions.

INDEXwood software for the design and calculation of timber structure connections.

INDEXmor online tool to calculate the required number of chemical cartridges according to different parameters.



INDEXmor



WIDE RANGE OF TECHNICAL DOCUMENTATION AVAILABLE

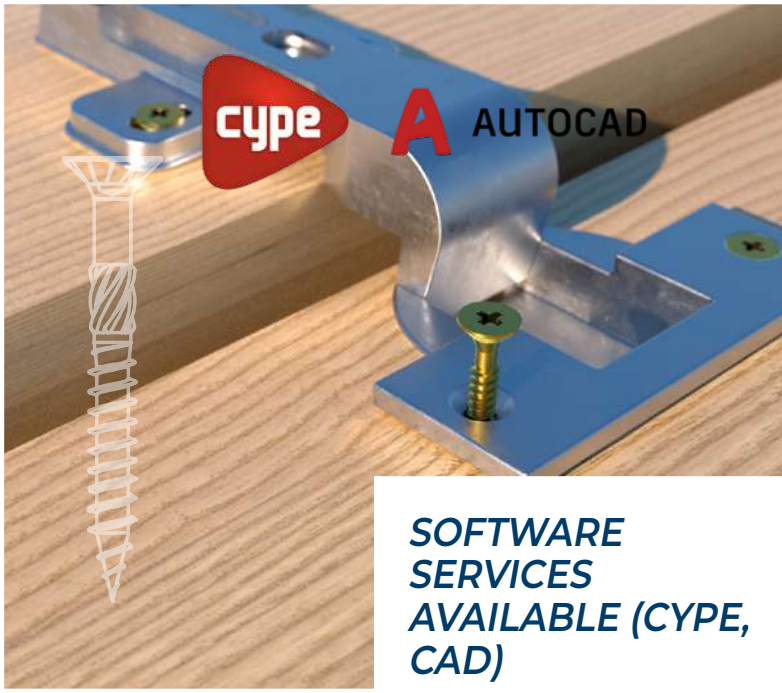

SOFTWARE SERVICES AVAILABLE (CYPE, CAD)



INDEX SPACE STUDIO

INDEX Space Studio is the INDEX® customised display design and installation service for customers.

This service is unique to the market and 100% customisable according to the specific needs of each customer (e.g., product, packaging format, rotation, and/or business type), aiming to maximise the sales space.











ADVANTAGES AND CHARACTERISTICS

- **CUSTOMISABLE**. Installation service adapted to the needs of each business.
- **100% OPTIMISED INSTALLATIONS.** The system is designed to maximise the available space at the point of sale.
- **MULTIPLE SOLUTIONS.** We offer a wide range of display solutions. Gondola, wall, end cap, island, promotional, etc.
- **QUALITY AND SAFETY.** We work with high-quality furniture that guarantees the maximum safety and robustness of all components.
- **VERSATILITY.** The system is compatible with all **INDEX®** products and packaging.
- **WE OPTIMISE THE RESTOCKING PROCESS.** Aware of the importance of facilitating the restocking and maintenance of shelves, our furniture and packaging guarantee the most ergonomic and practical set-up.
- **MAXIMUM PRODUCT VISIBILITY.** Designed to improve the end customer's purchasing decisions. We offer multiple visual merchandising solutions that complement and improve the installation.









INDEX SPACE STUDIO

HOW DOES IT WORK?

INDEX SPACE STUDIO has 6 easy steps:

1. ANALYSIS

The **INDEX®** sales team works with the customer to analyse their needs (e.g., available space, products to be incorporated, type of packaging, etc.)

2. DESIGN

With the information obtained, the specialised installation team organises and optimises the product selection.

3. PRESENTATION

The proposed installation solution is presented with a 3D simulation of the shelving and the planogram, showing the arrangement of the product selection.

4. PREPARATION AND SHIPPING

To facilitate display assembly, new installation shipments are prepared separately from other usual orders.

5. ASSEMBLY

The **INDEX®** specialised assembly team carries out the entire initial assembly. Installation of the furniture, location of the product, and installation of merchandising elements.

6. MAINTENANCE AND MONITORING

We ensure regular inspections of each shelf installation, proposing possible improvements, maintaining it in optimal and updated conditions, and facilitating restocking.







INDEX
A PERFECT FIXING



TYPES OF SHELVES

GONDOLA



SLOPING SHELVES
Improves the display of all products. Recommended for window box and INDEXmix display formats.



BULK DRAWERS
Available in metal and recycled plastic. Ideal for the presentation of bulk products.





HOOKS
Available in 30, 40 and 50 cm. Recommended for displaying blister packs and EASYkits products.



STRAIGHT SHELVES
Suitable for the presentation of heavy products such as professional boxes and containers.
Combined with separators, it is perfect for chemicals, silicones, and polyurethane foams.

PROMOTIONAL DISPLAYS AND OTHERS



ISLAND

Possible combinations.
Measurements per unit:
100 x 50 x 150 cm (W x D x H)



3 units
100 x 150 x 150 cm



4 units
100 x 200 x 150 cm



6 units
100 x 300 x 150 cm



8 units
100 x 400 x 150 cm

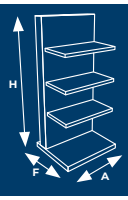

SIZES AVAILABLE IN STOCK for gondola/wall, end cap, and island displays:
- **W:** 100 cm.
- **H:** 165, 195 and 240 cm.

Other sizes available **upon request**. (Delivery time of 4 weeks):
- **W:** 50, 70, 85 and 130 cm.
- **H:** 135, 150, 225 and 255 cm.
- **D:** 50 cm.



INDEX SPACE STUDIO

TYPES OF PACKAGING

Aware of varying quantity and packaging needs, INDEX® has developed different alternatives to meet the specific needs of each user.

All our packaging is made from recyclable, 100% sustainable, and environmentally friendly materials.

We facilitate the identification and selection of products with our colour-coded labelling system.





PROFESSIONAL BOX

Designed with highly resistant recycled cardboard to withstand the most demanding jobs.



BOX WITH WINDOW

Visual and appealing. Recommended for automatic sales shelves.



BLISTER PACKS & EASYkits

The best solution for customers in need of small quantities.



PLASTIC CONTAINERS

These are the perfect solution for large installers. They facilitate on-site handling and have an appealing design.



SELF SERVICE BAGS

Ready to be placed on the shelf. Intermediate quantities between professional boxes and blister packs.



BULK

Available for anchors, screws, clamps, and cable ties. A good solution for installations with automatic sales spaces.



WE EXPAND RANGE

FIXINGS AND ACCESSORIES FOR THERMAL INSULATION SYSTEMS (ETICS)

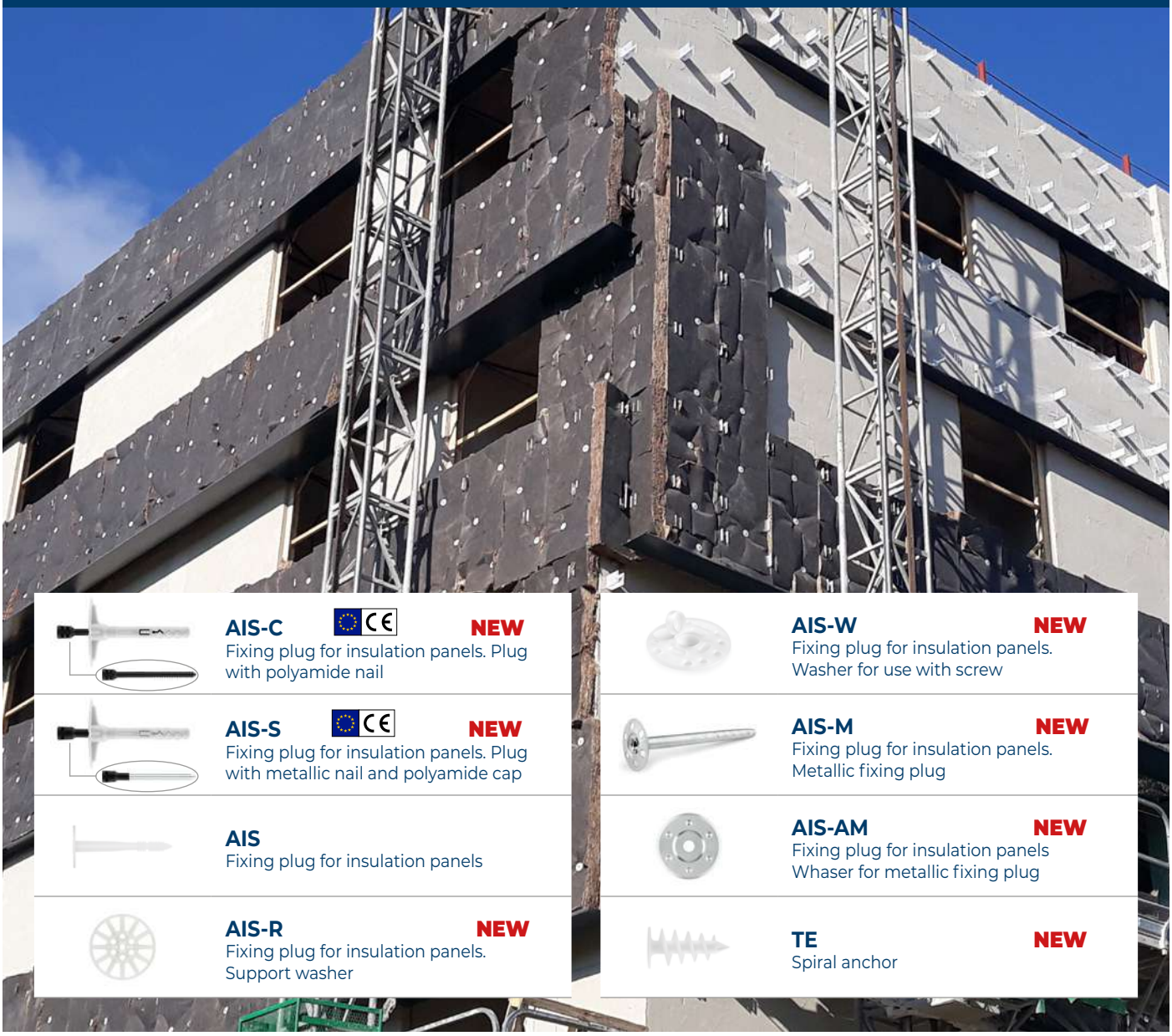

AIS-C CE **NEW**
Fixing plug for insulation panels. Plug with polyamide nail

AIS-S CE **NEW**
Fixing plug for insulation panels. Plug with metallic nail and polyamide cap

AIS
Fixing plug for insulation panels

AIS-R **NEW**
Fixing plug for insulation panels.
Support washer

AIS-W **NEW**
Fixing plug for insulation panels.
Washer for use with screw

AIS-M **NEW**
Fixing plug for insulation panels.
Metallic fixing plug

AIS-AM **NEW**
Fixing plug for insulation panels
Whaser for metallic fixing plug

TE **NEW**
Spiral anchor

OTHER NEWS

HE-C4
With collar. A4 Stainless steel. ETA Assessed for non-structural applications



PAGE 63

TC-MA
Metal nail plug with steel drill



PAGE 66

EQ-8.8
Stud bolt for chemical anchor, with nut and washer. Zinc-plated 8.8



PAGE 79

GAS AND POWDER ACCESSORIES
We are expanding the range of accessories for direct powder and gas fixing.



PAGE 136

NEW RANGE

INSTALLATION SYSTEMS AND FIXINGS FOR PHOTOVOLTAIC PANELS

We present a complete solution for all types of rooftop photovoltaic installations




Clamps and gauges for assembling panels


Profiles, junctions, guides and joints for the support structure


Connectors + accessories for assembling solar structures


Triangles for installing solar panels


Adjustable accessories for installing solar panels


Direct fastening accessories for installing solar panels


Watertightness accessories for installing solar panels


Kits for solar installations

OTHER NEWS

RS-A2

Self-drilling screw, blind-rivet head and PH recess. Stainless Steel A2



PAGE 155

SU-AB / SU-CA

We are expanding the range of rapid fastening systems on beams with the beam clip for clamps and the beam clip for cables



PAGE 307

RV-ZN 8.8

Threaded rod. 8.8, zinc-plated



PAGE 310

AB-ITS / AB-ITD

Indextube stainless steel clamps in single or double version



PAGE 347

LIST OF CONTENTS

Metal fixings

MTP Option 1	41		
NEW MTP-A4 Option 1	41		
MTP-X Option 1	42		
MTP-G Option 1	42		
MTH Option 7	43		
MTH-A4 Option 7	44		
MTH-A2 Option 7	45		
MTA	46		
TWA	47		
DO-MT	47		
THE Option 1	49		
THA Option 1	50		
THP Option 1	50		
THT Option 1	50		
TFE Option 1	51		
TFN Option 1	51		
TFS Option 1	52		
TFM Option 1	52		
TFF Option 1	52		
HP	54		
HP TP	54		
HR	54		
HE	54		
HE + ARVUL	54		
SL-PT Option 1	55		
SL-PC Option 1	55		
CH-TO Option 7	57		
CH-A2 Option 7	57		
CH-8.8 Option 7	58		
CH-8.8 E	58		
CH-PL Option 7	58		
CH-PI Option 7	58		
CH-INB Option 7	59		
CH-INN Option 7	59		
CH-ES	59		
CH-GA	60		
CH-GE	60		
CH-GF	60		
CH-GF A2	60		
CH-AR	61		
CH-AF	61		
CH-AF A2	61		
HE-HO Option 7	63		
HE-A4 Option 7	63		
HE-CL Option 7	63		
NEW HE-C4	63		
HE-HC	64		
HE-NO	64		
HE-NS	64		
EXP	64		
NEW EXP-C	64		
HC	65		
TALA	65		
TA-ME	65		
AN-CU	65		
NEW TC-MA	66		
ZA-CA	66		
ZA-TO	66		
ZA-TL	66		
ZA-PR	66		
ZA-ES	67		

LIST OF CONTENTS

ZA-GA	67	
ZA-GF	67	
ZA-AR	67	
ZA-AF	67	
AC-CA	68	
AC-CI	68	
AC-TO	68	
AC-ES	68	
AC-GA	68	
AC-AR	68	
HI-CA	69	
HI-CI	69	
HI-TO	69	
HI-GA	69	
HI-AR	69	
EPS	70	
TRA	70	
AVR	70	
AVC	70	
AN-23	71	
AN-51	71	
AN-50 CT	71	
TC-SO 2	71	
TC-SO 8	71	
AN-TA	71	

Chemical fixings

MO-PU CE Option 7	75	
MO-P+ CE Option 7	75	
MO-PS+ CE Option 7	75	
MO-PS P+ CE Option 7	75	
MO-V CE Option 7	76	
MO-VS CE Option 7	76	
MO-H CE Option 1	76	
MO-HW CE Option 1	76	
MOPURE CE Option 1	77	
MOPUR3 CE Option 1	77	
MOPISTO	78	
MOPISSI	78	
MOPISPUR6	78	
MOPISNEU	78	
MOPISP3	78	
MOBOMBA	78	
MORCANU	78	
MORCAPU	78	
MORCEPKIT	78	
MO-TN	78	
MO-TM	78	
MO-TR	78	
MO-ES	78	
CA-QU CE Option 8	79	
EQ-AC	79	
NEW EQ-8.8	79	
EQ-A2	79	
EQ-A4	79	
MS-PR CE	81	
MS-TR CE	81	
MS-SF CE	81	
SI-PR CE	84	
SI-PRS CE	84	
SI-UNI CE	84	

LIST OF CONTENTS

SI-UNS CE	85	
SE-ACR CE	85	
MS-CA	85	
PU-SP	86	
PU-SC	86	
PU-TP	86	
NEW PU-TPR	86	
PU-TC	87	
PU-FP	87	
PU-FC	87	
PU-EP	87	
PU-PI	88	
PU-CA	88	
PU-CL	88	

Plastic fixings

T-NUX A CE	91	
T-NUX A A4 CE	91	
T-NUX E CE	91	
T-NUX E A4 CE	92	
T-NUX T CE	92	
T-FUX E CE	92	
T-NUX	92	
TC-6A	93	
TC-6E	93	
TC-2A	93	
TC-SP	94	
TC-SP EP	94	
TC-CA	95	
TC-CA EP	95	
TC-A2	94	
TC-CC	94	
TN4S	96	
TN4S EP	96	
TN4S-L	97	
MEDU	98	
TACON	99	
TACOL	99	
TACOL-A	99	
IPA-GR	100	
IPA-GN	100	
IPA-AR	100	
IPA-TO	100	
TA-PL	100	

Fixings and accessories for thermal insulation systems (ETICS)

AIS-C CE	102	
NEW AIS-S CE	102	
AIS	102	
NEW AIS-R	102	
NEW AIS-W	103	
NEW AIS-M	103	
NEW AIS-AM	103	
NEW TE	103	

Fixings & accesories for Plasterboard

BA-ES	106	
BA-GA	106	

LIST OF CONTENTS

CA-BA	106	
PA-ES	107	
PA-GA	107	
CA-PA	107	
IN-CO	108	
IN-HE	108	
IN-SI	108	
INPIN	109	
INPIS	109	
KITINPIN	109	
ANCLA	110	
TAPLA NY	110	
TAPLA ME	110	
TAPLA ZK	110	

Rivets

RE-NO	112	
RE-IN	113	
RE-CA	113	
RE-BL	113	
RE-NE	114	
RE-FL	114	
TR-AV	115	
TR-CA	115	
TR-CR	115	
RM-MA	116	
RM-PA	116	
RM-EX	116	

Rigging hardware

SJ-Z	118	
TS-GA	118	
CM-TENSO	119	
CM-TENSOVE	119	
CM-TT	119	
EV-H	119	
EV-M	120	
GR-Z	120	
GD-Z	121	
CM-BP	122	
CM-BT	122	
CM-TA	122	
CM-TP	122	
CM-UN	122	

Fixings & accesories for Drywall

PL-F	CE	124	
PL-EP	CE	124	
PL-RA	CE	125	
PL-TR	CE	125	
PL-CA	CE	125	
CP-PA	CE	126	
CP-GV	CE	126	
CP-AC		126	
CP-MV		126	

LIST OF CONTENTS

OME CE	127	
MAB	127	
HO-CU CE	127	
HO-CR CE	127	
EMP CE	128	
CAB CE	128	
ADU CE	128	
PCU CE	128	
SUS CE	129	
TR-BL	129	
TR-13	129	
TR-15	129	

Direct fixing

FP08GUN CE	132	
FP12GUN CE	132	
FP-IP	132	
FP-CR	132	
FP-CG 08	133	
FP-CL 08	133	
FP-AP 08	133	
FP-C30	133	
FP-AM 08	133	
FP-CR 08 M6	134	
FP-CR 08 M8	134	
FP-PI 08	134	
NEW FP-CG12	134	
FP-CGD12	134	
FP-CL12	134	
FP-CLD12	135	
FP-CT12	135	
FP-PISCL08	135	
FP-PISPL08	135	
FP-PISCL12	135	
FP-PISCM12	135	
FP-PISCT12	135	
FG-GUN CE	136	
FG-GUNEL CE	136	
FG-CL	137	
NEW FG-CLH	137	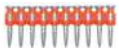
FG-ARAM	137	
FG-ARAM EP	137	
NEW FG-PLET	137	
NEW AB-PID	138	
FG-ABRA	138	
FG-BASE	138	
FG-CAEL	139	
FG-CLCAR	139	
NEW FG-IMAN	139	
NEW FG-BAT	139	
FG-CAR	139	
FG-GAS	139	

Screws for decking and façades

DIN-7504-K	142	
DIN-7504-K A2	142	
DIN-7504-K + ARVUL	143	

LIST OF CONTENTS

DIN-7504-K CP + ARVUL	143	
AUTO	144	
AUTO + ARVUL	144	
ABE BIMETAL	144	
ABE BIMETAL + ARVUL	144	
AUTO BIMETAL	145	
AUTO BIMETAL + ARVUL	145	
DIN-7504-K RE	145	
DIN-7504-K RE + ARVUL	146	
AUE	146	
AUE + ARVUL	146	
PS 3	147	
PS 3 + ARVUL	147	
PS 3 + ARVUL A2	147	
PS 5	147	
PS 5 + ARVUL	147	
PS 5 + ARVUL A2	147	
FIBR	148	
ARVUL	148	
ARVUL A2	148	
ATAP	148	

Drill, tapping and pvc screws

DIN-7504-N HP Z	150	
DIN-7504-N HP A2	151	
DIN-7504-N HP N	151	
DIN-7504-N HP B	151	
DIN-7504-N HT	152	
DIN-7504-N HC Z	152	
DIN-7504-P HP Z	153	
DIN-7504-P HP N	153	
DIN-7504-P HT	154	
ABA	154	
ATA	154	
RS	154	
RS-A2	155	
NEW BCP Z	155	
BCP A2	155	
BCP N	155	
BCP B	155	
BCP CB	155	
TAEZ	156	
TAEN	156	
DIN-7981 HP Z	156	
DIN-7981 HP B	157	
DIN-7981 HP N	157	
DIN-7982 HP Z	158	
CP Z	159	
CP A2	159	
CP B	159	
CP N	159	
PVC-10 Z	161	
PVC-20 B	161	
PVC-20 Z	161	
PVC-30	161	
PVC-40 B	161	
PVC-40 Z	162	
PVC-50 B	162	
PVC-50 Z	162	
PVC-70	162	

LIST OF CONTENTS

PVC-70 TP	162	
PVC-90	162	
PVC-VEK	163	
PVC-VEK 13	163	
PVC-VEK 10	163	
PVC-KOM 10	163	

Wood screws

TEX-BP	166	
TEX-ZP	167	
TEX-BT	168	
TEX-ZT	169	
TEX-A2	169	
TEC-BT	171	
TEX-AB	171	
TP-PO B	174	
TP-PO Z	176	
TP-TO	178	
TP-A2	179	
TR-PO	179	
DIN-571	180	
DIN-571 A2	181	
571 TR	181	
INV Z	181	
INV A2	182	
INV N	182	
ESTRINV Z	182	
ESTRINV N	182	
TRE-Z	183	
TRE-PV	183	
FS Z	183	
FS 3009	183	
FS 3011	183	
FS 5010	184	
FS 6005	184	
FS 8004	184	
FS 8017	184	
FS 8019	184	
FS 9006	185	
FS 9010	185	
FS 9011	185	
FIMA	185	

Nails and bolts

AL-RE	188	
AL-PL	188	
AL-RO	189	
AL-RO B	189	
AL-HC	190	
AL-HC B	190	
AL-HA	191	
AL-HA B	191	
HC-RM	192	
HA-RM	192	
PA-CP	193	
PA-CC	193	

LIST OF CONTENTS

PA-CX	194	
GM-Z	194	
CF-B	194	
SV-NB	195	
SV-NM	195	
SV-C	195	
MLTPPOP	196	
MLTBOP	196	
MLTPPOT	197	
MLMULT	197	
MLPLAT	197	

Wood connectors

SO-UO	200	
SO-UR	200	
SC-EI	200	
SC-ED	200	
SC-LD	201	
SC-GA	201	
SC-RF	201	
SC-RG	201	
SC-AS	201	
SC-CE	201	
SC-OB	202	
NEW SC-OZ	202	
SC-CD Z	202	
SC-CI	202	
SC-EM	202	
SC-ER	203	
SC-GE Z	203	
SC-LC	203	
SC-MX	203	
SC-PD	203	
SC-RE Z	203	
PT-BR	204	
PT-EM	204	
PT-ET	204	
PT-OB	204	
PT-TT	204	
PT-UN	204	
AP-AR	205	
AP-AT	205	
AP-FL	205	
AP-FU Z	205	
AP-PD	205	
AP-PG	206	
AP-PT	206	
AP-UE Z	206	
AP-SB	206	
AP-EN	206	
VM-PF	206	

Standardized nuts and bolts

DIN-933	208	
DIN-933 A2	210	
DIN-931	211	
DIN-6921	212	
DIN-912	213	
DIN-603/934	214	
DIN-608	215	
DIN-84	215	
DIN-7985	216	

LIST OF CONTENTS

DIN-963	217	
DIN-965	217	
DIN-934	218	
DIN-934 A2	218	
DIN-985	219	
DIN-985 A2	219	
DIN-6923	220	
DIN-1587	220	
DIN-125	221	
DIN-125 A2	221	
DIN-9021	222	
DIN-9021 A2	222	
DIN-127	223	
TU-MA	224	
DIN-6798 A	224	

Plugs, tips and accessories

B-HDS	226	
PU-PH	226	
PU-TO	226	
PU-OX	227	
PU-PO	227	
PU-CU	227	
BOCA	228	
PU-PM	228	
ATAP	228	
TP-CR B	229	
TP-CR N	229	
TP-TP	229	

Heavy metal clamps

AB-RA	234	
AB-IA	235	
AB-IR	235	
AB-RE	236	
AB-RE V	236	
AB-RE A2	237	
AB-RE A4	237	
AB-RI	238	
AB-RI V	238	
AB-RI A2	239	
AB-RI A4	239	
AB-RI DES	240	
PA-EX	240	
CO-AR	240	
AB-ICP	240	
AB-AIS 13	241	
AB-AIS 19	241	
AB-AIS 30	241	
AB-AIS 40	243	
AB-GA	242	
AB-M8	242	
AB-DE Z	243	
AB-DE G	243	
AB-DP Z	243	
AB-DP G	243	
AB-ZI	244	
AB-ZI A2	244	
AB-SA	245	
AB-GP	245	

LIST OF CONTENTS

Light metal clamps

AB-M6	250	
AB-M6 Z	250	
AB-M6 A2	251	
AB-D6	251	
AB-D6 Z	251	
AB-6I	252	
AB-DI	252	
AB-M7 Z	253	
AB-D7 Z	253	
AB-7I Z	254	
AB-7ID Z	254	
AB-PI	255	
AB-PU	255	
AB-IP	256	
AB-SI	256	
AB-TO	256	
AB-SF	257	
AB-SF A2	257	
AB-SF IR	258	
AB-SF IRC	258	
AB-SF IRR	258	
CI-PE	258	
CI-PE A2	258	
CI-PR	259	
AB-CR	259	
NEW AB-ITS	259	
NEW AB-ITD	259	
AB-BU	260	
AB-GM	260	
AB-GS	261	
AB-GD	261	

Fire protection systems

AB-PE	264	 
AB-CH	264	 
AB-CI	265	 
AN-CU	265	 

Gutter Supports

TE-MO	268	
TE-GA	268	
TE-GR	268	
TE-PE	268	

Plastic clamps

BN-N	271	
BN-B	272	
TACOBRI N	272	
TACOBRI B	273	
BN-GR	273	
TACOBRI G	273	
BN-DT	273	
BN-ID	274	
BN-PL	274	
BN-BA	274	
BN-VE	274	
BN-MA	275	
BN-AM	275	
BN-AZ	275	
BN-RO	275	
AB-IN	276	
AB-ID	276	

LIST OF CONTENTS

AB-GU	277	
AB-MUG	277	
AB-PR	278	
AB-MS	278	
AB-MD	278	
AB-TS	279	
AB-TD	279	
AB-TC	279	
FI-CA AB	280	
FI-CA PS	280	
FI-CA PD	280	
FI-CA CL	280	
GR-NY BL	281	
GR-NY N	281	
GR-NY NT	281	

Profiles and supports

GP-Z	286	
GP-G	286	
GP-A2	286	
GP-PL	286	
GP-PVC	286	
GL-O	287	
GP-O	287	
SP-Z	287	
SP-V	287	
SP-H	288	
SP-HX	288	
TO-GU	288	
TO-GR	288	
TU-GU	288	
TU-GRA	289	
EG-Z	289	
EG-A2	289	
PU-Z	289	
PG-Z	289	
PG-A2	289	
SO-TP	290	
GP-X 21	290	
GP-X 41	290	
SP-X	290	
SP-RX	290	
SP-UX	291	
PR-X	291	
RE-SX	291	
TG-X	291	
TO-GRX	291	
TU-GX	291	
TU-MU	292	
TU-RX	292	
TU-RXA	292	
EG-X	292	
SC-RX	292	
EMP-X	293	
RT-X	293	
UN-PX	293	
UN-EX	293	
UN-TX	293	
PG-X	293	
AB-GX	294	

LIST OF CONTENTS

SO-TP	294	
UN-CO	294	
SO-PG	294	

Installation systems and fixings for photovoltaic panels

NEW	KFR-SC	296	
NEW	PGS-A	296	
NEW	GM-A	296	
NEW	GP-XS	296	
NEW	EMP-XS	296	
NEW	PSA-A	297	
NEW	PSA-AV	297	
NEW	PSA-UN	297	
NEW	PSE-A	297	
NEW	PSE-UN	297	
NEW	KFS-FI	298	
NEW	KFS-FL	298	
NEW	TU-RX A2	298	
NEW	DIN-603 A2	298	
NEW	DIN-6921 A2	298	
NEW	DIN-6923 A2	298	
NEW	DIN-127 A2	299	
NEW	TPA-R	299	
NEW	TPA-P	299	
NEW	TRP-XS	299	
NEW	NU-XS	299	
NEW	GS-TC	300	
NEW	GS-TU	300	
NEW	STR	300	
NEW	KFS-MA	300	
NEW	KFS-AU	300	
NEW	KFS-RV	301	
NEW	PMO	301	
NEW	TAC + ARVUL A2	301	
NEW	TAC BIMETAL+ ARVUL A2	301	
NEW	RE-TE	301	
NEW	ARS-P	302	
NEW	ARS-S	302	
NEW	CS-B	302	
NEW	KC-PSA	302	
NEW	KC-PSD	302	
NEW	KC-PSE	303	
NEW	KC-GPX	303	
NEW	KC-GPD	303	
NEW	KT-PSE	303	
NEW	KT-GPX	303	

Steel beam clamps

	SU-MO	306	
	SU-CL	306	
	SU-VA	306	
	SU-CU	307	
NEW	SU-AB	307	
NEW	SU-CA	307	

Threaded rod and fixing accessories

	RV-ZN	310	
NEW	RV-ZN 8.8	310	
	RV-A2	310	
	RV-2M	311	
	VR-SE	311	
	MAHE	311	

LIST OF CONTENTS

MARE	312	
MARI	312	
MA-MH	312	
AR-FO	312	
GA-FO	313	
GE-SP	313	
AB-TA	313	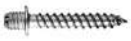
AB-TA B	313	
AB-TA A2	314	
AB-TR	314	
AB-PM 7	314	
AB-TG	314	
TM-VR	314	
ES-DR	315	
ES-DA2	315	
AB-FP	316	
AB-FC	316	
PF-A4	316	
PF-ZN	316	

Bathroom and air conditioning fixings

RA-TRG	318	
RA-TRI	318	
RA-FRE	318	
RA-FIN	318	
RA-RO	319	
RA-FEM	319	
RA-RAY	319	
RA-PES	319	
SA-LN	320	
SA-LH	320	
SA-IL	320	
SA-WZ	320	
SA-WL	320	
SA-CI	321	
SA-WH	321	
SA-WHM	321	
SA-TE TB	321	
SA-TE AL	321	
CO-SO	322	
CO-KS	322	
Easykits	323	

Stainless range

NEW	MTP-A4 CE Option 1	330	
	MTH-A4 CE Option 7	330	
	MTH-A2 CE Option 7	331	
	DO-MT	331	
	CH-A2 CE Option 7	332	
	CH-PI	332	
	CH-GF A2	332	
	CH-AF A2	333	
	HE-A4 CE Option 7	333	
NEW	HE-C4 CE	333	
	AC-CI	333	

LIST OF CONTENTS

HI-CI	334	
AVR	334	
AVC	334	
EQ-A2	334	
EQ-A4	335	
T-NUX A A4 CE	335	
T-NUX E A4 CE	335	
TC-A2	335	
DIN-7504-K A2	336	
ABE BIMETAL	336	
ABE BIMETAL + ARVUL	336	
AUTO BIMETAL	337	
AUTO BIMETAL + ARVUL	337	
PS 3 + ARVUL A2	337	
PS 5 + ARVUL A2	337	
ARVUL A2	338	
DIN-7504-N HP A2	338	
BCP A2	338	
CP A2	338	
TEX-A2 A2 INOX CE	339	
TP-A2 A2 INOX	339	
DIN-571 A2 CE	340	
INV A2 CE	340	
DIN-933 A2	341	
NEW DIN-6921 A2	342	
NEW DIN-603 A2	342	
DIN-934 A2	342	
NEW DIN-6923 A2	343	
DIN-985 A2	343	
DIN-125 A2	343	
DIN-9021 A2	344	
NEW DIN-127 A2	344	
AB-RE A2	345	
AB-RE A4	345	
AB-RI A2	346	
AB-RI A4	346	
AB-ZI A2	347	
NEW AB-ITS	347	
NEW AB-ITD	347	
AB-M6 A2	347	
AB-SF A2	348	
AB-SF IR	348	
AB-SF IRC	348	
AB-SF IRR	348	
CI-PE A2	348	
SA-IL	349	
SA-CI	349	
GP-A2	349	
EG-A2	349	
PG-A2	350	
RV-A2	350	
MARI	350	
AB-TA A2	350	
ES-DA2	351	
RE-IN	351	
PF-A4	351	

ICONOGRAPHY

MATERIALS AND PRODUCT COATINGS

- Stainless A2
- Stainless A4
- Stainless
- Bimetal
- Atlantis C4-M
- Atlantis C3-H
- Atlantis C3-M
- Atlantis C3-L
- Atlantis C2-H
- Atlantis C2-M
- Atlantis C2-L
- Yellow zinc plated
- Zinc-plated
- Zinc-plated black
- Zinc-plated white
- Phosphated coated
- Blue galvanised
- Zamak
- Brass
- Copper
- Frosted
- Aluminium
- Steel
- Nylon
- PVC
- Plastic-coated black
- Plastic-coated white
- Plastic-coated yellow
- Polypropylene

MATERIALS FOR USE


Aluminium carpentry


PVC carpentry


Gutter


IPN beam


Ventilation pipe


Plasterboard


Cable


Chain


Rope


Chrome-plated pipe


Sheet metal - heavy profile


Sheet metal assembly


Wood veneer


Fibre cement


Butane pipe


Wood - metal


Plaster


Reinforced concrete



Cracked concrete


Cast pipe


Concrete


Hollow concrete


Solid brick


Copper pipe


Gas pipe


Thermo-clay


Stone


Adobe brick


PVC pipe


Cable


Fine hardwood


Pine


Aerated concrete


Plastic pipe


PPR pipe


Hardwood


Wood panel


Hollow brick


Stainless pipe


Steel pipe

Alveolar slab

Tile

Installation of aluminium profiles

Fire protection pipe

Flexible pipe

High-density ETIS

Low-density ETIS

Ceramic

Tile

Porcelain

Aluminium

Glass

RECESSES

- Hexagonal
- Square
- PZ-Slot
- Slotted hexagonal
- PH
- Phillips hexagonal
- Allen
- TX
- Flat
- PZ

LOADS

- Light loads
- Medium loads
- High loads
- Heavy loads

CORROSION CATEGORIES

CORROSION CATEGORIES	CORROSION LEVEL	TYPICAL ENVIRONMENTS: EXAMPLES OF ISO9223		INDEX® COATINGS AVAILABLE
		INDOOR	OUTDOOR	
C1	VERY LOW	Heated spaces with low relative humidity and insignificant contamination, such as offices, schools, museums.	Dry or cold areas, atmospheric environment with very low contamination and little humid weather, such as certain deserts, central Arctic or Antarctic.	ZINC-PLATED; ZINC-PLATED BLACK; ZINC-PLATED WHITE; PHOSPHATED COATED; PLASTIC COATED
C2	LOW	Unheated spaces with variable temperature and relative humidity. Low condensation frequency and low contamination, such as storage, sports pavilions.	Temperate areas, atmospheric environment with low contamination (SO2:<5 g/m3), such as rural areas and small cities. Dry or cold areas, atmospheric environment with little humid weather, such as deserts and sub-Arctic areas.	ATLANTIS C2-H; ATLANTIS C2-M; ATLANTIS C2-L; YELLOW ZINC PLATED; BLUE ORGANIC GALVANISED
C3	MEDIUM	Spaces with moderate condensation frequency and moderate contamination from a production process, such as food processing plants, laundries, breweries, dairies.	Temperate areas, atmospheric environment with medium contamination (SO2:5µ g/m3 to 30µ g/m3) or some chloride effects, such as urban areas, coastal areas with low chloride deposition. Tropical and subtropical area, atmosphere with low contamination.	ATLANTIS C3-H; ATLANTIS C3-M; ATLANTIS C3-L; STAINLESS AISI 430
C4	HIGH	Spaces with high condensation frequency and high contamination from a production process, such as industrial processing plants.	Temperate areas, atmospheric environment with high contamination (SO2:30 g/m3 a 90 g/m3) or substantial chlorides effects, such as contaminated urban areas, industrial areas, coastal areas without salt water spray (1-10 km), or exposure to strong salinity effects. Tropical and subtropical areas, atmosphere with medium contamination.	ATLANTIS C4-M; STAINLESS A2 (AISI 304)
C5	VERY HIGH	Spaces with a very high frequency of condensation and/or high contamination from a production process, such as mines, industrial vaults, unventilated spaces in tropical and subtropical areas.	Temperate and subtropical areas, atmospheric environment with very high contamination (SO2:90 g/m3 to 250 g/m3) and/or significant chloride effects, such as industrial areas, coastal areas (0-1 km), protected installations on the coast.	STAINLESS A4 (AISI 316)

QUICK SELECTION GUIDE

ENVIRONMENTAL AND/OR ATMOSPHERIC CONDITIONS	CORROSION CATEGORIES				
	C1	C2	C3	C4	C5
INDOOR WITHOUT CONDENSATION	✓				
INDOOR WITH TEMPORARY CONDENSATION		✓			
OUTDOOR IN RURAL AREAS WITH VERY LOW CONTAMINATION		✓			
OUTDOOR WITH LOW CONTAMINATION			✓		
OUTDOOR WITH MODERATE CONCENTRATION OF CONTAMINATION				✓	
COASTAL AREAS					✓
OUTDOOR WITH STRONG INDUSTRIAL CONTAMINATION					✓
AREAS CLOSE TO ROADS					✓

* The selection indicated in the table is for expected exposures of 25 years, providing proper maintenance.

* In the case of installations with approved products, the use in these environments is not covered by European Technical Approval (ETA) of anchors, where it is established that only stainless steel anchors may be installed outdoors and assuming a working life of the anchor of at least 50 years.



METAL FIXINGS

MT



The male anchors are an effective professional solution for installing elements with high performance guarantees in cracked and non-cracked concrete. They are available in a wide range that includes, among others, anchors with European ETA 12/0397 approval for use in cracked and non-cracked concrete, C1&C2 seismic approval for fire resistance, and European ETA 05/0242 approval for use in non-cracked concrete. They are suitable for installation in both indoor and outdoor applications thanks to the coating options (ATLANTIS C3-L and zinc-plated) and materials available (A2 stainless, A4 stainless and steel).

DESIGN AND GEOMETRY



Shaft retracts as thread protection during anchor installation.



Nut. The internal threading makes it possible to fit the screw, facilitating the securing and connection of detachable elements. It is supplied pre-assembled.

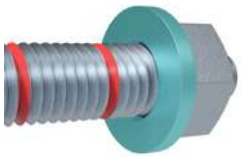

Washer. It ensures optimal precision of the element being installed. It is supplied with a pre-assembled DIN 125 washer. Optionally, it can be supplied with DIN 9021 (wide series) or DIN 440 (for wood) washers.



The lettering on the shaft indicates its length, letting you know the length of the anchor once installed. It is important to check the thickness to be fastened in order to properly choose the necessary anchor length.



Marked with the installation depth. The line painted on the shaft marks the depth recommended by the approval to insert the anchor into the drill.



Shaft edge. It allows the clip to be held in position during installation.



Expansion clip and cone. The cone retracts, expanding the clip and exerting pressure on the base material to enable fastening.



Identification. Model and measurement indicated on the clip.

APPLICATIONS





- Structural applications
- Structural beams and columns
- Stadium seats
- Wood-to-concrete structures
- Railings and fencing
- Shelving and racks
- Structural beams and columns
- Fasting of non-structural elements like signs, machines, boilers, posters, billboards, etc.
- Other installations

QUALITIES AND ADVANTAGES



MAXIMUM VERSATILITY. VARIABLE ANCHOR DEPTH

It can be installed with up to two different screwing depths in M8, M10, M12, M16* and M20*

* In the MTH zinc-plated version

MAXIMUM GUARANTEES. PRODUCTS APPROVED ACCORDING TO THE HIGHEST QUALITY STANDARDS.

- Approval ETA 12/0397 option 1 for installation in cracked and non-cracked concrete (C20/25-C50/60).
- Approval ETA 05/0242 option 7 for installation in non-cracked concrete (C20/25-C50/60).
- Seismic approval C1&C2.
- Approved for fire resistance R30-R120 in concrete.
- Confirmed suitability for the installation of sprinkler systems in accordance with the VdS CEA 4001 guidelines.

100% INDEX MANUFACTURED

This allows us to ensure a rigorous control of processes, guarantee the highest quality in our products, provide the best service and obtain a competitive global cost.

RANGE



PRODUCT	MTP	MTP-A4	MTP-X	MTP-G	MTH	MTH-A4	MTH-A2	MTA
AXIS	Z ZINC	A4 INOX	Z ZINC	ATLANTIS	Z ZINC	A4 INOX	A2 INOX	Z ZINC
CLIP	A4 INOX	A4 INOX	ATLANTIS	A4 INOX	Z ZINC	A4 INOX	A2 INOX	Z ZINC
CE	✓	✓	✓	✓				
CE					✓	✓	✓	
SEISMIC C1&C2	✓	✓	✓					
FIRE RESISTANCE	✓	✓	✓	✓	✓	✓	✓	
VdS CEA 4001	✓	✓	✓	✓				

THE PERFECT COATING ACCORDING TO THE EXPECTED LEVELS OF CORROSION

Atlantis C3-L coating: valid for dry indoor conditions (50 years) or in C3-type outdoor environments according to ISO 9223, for a period of 25 years.

Zinc coating: suitable for use in dry indoor conditions (category C1 according to ISO 923), for a period of 50 years.

A4 Stainless Steel: Suitable for indoor and outdoor applications, in coastal or industrial areas, areas exposed to high pollution levels and areas near roads.

A2 Stainless Material: valid for indoor spaces with high frequency of condensation or outdoor environments not located near coastal or highly polluted areas.

Through bolt anchor for heavy loads in cracked & uncracked concrete

MTP

SOLID

Stone | Reinforced concrete | Concrete | Cracked concrete

CODE	SEISMIC ASSESSMENT	SIZE	€/100	THICKNESS MAX. FIXTURE	AXIS LETTER (LENGTH)		
•AP08050	-	M8 x 50 Ø8	**96,890**	2	A	100	800
AP08075	-	M8 x 75 Ø8	**102,623**	9	C	100	600
AP08095	-	M8 x 95 Ø8	**108,223**	29	E	100	600
AP08115	-	M8 x 115 Ø8	**132,787**	49	G	100	400
AP10090	C1	M10 x 90 Ø10	**140,317**	10	E	100	400
AP10105	C1	M10 x 105 Ø10	**166,523**	25	F	50	300
AP10115	C1	M10 x 115 Ø10	**176,210**	35	G	50	200
AP10135	C1	M10 x 135 Ø10	**202,507**	55	H	50	200
AP10165	C1	M10 x 165 Ø10	**243,683**	85	K	50	200
AP10185	C1	M10 x 185 Ø10	**258,150**	105	L	50	150
•AP12080	-	M12 x 80 Ø12	**200,713**	4	D	50	300
AP12100	C1&C2	M12 x 100 Ø12	**220,173**	4	E	50	200
AP12110	C1&C2	M12 x 110 Ø12	**214,907**	14	F	50	200
AP12120	C1&C2	M12 x 120 Ø12	**262,467**	24	G	50	200
AP12130	C1&C2	M12 x 130 Ø12	**271,693**	34	H	50	200
AP12150	C1&C2	M12 x 150 Ø12	**320,793**	54	I	50	100
AP12180	C1&C2	M12 x 180 Ø12	**382,660**	84	L	50	150
AP12200	C1&C2	M12 x 200 Ø12	**447,700**	104	M	50	150
AP16145	C1&C2	M16 x 145 Ø16	**496,960**	28	I	25	100
AP16175	C1&C2	M16 x 175 Ø16	**641,757**	58	K	25	50
AP16220	C1&C2	M16 x 220 Ø16	**753,453**	103	O	25	50
AP16250	C1&C2	M16 x 250 Ø16	**977,097**	133	Q	25	50
AP20170	-	M20 x 170 Ø20	**969,703**	32	K	20	40
AP20200	-	M20 x 200 Ø20	**1.153,063**	62	N	20	40
AP24205	-	M24 x 205 Ø24	**2.231,480**	35	N	10	30
AP24235	-	M24 x 235 Ø24	**2.469,347**	65	P	10	20

• Non-assessed sizes

MTP

Opt.1 ETA Assessed. Zinc-plated shaft. A4 Stainless clip



02 P. 355 Technical info









STAINLESS STEEL

Stone | Reinforced concrete | Concrete | Cracked concrete

CODE	SIZE	€/100	THICKNESS MAX. FIXTURE	AXIS LETTER (LENGTH)		
APA408075	M8 x 75 Ø8	**364,020**	9	C	100	600
APA408095	M8 x 95 Ø8	**411,667**	29	E	100	600
APA408115	M8 x 115 Ø8	**539,780**	49	G	100	400
APA408135	M8 x 135 Ø8	**624,493**	69	H	50	300
APA410090	M10 x 90 Ø10	**641,667**	10	E	100	400
APA410105	M10 x 105 Ø10	**686,170**	25	F	50	300
APA410115	M10 x 115 Ø10	**755,890**	35	G	50	300
APA410135	M10 x 135 Ø10	**906,770**	55	H	50	300
APA410165	M10 x 165 Ø10	**1.082,000**	85	K	50	100
APA410185	M10 x 185 Ø10	**1.157,987**	105	L	50	100
APA412110	M12 x 110 Ø12	**931,650**	14	F	50	200
APA412120	M12 x 120 Ø12	**999,500**	24	G	50	200
APA412130	M12 x 130 Ø12	**1.085,333**	34	H	50	200
APA412150	M12 x 150 Ø12	**1.268,333**	54	I	50	100
APA412180	M12 x 180 Ø12	**1.403,000**	84	L	50	150
APA412200	M12 x 200 Ø12	**1.477,703**	104	M	50	100
APA416125	M16 x 125 Ø16	**1.918,000**	8	G	50	100
APA416145	M16 x 145 Ø16	**2.152,667**	28	I	25	100
APA416175	M16 x 175 Ø16	**2.819,333**	58	K	25	50
APA416190	M16 x 190 Ø16	**2.919,667**	73	L	25	50
APA416220	M16 x 220 Ø16	**3.109,720**	103	O	20	40
APA420200	M20 x 200 Ø20	**4.798,200**	62	M	20	40
APA420240	M20 x 240 Ø20	**5.507,167**	102	P	15	30
APA420285	M20 x 285 Ø20	**6.478,589**	147	S	10	20

MTP-A4 NEW

Opt.1 ETA Assessed. A4 Stainless steel shaft. A4 Stainless steel clip



02 P. 355 Technical info





MTP

Through bolt anchor for heavy loads in cracked & uncracked concrete

MTP-X

Opt.1 ETA Assessed. Zinc-plated shaft. ATLANTIS C3-L clip



02 P. 356 Technical info

SOLID

Stone | Reinforced concrete | Concrete | Cracked concrete

CODE	SEISMIC ASSESSMENT	SIZE	€/100	DRILL Ø	THICKNESS MAX. FIXTURE	AXIS LETTER (LENGTH)		
•APX08050	-	M8 x 50 Ø8	**82,997**	8	2	A	100	800
APX08075	C1	M8 x 75 Ø8	**87,883**	8	9	C	100	600
APX08080	C1	M8 x 80 Ø8	**90,520**	8	14	D	100	600
APX08095	C1	M8 x 95 Ø8	**95,247**	8	29	E	100	600
APX08115	C1	M8 x 115 Ø8	**116,897**	8	49	G	100	400
APX10090	C1&C2	M10 x 90 Ø10	**123,517**	10	10	E	100	400
APX10105	C1&C2	M10 x 105 Ø10	**139,950**	10	25	F	50	300
APX10115	C1&C2	M10 x 115 Ø10	**146,830**	10	35	G	50	200
APX10135	C1&C2	M10 x 135 Ø10	**182,930**	10	55	H	50	200
APX10165	C1&C2	M10 x 165 Ø10	**213,573**	10	85	K	50	200
APX10185	C1&C2	M10 x 185 Ø10	**235,843**	10	105	L	50	150
•APX12080	-	M12 x 80 Ø12	**166,903**	12	4	D	50	300
APX12100	C1&C2	M12 x 100 Ø12	**184,067**	12	4	E	50	200
APX12110	C1&C2	M12 x 110 Ø12	**188,223**	12	14	F	50	200
APX12120	C1&C2	M12 x 120 Ø12	**235,843**	12	24	G	50	200
APX12130	C1&C2	M12 x 130 Ø12	**246,423**	12	34	H	50	200
APX12150	C1&C2	M12 x 150 Ø12	**269,103**	12	54	I	50	100
APX12180	C1&C2	M12 x 180 Ø12	**337,137**	12	84	L	50	150
APX12200	C1&C2	M12 x 200 Ø12	**393,073**	12	104	M	50	150
APX12220	C1&C2	M12 x 220 Ø12	**412,727**	12	124	O	25	50
APX12255	C1&C2	M12 x 255 Ø12	**453,997**	12	159	R	25	50
APX16145	C1	M16 x 145 Ø16	**477,733**	16	28	I	25	100
APX16175	C1	M16 x 175 Ø16	**559,370**	16	58	K	25	50
APX16220	C1	M16 x 220 Ø16	**657,640**	16	103	O	25	50
APX16250	C1	M16 x 250 Ø16	**846,617**	16	133	Q	25	50
APX20170	C1&C2	M20 x 170 Ø20	**854,173**	20	32	K	20	40
APX20200	C1&C2	M20 x 200 Ø20	**975,120**	20	62	M	20	40

• Non-assessed sizes



Also available with DIN 9021 washer

Ask for price and delivery time



DO-MT

Setting tool PAG. 47

MTP-G

Opt.1 ETA Assessed. ATLANTIS C3-L shaft. A4 Stainless steel clip



02 P. 356 Technical info

SOLID

Stone | Reinforced concrete | Concrete | Cracked concrete

CODE	SIZE	€/100	THICKNESS MAX. FIXTURE	AXIS LETTER (LENGTH)		
•APG06060	M6 x 60 Ø6	**76,007**	10	B	200	1.200
•APG06070	M6 x 70 Ø6	**78,340**	20	C	200	1.200
•APG06100	M6 x 100 Ø6	**85,927**	50	E	200	800
•APG08050	M8 x 50 Ø8	**100,403**	2	A	100	800
•APG08060	M8 x 60 Ø8	**99,063**	12	B	100	800
APG08075	M8 x 75 Ø8	**117,997**	9	C	100	600
APG08095	M8 x 95 Ø8	**127,550**	29	E	100	600
APG08115	M8 x 115 Ø8	**147,490**	49	G	100	400
•APG10070	M10 x 70 Ø10	**154,260**	5	C	100	400
APG10090	M10 x 90 Ø10	**177,707**	10	E	100	400
APG10105	M10 x 105 Ø10	**192,033**	25	F	50	300
APG10115	M10 x 115 Ø10	**201,863**	35	G	50	200
APG10135	M10 x 135 Ø10	**221,990**	55	H	50	200
APG10165	M10 x 165 Ø10	**272,797**	85	K	50	200
APG10185	M10 x 185 Ø10	**294,970**	105	L	50	150
•APG12080	M12 x 80 Ø12	**267,967**	4	D	50	300
APG12110	M12 x 110 Ø12	**308,553**	14	F	50	200
APG12130	M12 x 130 Ø12	**365,920**	34	H	50	200
APG12150	M12 x 150 Ø12	**391,287**	54	I	50	100
APG12180	M12 x 180 Ø12	**435,873**	84	L	50	150
APG12200	M12 x 200 Ø12	**425,010**	104	M	50	150
APG16125	M16 x 125 Ø16	**597,467**	8	G	25	100
APG16145	M16 x 145 Ø16	**631,877**	28	I	25	100
APG16175	M16 x 175 Ø16	**694,827**	58	K	25	50
APG16220	M16 x 220 Ø16	**863,987**	103	O	25	50
APG20170	M20 x 170 Ø20	**1.074,573**	32	K	20	40
APG20200	M20 x 200 Ø20	**1.084,887**	62	M	20	40

• Non-assessed sizes



DO-MT

Setting tool PAG. 47

Through bolt anchor for heavy loads in uncracked concrete

MTH

SOLID

Stone | Reinforced concrete | Concrete

MTH

Opt.7 ETA Assessed. Zinc-plated shaft. Zinc-plated clip



02 P. 357 Technical info

CODE	SIZE	€/100	THICKNESS MAX. FIXTURE	AXIS LETTER (LENGTH)		
• AH06060	M6 x 60 Ø6	**54,337**	2	B	200	1.200
• AH06070	M6 x 70 Ø6	**56,410**	12	C	200	1.200
• AH06080	M6 x 80 Ø6	**58,470**	22	D	200	1.200
• AH06090	M6 x 90 Ø6	**60,257**	32	E	200	1.200
• AH06100	M6 x 100 Ø6	**62,770**	42	E	200	800
• AH06110	M6 x 110 Ø6	**81,843**	52	F	200	800
• AH06120	M6 x 120 Ø6	**85,923**	62	G	100	600
• AH06130	M6 x 130 Ø6	**99,397**	72	H	100	600
• AH06140	M6 x 140 Ø6	**100,107**	82	I	100	400
• AH06150	M6 x 150 Ø6	**102,717**	92	I	100	400
• AH06160	M6 x 160 Ø6	**110,663**	102	J	100	400
• AH06170	M6 x 170 Ø6	**125,480**	112	K	100	400
• AH06180	M6 x 180 Ø6	**137,860**	122	L	100	200
AH08060	M8 x 60 Ø8	**67,257**	3	B	100	600
AH08075	M8 x 75 Ø8	**71,113**	5	C	100	600
AH08090	M8 x 90 Ø8	**77,090**	20	E	100	600
AH08100	M8 x 100 Ø8	**82,257**	30	E	100	400
AH08115	M8 x 115 Ø8	**96,510**	45	G	100	400
AH08120	M8 x 120 Ø8	**105,617**	50	G	100	400
AH08130	M8 x 130 Ø8	**111,207**	60	H	100	400
AH08155	M8 x 155 Ø8	**168,687**	85	J	100	200
AH10070	M10 x 70 Ø10	**88,063**	3	C	100	400
AH10080	M10 x 80 Ø10	**100,700**	13	D	100	400
AH10090	M10 x 90 Ø10	**104,997**	10	E	100	400
AH10100	M10 x 100 Ø10	**121,067**	20	E	100	400
AH10120	M10 x 120 Ø10	**127,023**	40	G	50	300
AH10140	M10 x 140 Ø10	**158,793**	60	H	50	200
AH10150	M10 x 150 Ø10	**165,193**	70	I	50	200
AH10160	M10 x 160 Ø10	**188,113**	80	J	50	200
AH10170	M10 x 170 Ø10	**209,773**	90	K	50	200
AH10210	M10 x 210 Ø10	**253,780**	130	N	50	150
AH10230	M10 x 230 Ø10	**269,183**	150	P	50	100
AH12090	M12 x 90 Ø12	**144,390**	13	E	50	200
AH12100	M12 x 100 Ø12	**156,067**	8	E	50	200
AH12110	M12 x 110 Ø12	**161,466**	18	F	50	200
AH12120	M12 x 120 Ø12	**200,333**	28	G	50	200
AH12130	M12 x 130 Ø12	**208,863**	38	H	50	200
AH12140	M12 x 140 Ø12	**209,340**	48	H	50	200
AH12160	M12 x 160 Ø12	**246,013**	68	J	50	100
AH12180	M12 x 180 Ø12	**286,063**	88	L	50	150
AH12200	M12 x 200 Ø12	**334,060**	108	M	50	100
AH12220	M12 x 220 Ø12	**362,550**	128	O	50	100
AH12250	M12 x 250 Ø12	**443,203**	158	Q	25	50
AH14120	M14 x 120 Ø14	**345,747**	12	G	25	100
AH14145	M14 x 145 Ø14	**405,997**	37	I	25	100
AH14170	M14 x 170 Ø14	**433,747**	62	K	25	100
AH14220	M14 x 220 Ø14	**601,427**	112	O	25	75
AH14250	M14 x 250 Ø14	**671,790**	142	Q	25	50
AH16125	M16 x 125 Ø16	**354,730**	3	G	25	100
AH16145	M16 x 145 Ø16	**382,247**	23	I	25	100
AH16170	M16 x 170 Ø16	**472,703**	48	K	25	50
AH16220	M16 x 220 Ø16	**563,287**	98	O	25	50
AH16250	M16 x 250 Ø16	**730,450**	128	Q	25	50
AH16280	M16 x 280 Ø16	**795,157**	158	S	25	50
AH20170	M20 x 170 Ø20	**698,093**	23	K	20	40
AH20220	M20 x 220 Ø20	**869,227**	73	O	20	40
AH20270	M20 x 270 Ø20	**1.187,933**	123	S	20	40

• Non-assessed sizes for Fire Resist

Self-Service

CODE	SIZE	€/BAG	PCS.	BAGS
LSAH06060	M6 x 60 Ø6	**15,263**	30	6
LSAH08060	M8 x 60 Ø8	**12,529**	20	6
LSAH08075	M8 x 75 Ø8	**11,202**	16	6
LSAH08090	M8 x 90 Ø8	**10,602**	14	6
LSAH10070	M10 x 70 Ø10	**9,255**	10	5
LSAH10090	M10 x 90 Ø10	**8,320**	8	6
LSAH10120	M10 x 120 Ø10	**8,098**	6	6
LSAH12090	M12 x 90 Ø12	**9,938**	6	5
LSAH12110	M12 x 110 Ø12	**10,377**	6	5
LSAH16125	M16 x 125 Ø16	**7,429**	2	6

MTH

Through bolt anchor for heavy loads in uncracked concrete

MTH-A4

Opt.7 ETA Assessed. A4 Stainless steel shaft. A4 Stainless steel clip



02 P. 358 Technical info

STAINLESS STEEL

Stone | Reinforced concrete | Concrete

CODE	SIZE	€/100	THICKNESS MAX. FIXTURE	AXIS LETTER (LENGTH)		
•• MIA406045	M6 x 45 Ø6	**198,050**	1	A	200	1.200
• MIA406060	M6 x 60 Ø6	**215,763**	2	B	200	1.200
• MIA406080	M6 x 80 Ø6	**229,800**	22	D	200	1.200
• MIA408050	M8 x 50 Ø8	**238,740**	4	A	100	800
MIA408075	M8 x 75 Ø8	**253,527**	5	C	100	600
MIA408090	M8 x 90 Ø8	**282,907**	20	E	100	600
MIA408115	M8 x 115 Ø8	**371,653**	45	G	100	400
MIA410070	M10 x 70 Ø10	**415,217**	3	C	100	400
MIA410090	M10 x 90 Ø10	**470,627**	10	D	100	400
MIA410120	M10 x 120 Ø10	**572,090**	40	G	50	300
MIA410150	M10 x 150 Ø10	**811,337**	70	I	50	200
• MIA412075	M12 x 75 Ø12	**620,927**	5	C	50	300
MIA412090	M12 x 90 Ø12	**625,313**	13	D	50	200
MIA412110	M12 x 110 Ø12	**684,030**	12	F	50	200
MIA412140	M12 x 140 Ø12	**820,253**	42	I	50	200
• MIA416090	M16 x 90 Ø16	**1.483,607**	4	D	25	150
MIA416145	M16 x 145 Ø16	**1.832,207**	23	I	25	100
MIA416170	M16 x 170 Ø16	**2.115,780**	48	K	25	75
• MIA420120	M20 x 120 Ø20	**2.459,464**	5	G	20	40
MIA420170	M20 x 170 Ø20	**3.361,992**	23	K	20	40
MIA420220	M20 x 220 Ø20	**4.185,353**	73	O	20	40

• Non-assessed sizes
• Non-assessed sizes for Fire Resistence



Also available with DIN 9021 washer

Ask for price and delivery time



DO-MT

Setting tool PAG. 47

Window Box

CODE	SIZE	€/BOX	PCS.	BOXES
VMIA408075	M8 x 75 Ø8	**34,754**	10	8
VMIA410090	M10 x 90 Ø10	**47,562**	8	8
VMIA412110	M12 x 110 Ø12	**54,416**	6	8

Self-Service

CODE	SIZE	€/BAG	PCS.	BAGS
LSMIA408075	M8 x 75 Ø8	**38,350**	12	7
LSMIA410090	M10 x 90 Ø10	**50,066**	8	7
LSMIA412110	M12 x 110 Ø12	**54,502**	6	5



Through bolt anchor for heavy loads in uncracked concrete

MTH

STAINLESS STEEL

Stone | Reinforced concrete | Concrete

CODE	SIZE	€/100	THICKNESS MAX. FIXTURE	AXIS LETTER (LENGTH)		
•MI06045	M6 x 45 Ø6	**161,603**	1	A	200	1.200
•MI06060	M6 x 60 Ø6	**181,233**	2	B	200	1.200
•MI06080	M6 x 80 Ø6	**189,553**	22	D	200	1.200
•MI06120	M6 x 120 Ø6	**226,723**	62	G	100	600
•MI06140	M6 x 140 Ø6	**286,957**	82	I	100	600
•MI06160	M6 x 160 Ø6	**321,420**	102	J	100	400
•MI06170	M6 x 170 Ø6	**360,995**	112	K	100	400
•MI06180	M6 x 180 Ø6	**391,449**	122	L	100	300
•MI08050	M8 x 50 Ø8	**195,990**	4	A	100	800
MI08075	M8 x 75 Ø8	**214,680**	5	C	100	600
MI08090	M8 x 90 Ø8	**244,303**	20	E	100	600
MI08115	M8 x 115 Ø8	**316,020**	45	G	100	400
MI10070	M10 x 70 Ø10	**332,170**	3	C	100	400
MI10090	M10 x 90 Ø10	**371,820**	10	D	100	400
MI10120	M10 x 120 Ø10	**435,813**	40	G	50	300
MI10150	M10 x 150 Ø10	**610,167**	70	I	50	200
•MI12075	M12 x 75 Ø12	**503,667**	5	C	50	300
MI12090	M12 x 90 Ø12	**504,820**	13	D	50	200
MI12110	M12 x 110 Ø12	**546,373**	18	F	50	200
MI12140	M12 x 140 Ø12	**684,810**	48	I	50	200
•MI16090	M16 x 90 Ø16	**1.223,710**	4	D	25	150
MI16145	M16 x 145 Ø16	**1.428,494**	23	I	25	100
MI16170	M16 x 170 Ø16	**1.566,360**	48	K	25	75
•MI20120	M20 x 120 Ø20	**1.957,302**	5	G	20	40
MI20170	M20 x 170 Ø20	**2.432,095**	23	K	20	40
MI20220	M20 x 220 Ø20	**3.141,695**	73	O	20	40

• Non-assessed sizes
• Non-assessed sizes for Fire Resistence

MTH-A2

Opt.7 ETA Assessed. A2 Stainless steel shaft. A2 Stainless steel clip



02 P. 358 Technical info



Blister

CODE	SIZE	€/BAG	PCS.	BAGS
BZMI08075	M8 x 75 Ø8	**4,622**	2	12
BZMI10090	M10 x 90 Ø10	**4,622**	2	10

Window Box

CODE	SIZE	€/BOX	PCS.	BOXES
VMI08075	M8 x 75 Ø8	**31,479**	10	8
VMI08090	M8 x 90 Ø8	**33,657**	10	8
VMI10070	M10 x 70 Ø10	**34,779**	8	8
VMI10090	M10 x 90 Ø10	**38,931**	8	8
VMI10120	M10 x 120 Ø10	**34,224**	6	8
VMI12110	M12 x 110 Ø12	**42,459**	6	8

Self-Service

CODE	SIZE	€/BAG	PCS.	BAGS
LSMI08075	M8 x 75 Ø8	**31,948**	12	7
LSMI08090	M8 x 90 Ø8	**36,352**	12	7
LSMI10070	M10 x 70 Ø10	**39,130**	10	6
LSMI10090	M10 x 90 Ø10	**38,931**	8	6
LSMI10120	M10 x 120 Ø10	**41,070**	8	6
LSMI12110	M12 x 110 Ø12	**42,459**	6	6

MTH RANGE _*ALL GOOD THINGS COME IN THREES.*

A desire to fully respond to the needs of clients has pushed us to improve and expand our range of MTH approved structural anchors.

MTH

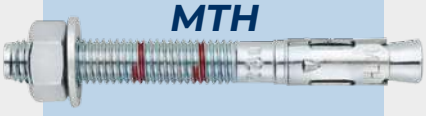

ZINC PLATED

IMPROVED FEATURES
40% STRONGER

MTH-A2



STAINLESS STEEL A2

NEW IN THE MARKET

MTH-A4



STAINLESS STEEL A4

HIGH PERFORMING

With the launch of the new stainless MTH-A2 anchor with ETA assessment for approval in option 7, we become the first in the market to manufacture and distribute such an extensive range for this anchor. Moreover, the improvements included in the new design have enabled it to have 40% better load performance in all three versions (zinc-plated, A2 stainless and A4 stainless).

European Technical Assessment

MTA

Through bolt anchor for heavy loads

MTA

Zinc-plated shaft. Zinc-plated clip



02 P. 359 Technical info

SOLID | Stone | Reinforced concrete | Concrete | kg. | ZINC

CODE	SIZE	€/100	THICKNESS MAX. FIXTURE		
AM06045	M6 x 45 Ø6	**40,680**	1	200	1.200
AM06055	M6 x 55 Ø6	**44,157**	11	200	1.200
AM06060	M6 x 60 Ø6	**43,750**	2	200	1.200
AM06065	M6 x 65 Ø6	**44,287**	7	200	1.200
AM06070	M6 x 70 Ø6	**45,427**	12	200	1.200
AM06080	M6 x 80 Ø6	**47,573**	22	200	1.200
AM06085	M6 x 85 Ø6	**49,603**	27	200	1.200
AM06090	M6 x 90 Ø6	**50,180**	32	200	1.200
AM06100	M6 x 100 Ø6	**52,287**	42	200	800
AM06110	M6 x 110 Ø6	**57,043**	52	200	800
AM06120	M6 x 120 Ø6	**60,187**	62	100	600
AM06130	M6 x 130 Ø6	**60,400**	72	100	600
AM06140	M6 x 140 Ø6	**75,037**	82	100	600
AM06150	M6 x 150 Ø6	**85,790**	92	100	600
AM06160	M6 x 160 Ø6	**91,617**	102	100	400
AM06170	M6 x 170 Ø6	**115,033**	112	100	400
AM06180	M6 x 180 Ø6	**121,857**	122	100	300
AM08050	M8 x 50 Ø8	**51,300**	4	100	800
AM08060	M8 x 60 Ø8	**52,377**	3	100	800
AM08065	M8 x 65 Ø8	**55,130**	8	100	600
AM08075	M8 x 75 Ø8	**56,190**	5	100	600
AM08090	M8 x 90 Ø8	**61,130**	20	100	600
AM08115	M8 x 115 Ø8	**74,067**	45	100	400
AM08120	M8 x 120 Ø8	**75,483**	50	100	400
AM08130	M8 x 130 Ø8	**86,853**	60	100	400
AM08155	M8 x 155 Ø8	**150,347**	85	100	200
AM10065	M10 x 65 Ø10	**79,270**	1	100	400
AM10070	M10 x 70 Ø10	**74,587**	3	100	400
AM10080	M10 x 80 Ø10	**79,603**	13	100	400
AM10090	M10 x 90 Ø10	**83,083**	10	100	400
AM10100	M10 x 100 Ø10	**91,767**	20	100	400
AM10120	M10 x 120 Ø10	**99,657**	40	50	300
AM10140	M10 x 140 Ø10	**113,110**	60	50	200
AM10150	M10 x 150 Ø10	**127,243**	70	50	200
AM10160	M10 x 160 Ø10	**158,877**	80	50	200
AM10170	M10 x 170 Ø10	**166,173**	90	50	200
AM10210	M10 x 210 Ø10	**230,247**	130	50	150
AM10230	M10 x 230 Ø10	**260,983**	150	50	100
AM12075	M12 x 75 Ø12	**113,821**	5	50	300
AM12080	M12 x 80 Ø12	**118,377**	3	50	300
AM12090	M12 x 90 Ø12	**122,330**	13	50	200
AM12100	M12 x 100 Ø12	**126,327**	8	50	200
AM12110	M12 x 110 Ø12	**127,720**	18	50	200
AM12120	M12 x 120 Ø12	**152,300**	28	50	200
AM12140	M12 x 140 Ø12	**170,107**	48	50	200
AM12160	M12 x 160 Ø12	**194,697**	68	50	100
AM12180	M12 x 180 Ø12	**226,137**	88	50	150
AM12220	M12 x 220 Ø12	**296,683**	128	50	100
AM12250	M12 x 250 Ø12	**367,770**	158	25	50
AM14080	M14 x 80 Ø14	**222,417**	5	50	200
AM14100	M14 x 100 Ø14	**255,310**	5	50	100
AM14120	M14 x 120 Ø14	**286,327**	12	25	100
AM14145	M14 x 145 Ø14	**348,997**	37	25	100
AM14170	M14 x 170 Ø14	**379,640**	62	25	100
AM14220	M14 x 220 Ø14	**506,187**	112	25	75
AM14250	M14 x 250 Ø14	**555,363**	142	25	50
AM16090	M16 x 90 Ø16	**271,303**	4	25	150
AM16110	M16 x 110 Ø16	**274,263**	7	25	150
AM16125	M16 x 125 Ø16	**280,737**	3	25	100
AM16145	M16 x 145 Ø16	**301,010**	23	25	100
AM16170	M16 x 170 Ø16	**376,007**	48	25	50
AM16220	M16 x 220 Ø16	**456,183**	98	25	50
AM16250	M16 x 250 Ø16	**608,997**	128	25	50
AM16280	M16 x 280 Ø16	**662,910**	158	25	50



Also available with DIN 9021 washer

Ask for price and delivery time



DO-MT

Setting tool

PAG. 47



More range next page

INDEX A PERFECT FIXING

Through bolt anchor for heavy loads

MTA

CODE	SIZE	€/100	THICKNESS MAX. FIXTURE		
AM20120	M20 x 120 Ø20	**462,253**	5	20	40
AM20170	M20 x 170 Ø20	**554,300**	23	20	40
AM20220	M20 x 220 Ø20	**704,220**	73	20	40
AM20270	M20 x 270 Ø20	**943,233**	123	20	40
AM24180	M24 x 180 Ø24	**1.573,100**	10	10	20
AM24260	M24 x 260 Ø24	**1.992,453**	80	10	20

Blister

CODE	SIZE	€/BAG	PCS.	BAGS
BZAM06060	M6 x 60 Ø6	**3,427**	2	20
BZAM06080	M6 x 80 Ø6	**3,427**	2	20
BZAM08050	M8 x 50 Ø8	**3,427**	2	15
BZAM08075	M8 x 75 Ø8	**3,427**	2	15
BZAM08090	M8 x 90 Ø8	**3,427**	2	15
BZAM10070	M10 x 70 Ø10	**3,427**	2	12
BZAM10090	M10 x 90 Ø10	**3,427**	2	12
BZAM10120	M10 x 120 Ø10	**3,427**	2	12
BZAM12090	M12 x 90 Ø12	**3,427**	2	10
BZAM12110	M12 x 110 Ø12	**3,427**	2	10
BZAM12140	M12 x 140 Ø12	**3,427**	2	10

Window Box

CODE	SIZE	€/BOX	PCS.	BOXES
VAM06060	M6 x 60 Ø6	**9,633**	20	8
VAM08075	M8 x 75 Ø8	**8,058**	12	8
VAM08090	M8 x 90 Ø8	**8,566**	12	8
VAM10070	M10 x 70 Ø10	**5,405**	6	8
VAM10090	M10 x 90 Ø10	**5,988**	6	8
VAM10120	M10 x 120 Ø10	**7,118**	6	8
VAM12090	M12 x 90 Ø12	**8,736**	6	8
VAM12110	M12 x 110 Ø12	**9,129**	6	8

MTA

Zinc-plated shaft. Zinc-plated clip



02 P. 359 Technical info

INDEX CAL

More range previous page

Tie wire anchor

TWA

SOLID

Stone | Reinforced concrete | Concrete

CODE	SIZE	€/100		
TWA06060	6 x 60 Ø6	**33,230**	100	2.400



Setting tool for MT family

DO-MT

SOLID

A4 INOX

CODE	SIZE	€/PC		
DOMTA10	M6 - M8 - M10	**13,097**	5	225
DOMTA20	M12 - M14 - M16 - M20	**21,831**	5	225



TH | TF



The approved high-performance anchors for direct fastening in cracked and non-cracked concrete are the most professional and effective solution. Its design allows quick and easy installation, guaranteeing maximum performance and higher load values compared to the previous version. The assortment of TH/TF anchors consists of different models of heads, suitable for installation in structural and non-structural elements such as railings, shelves or elements that need to be uninstalled or adjusted.

DESIGN AND GEOMETRY



Patented double thread, designed to be deeply embedded in the concrete and guarantee maximum loads.



THE/TFE Head: **Embossed ribbed washer in hexagonal versions**, which ensures a tightness against the base material, preventing the fastening from loosening.



Head: **Measurement embossed on the head** (except Ø5). Allows the identification of the size installed.



The **tempered tip** ensures greater hardness, durability and ease of installation.

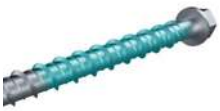

High-resistance embossed **carbon steel body.**

QUALITIES AND ADVANTAGES

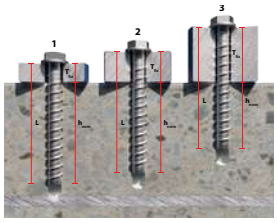

+ VERSATILITY

Allows **installation with up to three different screwing depths** (in the Ø10 version).

Additionally, **it can be unscrewed** to level it or correctly adjust the installed element.

HIGHEST GUARANTEES

- Approved (ETA 20/0046) in option 1 for installation in cracked and non-cracked concrete (C20/25-C50/60).
- Approved (ETA 20/0494) for non-structural redundant systems in concrete (C20/25) and hollow-core slabs (≥ C30/37).
- Approved for fire resistance R30-R120 in concrete.
- C1&C2 seismic approval.
- Confirmed suitability for the installation of sprinkler systems in accordance with the VdS CEA 4001 guidelines.

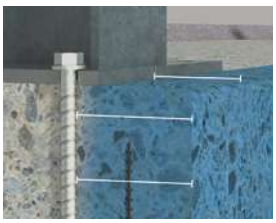

+ PRODUCTIVITY

- It generates low loads on the concrete, allowing the **use of smaller metrics** and, consequently, make installations with reduced distances between anchors and at the edge of the concrete element..
- **No torque wrench required**. It allows us to make sure that it is always perfectly installed.
- **EXPRESS installation**. It only requires a drill and an impact machine.

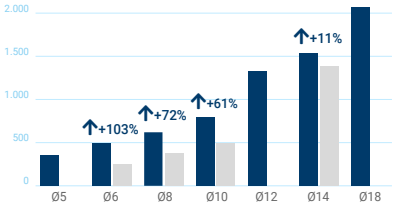

MAXIMUM PERFORMANCE AND GREATER LOAD VALUES WITH RESPECT TO THE PREVIOUS VERSION

THE (new)
THDEX (old)

RANGE



PRODUCT	THE	THA	THP	THT	TFE	TFN	TFS	TFM	TFF
TYPE OF HEAD	Hexagonal	Countersunk	Panhead	Truss	Hexagonal	Hexagonal without washer	Stud	Male thread	Female thread
COATING	ATLANTIS	ATLANTIS	ATLANTIS	ATLANTIS	ZINC	ZINC	ZINC	ZINC	ZINC
CE	✓	✓	✓	✓	✓	✓	✓	✓	✓
CE NON STRUCTURAL FIXINGS	✓	✓	✓	✓	✓	✓	✓	✓	✓
SEISMIC C1&C2	✓	✓			✓	✓	✓		
SEISMIC C1			✓	✓					
FIRE RESISTANCE	✓	✓	✓	✓	✓	✓	✓	✓	✓
VdS CEA 4001	✓	✓	✓	✓	✓	✓	✓	✓	✓

APPLICATIONS



Applications for ETA 20/0046 version (installations in cracked and uncracked concrete)

- Structural applications.
- Awnings or temporary signs.
- Stadium seats.
- Wood to concrete structures.
- Railings and fences.
- Shelves and racks.
- Structural beams and pillars.



Applications for approved version ETA 20/0494 (non-structural installations)

- Fastening of tubes.
- Air conditioning conduits.
- Electrical trays or wiring systems.
- Installations in hollow concrete ceilings.
- Installations in hollow-core slab ceilings.

100% INDEX MANUFACTURED

This allows us to ensure a rigorous control of processes, guarantee the highest quality in our products, provide the best service and obtain a competitive global cost.

THE PERFECT COATING ACCORDING TO THE EXPECTED LEVELS OF CORROSION

Atlantis C3-H coating: valid for dry indoor conditions (50 years) or in C3-type outdoor environments according to ISO 9223, for a period of 25 years.

Zinc coating: suitable for use in dry indoor conditions (category C1 according to ISO 923), for a period of 50 years.

Self-tapping concrete screwbolt TH/TF

SOLID

Stone | Reinforced concrete | Cracked concrete | Concrete

THE

Hexagon head. ATLANTIS C3-H coating. Opt.1 ETA Assessed



02 P. 360 Technical info

CODE	SEISMIC ASSESSMENT	DRILL Ø X LENGTH	€/100		THICKNESS MAX. FIXTURE		
THE05040	-	Ø5 x 40	**42,653**	8	5	100	2.400
THE05050	-	Ø5 x 50	**49,470**	8	5	100	1.600
THE05060	-	Ø5 x 60	**52,833**	8	15	100	1.600
THE05080	-	Ø5 x 80	**69,300**	8	35	50	800
THE05100	-	Ø5 x 100	**80,563**	8	55	50	800
THE06040	-	Ø6 x 40	**54,133**	10	5	100	1.600
THE06050	-	Ø6 x 50	**58,487**	10	15	100	1.200
THE06060	C1	Ø6 x 60	**65,127**	10	5	100	1.200
THE06070	C1	Ø6 x 70	**72,180**	10	15	50	600
THE06080	C1	Ø6 x 80	**81,160**	10	25	50	800
THE06100	C1	Ø6 x 100	**102,000**	10	45	25	400
THE06120	C1	Ø6 x 120	**116,280**	10	65	25	400
THE08055	C1 & C2	Ø8 x 55	**108,957**	13	5	50	600
THE08060	C1 & C2	Ø8 x 60	**111,120**	13	10	50	600
THE08070	C1 & C2	Ø8 x 70	**122,583**	13	5	50	200
THE08080	C1 & C2	Ø8 x 80	**137,297**	13	15	25	400
THE08090	C1 & C2	Ø8 x 90	**148,200**	13	25	25	400
THE08100	C1 & C2	Ø8 x 100	**156,430**	13	35	25	400
THE08110	C1 & C2	Ø8 x 110	**163,487**	13	45	25	400
THE08120	C1 & C2	Ø8 x 120	**224,593**	13	55	25	400
THE08140	C1 & C2	Ø8 x 140	**231,140**	13	75	25	300
THE10060	C1 & C2	Ø10 x 60	**205,840**	15	5	50	200
THE10070	C1 & C2	Ø10 x 70	**223,400**	15	15	50	200
THE10080	C1 & C2	Ø10 x 80	**240,357**	15	25	50	300
THE10090	C1 & C2	Ø10 x 90	**248,767**	15	5	25	300
THE10100	C1 & C2	Ø10 x 100	**256,720**	15	15	25	300
THE10120	C1 & C2	Ø10 x 120	**295,040**	15	35	25	200
THE10140	C1 & C2	Ø10 x 140	**327,310**	15	55	25	100
THE12080	-	Ø12 x 90	**310,033**	18	15	25	100
THE12090	-	Ø12 x 80	**331,240**	18	5	25	100
THE12110	C1 & C2	Ø12 x 110	**378,433**	18	5	25	100
THE12130	C1 & C2	Ø12 x 130	**435,133**	18	25	25	150
THE12150	C1 & C2	Ø12 x 150	**482,057**	18	45	25	100
THE14080	-	Ø14 x 80	**475,077**	21	5	25	150
THE14100	-	Ø14 x 100	**564,157**	21	25	25	150
THE14120	C1 & C2	Ø14 x 120	**657,433**	21	5	25	100
THE14130	C1 & C2	Ø14 x 130	**745,843**	21	15	25	100
THE14140	C1 & C2	Ø14 x 140	**803,217**	21	25	25	100
THE14160	C1 & C2	Ø14 x 160	**873,857**	21	45	25	50
THE18100	-	Ø18 x 100	**947,020**	24	10	20	80
THE18130	-	Ø18 x 130	**1.105,277**	24	40	20	40
THE18160	C1 & C2	Ø18 x 160	**1.288,433**	24	20	15	30
THE18180	C1 & C2	Ø18 x 180	**1.393,930**	24	40	15	30
THE18200	C1 & C2	Ø18 x 200	**1.528,777**	24	60	10	20

TH/TF

Self-tapping concrete screwbolt

THA

Countersunk head. ATLANTIS C3-H coating. Opt.1 ETA Assessed



02 P. 361 Technical info

SOLID

Stone | Reinforced concrete | Cracked concrete | Concrete

CODE	SEISMIC ASSESSMENT	DRILL Ø X LENGTH	€/100		THICKNESS MAX. FIXTURE		
THA05040	-	Ø5 x 40	**50,353**	25	5	100	2.400
THA05060	-	Ø5 x 60	**59,310**	25	15	100	1.200
THA05080	-	Ø5 x 80	**75,167**	25	35	50	800
THA05100	-	Ø5 x 100	**84,733**	25	55	50	800
THA06045	-	Ø6 x 45	**70,240**	30	10	100	1.600
THA06050	-	Ø6 x 50	**73,240**	30	15	100	1.200
THA06060	C1	Ø6 x 60	**86,113**	30	5	100	1.200
THA06080	C1	Ø6 x 80	**103,723**	30	25	100	600
THA06120	C1	Ø6 x 120	**116,513**	30	65	100	400
THA06140	C1	Ø6 x 140	**149,373**	30	85	100	600
THA08060	C1 & C2	Ø8 x 60	**141,860**	45	10	50	200
THA08080	C1 & C2	Ø8 x 80	**172,387**	45	15	25	400
THA08100	C1 & C2	Ø8 x 100	**207,333**	45	35	25	400
THA08120	C1 & C2	Ø8 x 120	**232,670**	45	55	25	400
THA10100	C1 & C2	Ø10 x 100	**314,080**	50	15	25	300
THA10120	C1 & C2	Ø10 x 120	**364,597**	50	35	25	200

THP

Pan head. ATLANTIS C3-H coating. Opt.1 ETA Assessed



02 P. 361 Technical info

PATENTED

SOLID

Stone | Reinforced concrete | Cracked concrete | Concrete

CODE	SEISMIC ASSESSMENT	DRILL Ø X LENGTH	€/100		THICKNESS MAX. FIXTURE		
THP05040	-	Ø5 x 40	**49,610**	30	5	100	2.400
THP05060	-	Ø5 x 60	**57,073**	30	5	100	1.200
THP06040	-	Ø6 x 40	**59,650**	40	5	100	1.200
THP06050	-	Ø6 x 50	**70,340**	40	15	100	1.200
THP06060	C1	Ø6 x 60	**80,187**	40	5	100	1.200
THP06080	C1	Ø6 x 80	**99,437**	40	25	50	600
THP06100	C1	Ø6 x 100	**118,073**	40	45	50	200
THP08060	C1 & C2	Ø8 x 60	**140,897**	45	10	25	400
THP08080	C1 & C2	Ø8 x 80	**163,707**	45	15	25	300

THT

Truss head. ATLANTIS C3-H coating. Opt.1 ETA Assessed



02 P. 361 Technical info

PATENTED

SOLID

Stone | Reinforced concrete | Cracked concrete | Concrete

CODE	SEISMIC ASSESSMENT	DRILL Ø X LENGTH	€/100		THICKNESS MAX. FIXTURE		
THT06040	-	Ø6 x 40	**77,593**	30	5	100	1.600
THT06050	-	Ø6 x 50	**92,370**	30	15	100	1.200
THT06060	C1	Ø6 x 60	**105,303**	30	5	100	400

Self-tapping concrete screwbolt TH/TF

TFE

Hexagon head.Zinc-plated coating. Opt.1 ETA Assessed



02 P. 361 Technical info

SOLID | Stone | Reinforced concrete | Cracked concrete | Concrete

CODE	SEISMIC ASSESSMENT	DRILL Ø X LENGTH	€/100		THICKNESS MAX. FIXTURE		
TFE05040	-	Ø5 x 40	**36,347**	8	5	100	2.400
TFE05050	-	Ø5 x 50	**42,157**	8	5	100	1.600
TFE05060	-	Ø5 x 60	**45,027**	8	15	100	1.600
TFE05080	-	Ø5 x 80	**59,057**	8	35	50	800
TFE05100	-	Ø5 x 100	**68,653**	8	55	50	800
TFE06040	-	Ø6 x 40	**46,130**	10	5	100	1.600
TFE06050	-	Ø6 x 50	**49,840**	10	15	100	1.200
TFE06060	C1	Ø6 x 60	**55,500**	10	5	100	1.200
TFE06070	C1	Ø6 x 70	**61,513**	10	15	50	600
TFE06080	C1	Ø6 x 80	**69,160**	10	25	50	800
TFE06100	C1	Ø6 x 100	**86,927**	10	45	25	400
TFE06120	C1	Ø6 x 120	**99,093**	10	65	25	400
TFE08055	C1 & C2	Ø8 x 55	**88,820**	13	5	50	600
TFE08060	C1 & C2	Ø8 x 60	**90,587**	13	10	50	600
TFE08070	C1 & C2	Ø8 x 70	**99,930**	13	5	50	200
TFE08080	C1 & C2	Ø8 x 80	**111,917**	13	15	25	400
TFE08090	C1 & C2	Ø8 x 90	**120,807**	13	25	25	400
TFE08100	C1 & C2	Ø8 x 100	**127,517**	13	35	25	400
TFE08110	C1 & C2	Ø8 x 110	**133,263**	13	45	25	400
TFE08120	C1 & C2	Ø8 x 120	**183,077**	13	55	25	400
TFE08140	C1 & C2	Ø8 x 140	**188,417**	13	75	25	300
TFE10060	C1 & C2	Ø10 x 60	**160,163**	15	5	50	200
TFE10070	C1 & C2	Ø10 x 70	**173,833**	15	15	50	200
TFE10080	C1 & C2	Ø10 x 80	**187,023**	15	25	50	300
TFE10090	C1 & C2	Ø10 x 90	**193,573**	15	5	25	300
TFE10100	C1 & C2	Ø10 x 100	**199,753**	15	15	25	300
TFE10120	C1 & C2	Ø10 x 120	**229,577**	15	35	25	200
TFE10140	C1 & C2	Ø10 x 140	**254,683**	15	55	25	100
TFE12080	-	Ø12 x 80	**229,750**	18	5	25	100
TFE12090	-	Ø12 x 90	**245,470**	18	15	25	100
TFE12110	C1 & C2	Ø12 x 110	**280,437**	18	5	25	100
TFE12130	C1 & C2	Ø12 x 130	**322,457**	18	25	25	150
TFE12150	C1 & C2	Ø12 x 150	**357,230**	18	45	25	100
TFE14080	-	Ø14 x 80	**330,057**	21	5	25	150
TFE14100	-	Ø14 x 100	**391,940**	21	25	25	150
TFE14120	C1 & C2	Ø14 x 120	**456,740**	21	5	25	100
TFE14130	C1 & C2	Ø14 x 130	**518,167**	21	15	25	100
TFE14140	C1 & C2	Ø14 x 140	**558,027**	21	25	25	100
TFE14160	-	Ø14 x 160	**607,100**	21	45	25	50
TFE18100	-	Ø18 x 100	**657,930**	24	10	20	80
TFE18130	-	Ø18 x 130	**767,877**	24	40	20	40
TFE18160	C1 & C2	Ø18 x 160	**895,123**	24	20	15	30
TFE18180	C1 & C2	Ø18 x 180	**968,417**	24	40	15	30
TFE18200	C1 & C2	Ø18 x 200	**1.062,100**	24	60	10	20

TFN

Hexagon head without nut. Zinc-plated coating. Opt.1 ETA Assessed



02 P. 362 Technical info

SOLID | Stone | Reinforced concrete | Cracked concrete | Concrete

CODE	DRILL Ø X LENGTH	€/100		THICKNESS MAX. FIXTURE		
TFN14080	Ø14 x 80	**475,077**	24	5	25	150

TH/TF

Self-tapping concrete screwbolt

TFS

Stud bolt. Zinc-plated coating. Opt.1
ETA Assessed



02 P. 362 Technical info

SOLID | Stone | Reinforced concrete | Cracked concrete | Concrete | kg. | ZINC

CODE	SEISMIC ASSESSMENT	DRILL Ø X LENGTH	€/100		THICKNESS MAX. FIXTURE		
TFS06100	C1 & C2	Ø6 x 100 (M8)	**134,480**	5	31	50	800
TFS06120	C1 & C2	Ø6 x 120 (M8)	**149,093**	5	51	50	600
TFS08110	C1 & C2	Ø8 x 110 (M10)	**199,350**	7	29	50	400
TFS08130	C1 & C2	Ø8 x 130 (M10)	**221,680**	7	44	50	400
TFS10120	-	Ø10 x 120 (M12)	**290,343**	8	26	25	200
TFS10140	-	Ø10 x 140 (M12)	**323,650**	8	46	25	200

TFM

Hanger male. Zinc-plated coating.
Opt.1 ETA Assessed



02 P. 362 Technical info

SOLID | Stone | Reinforced concrete | Cracked concrete | Concrete | kg. | ZINC

CODE	DRILL Ø X LENGTH	€/100			
TFM06035	Ø6 x 35 (M8)	**97,850**	13	100	400
TFM06055	Ø6 x 55 (M10)	**114,923**	13	100	600

TFF

Hanger female. Zinc-plated coating.
Opt.1 ETA Assessed



02 P. 362 Technical info

SOLID | Stone | Reinforced concrete | Cracked concrete | Concrete | kg. | ZINC

CODE	DRILL Ø X LENGTH	€/100			
TFF06035	Ø6 x 35 (M8-M10)	**118,647**	13	50	200
TFF06055	Ø6 x 55 (M8-M10)	**128,103**	13	50	200



INDEXcal V4

ANCHOR CALCULATION SOFTWARE

The INDEXcal anchor calculation programme is the right tool for designers of structural solutions in order to comply with the requirements of Eurocode 2, part 4. It quickly and thoroughly checks all the anchors in our catalogue based on user input parameters, indicating whether they are appropriate or not.

Benefits:

- Valid for cracked and uncracked concrete with different strengths.
- Calculation for fire and/or seismic conditions.
- Indicates the reason why anchors that do not meet the structural requirements are rejected.
- Anchor plate customisation, including rectangular, circular, hexagonal, octagonal and irregular.
- Allows standardised profiles to be included in the design.
- Anchor filtering option.
- Multilingual: available in Spanish, English, French, German and Dutch
- Direct access to technical sheets and standardisations from the software itself.
- Full, customisable pdf report
- Can be updated online.
- 3D user interface.
- Available for free use and can be downloaded at the website.
- Simultaneous calculation with several load hypotheses can be included.

QUALITY GUARANTEE

Our desire to improve and to certify the quality of our offer in order to fully respond to the needs of our customers drives us to increasingly widen our range of certified products. The assessment processes are performed by prestigious institutions which guarantee that our products fulfill the highest posible standards of quality and technical requirements.

CE
European Conformity

ETA
European Technical Assessment

SEISMIC C1 & C2
Seismic Assessment

UL
Underwriters Laboratories

ICC ES
ICC-ES®

FIRE RESISTANCE
Fire resistance

EMISSIONS DANS L'AIR INTÉRIEUR A+ A+ A B C
Low VOC emissions

LEED TESTED
Leadership in Energy and Environmental Design

FM APPROVED
FM Assessment







HO Concrete screw

HP

Flat head, TX recess. Yellow zinc-plated and zinc-plated



02 P. 363 Technical info

SOLID | Aerated concrete | Concrete | kg.

		SIZE	€/100		DRILL Ø		
HPZ75072	HP75072	7,5 x 72 Ø6	**39,117**	TX30	6	100	1.200
HPZ75092	HP75092	7,5 x 92 Ø6	**48,183**	TX30	6	100	1.200
HPZ75112	HP75112	7,5 x 112 Ø6	**61,787**	TX30	6	100	800
HPZ75132	HP75132	7,5 x 132 Ø6	**70,847**	TX30	6	100	600
HPZ75152	HP75152	7,5 x 152 Ø6	**90,553**	TX30	6	100	600
HPZ75182	HP75182	7,5 x 182 Ø6	**127,222**	TX30	6	100	300
HPZ75212	-	7,5 x 212 Ø6	**186,839**	TX30	6	100	300

Self-Service

CODE	SIZE	€/BAG	PCS.	BAGS
LSHP75072	7,5 x 72 Ø6	**6,211**	14	7
LSHP75092	7,5 x 92 Ø6	**7,274**	14	7
LSHP75112	7,5 x 112 Ø6	**7,671**	12	7
LSHP75132	7,5 x 132 Ø6	**8,797**	12	7

HP TP

HP screw caps



SOLID | PVC

CODE	SIZE	€/100			
TPBLANC		**5,424**	TX30	2.000	24.000
TPMARRO		**5,424**	TX30	2.000	24.000

HR

Cylindrical head Tx



02 P. 363 Technical info

SOLID | Aerated concrete | Concrete | kg. | ZINC

CODE	SIZE	€/100		DRILL Ø		
HR75072	7,5 x 72 Ø6	**42,060**	TX25	6	100	1.200
HR75092	7,5 x 92 Ø6	**49,870**	TX25	6	100	1.200
HR75112	7,5 x 112 Ø6	**65,523**	TX25	6	100	800
HR75132	7,5 x 132 Ø6	**76,863**	TX25	6	100	600

HE

Screw



SOLID | Aerated concrete | Concrete | kg. | G

CODE	SIZE	€/100	DRILL Ø	INSTALLATION KEY		
HE65032	6,5 x 32 Ø5	**17,330**	5	8+slot	1.000	3.000
HE65045	6,5 x 45 Ø5	**21,297**	5	8+slot	500	2.000
HE65057	6,5 x 57 Ø5	**27,467**	5	8+slot	500	2.000
HE65070	6,5 x 70 Ø5	**35,090**	5	8+slot	500	1.500
HE65080	6,5 x 80 Ø5	**41,807**	5	8+slot	250	1.000
HE65100	6,5 x 100 Ø5	**51,103**	5	8+slot	250	750
HE65125	6,5 x 125 Ø5	**66,350**	5	8+slot	250	1.000

HE + ARVUL

Screw with vulcanized EPDM-steel washer



SOLID | Aerated concrete | Concrete | kg. | G

CODE	SIZE	€/100	DRILL Ø	INSTALLATION KEY		
HE1665032	6,5 x 32 P16 Ø5	**27,143**	5	8+slot	1.000	2.000
HE1665045	6,5 x 45 P16 Ø5	**31,960**	5	8+slot	500	1.500
HE1665057	6,5 x 57 P16 Ø5	**38,987**	5	8+slot	500	1.500
HE1665070	6,5 x 70 P16 Ø5	**44,127**	5	8+slot	500	1.000
HE1665080	6,5 x 80 P16 Ø5	**53,097**	5	8+slot	250	750
HE1665100	6,5 x 100 P16 Ø5	**62,133**	5	8+slot	250	750
HE1665125	6,5 x 125 P16 Ø5	**78,843**	5	8+slot	250	500

Heavy duty anchor for high perfomance in concrete

SL

SL-PT

Opt.1 ETA Assessed. Hexagonal head

SOLID

Stone | Reinforced concrete | Cracked concrete | Concrete

CODE	SIZE	€/100	THICKNESS MAX. FIXTURE		
SLPT10070	M6 x 70 Ø10	**303,770**	10	50	600
SLPT10080	M6 x 80 Ø10	**318,743**	20	50	600
SLPT10100	M6 x 100 Ø10	**355,743**	40	50	300
SLPT10110	M6 x 110 Ø10	**377,733**	50	25	150
SLPT12080	M8 x 80 Ø12	**366,243**	5	50	300
SLPT12090	M8 x 90 Ø12	**385,510**	15	50	200
SLPT12100	M8 x 100 Ø12	**401,760**	25	50	200
SLPT12120	M8 x 120 Ø12	**438,617**	45	25	200
SLPT16100	M10 x 100 Ø16	**626,413**	15	25	150
SLPT16120	M10 x 120 Ø16	**707,677**	35	25	100
SLPT16140	M10 x 140 Ø16	**799,143**	55	20	60
SLPT16160	M10 x 160 Ø16	**889,260**	75	20	60
SLPT18110	M12 x 110 Ø18	**872,110**	10	20	80
SLPT18120	M12 x 120 Ø18	**927,083**	20	20	80
SLPT18140	M12 x 140 Ø18	**1.023,513**	40	20	80
SLPT18150	M12 x 150 Ø18	**1.082,330**	50	20	80
SLPT18170	M12 x 170 Ø18	**1.215,927**	70	15	45
SLPT18200	M12 x 200 Ø18	**1.359,760**	100	15	30
SLPT24140	M16 x 140 Ø24	**1.571,677**	20	10	40
SLPT24170	M16 x 170 Ø24	**1.848,060**	50	10	30
SLPT24200	M16 x 200 Ø24	**2.132,370**	80	10	20
SLPT24220	M16 x 220 Ø24	**2.316,453**	100	10	20
SLPT28170	M20 x 170 Ø28	**2.444,117**	20	10	20
SLPT28200	M20 x 200 Ø28	**2.829,887**	50	10	20
SLPT28240	M20 x 240 Ø28	**3.373,160**	90	5	10



02 P. 364 Technical info

SL-PC

Opt.1 ETA Assessed. Countersunk head

SOLID

Stone | Reinforced concrete | Cracked concrete | Concrete

CODE	SIZE	€/100	THICKNESS MAX. FIXTURE		
SLPC10070	M6 x 70 Ø10	**429,573**	10	50	600
SLPC10080	M6 x 80 Ø10	**452,870**	20	50	600
SLPC10100	M6 x 100 Ø10	**494,997**	40	50	300
SLPC12100	M8 x 100 Ø12	**588,647**	25	50	200
SLPC16100	M10 x 100 Ø16	**850,020**	15	25	150
SLPC16120	M10 x 120 Ø16	**922,983**	35	25	100
SLPC18120	M12 x 120 Ø18	**1.143,490**	20	20	80



02 P. 364 Technical info

CH



CH sleeve anchors are an ideal solution for the installation of structural elements in non-cracked concrete such as handrails, cable lines, street furniture or metal shelves. The geometry of the anchor guarantees a high load capacity, a high degree of safety and easy installation. When tightening the anchor, the cone is inserted into the expansion sleeve (without turning thanks to the anti-rotation), expanding it against the material to be fixed. The assortment of CH anchors consists of different head models depending on the required use.

DESIGN AND GEOMETRY



1. **Cone with anti-rotation fins** fins prevents the anchor from turning, ensuring the expansion of the sleeve and facilitating its installation.
2. **Sleeve opening**. Optimizes the insertion of the cone and facilitates its expansion.
3. **Practical information** for the installation (diameter and length) stamped on the sleeve.
4. **Design of the sleeve** to ensure more efficient expansion.
5. Required **depth mark** to ensure proper performance.
6. **Blue rubber** with anti-rotation fins that facilitate installation.
7. **Washer** that increases the fixing surface.

APPLICATIONS



- Structural fixings in non-cracked concrete.
- Fixing of signs, shelves, panels, porticoes, railings, awnings, fence posts.
- Urban furniture, cinema, theatre and stadium seats.
- Cable trays
- Doors
- Façades
- Temporary fixings

QUALITIES AND ADVANTAGES



ANTI-ROTATION GUARANTEE. FACILITATES INSTALLATION.

The anchor consists of several anti-rotation elements (cone, sleeve and rubber) that prevent the anchor from turning at the start of the installation, facilitating installation and guaranteeing optimal expansion and performance.

MAXIMUM GUARANTEES. APPROVED ACCORDING TO THE HIGHEST QUALITY STANDARDS.

Approved (ETA 18/0018) for use in non-structural concrete.



VERSATILITY. MULTIPLE USES.

Indicated for the installation of static or quasi-static loads in non-cracked concrete and reinforced concrete. Allows the disassembly of the anchor, unscrewing the screw or threaded element.

100% INDEX MANUFACTURED

This allows us to ensure a rigorous control of processes, guarantee the highest quality in our products, provide the best service and obtain a competitive global cost.

GAMA



PRODUCT	CH-TO	CH-A2	CH-8.8	CH-8.8 E	CH-PL	CH-PI	CH-ES	CH-INB	CH-INN
HEAD OF THE SCREW	Hexagonal screw 6.8	A2 stainless steel hexagonal screw	Hexagonal screw 8.8	Hexagonal head screw 8.8 for reduced thicknesses	Flat head screw	A2 Stainless steel flat head screw	Projecting bolt	Zinc-plated tamperproof head	Black zinc-plated tamperproof head
COATING/SCREW MATERIAL	ZINC	A2 INOX	ZINC	ZINC	ZINC	A2 INOX	ZINC	ZINC	BLACK
CE NON STRUCTURAL FIXINGS	✓	✓	✓	-	✓	✓	-	✓	✓



PRODUCT	CH-GA	CH-GE	CH-GF	CH-GF A2	CH-AR	CH-AF	CH-AF A2
HEAD OF THE SCREW	Hook bolt	Hook spiral	Forged hook bolt	A2 Stainless steel forged hook bolt	Eye bolt	Forged eye bolt	A2 Stainless steel forged eye bolt
COATING/SCREW MATERIAL	ZINC	ZINC	ZINC	A2 INOX	ZINC	ZINC	A2 INOX
CE NON STRUCTURAL FIXINGS	-	-	-	-	-	-	-

THE PERFECT COATING ACCORDING TO THE EXPECTED LEVELS OF CORROSION

Zinc coating: suitable for use in dry indoor conditions (category C1 according to ISO 923), for a period of 50 years.

Black zinc coating: suitable for use in dry indoor conditions (category C1 according to ISO 923), for a period of 50 years.

A2 Stainless Material: valid for indoor spaces with high frequency of condensation or outdoor environments not located near coastal or highly polluted areas.

Anti-spin sleeve anchor, for medium loads

CH

SOLID

Solid brick · Stone · Concrete · Reinforced concrete

CH-TO

Hexagonal head screw 6.8. Opt.7 ETA Assessed



02 P. 365 Technical info

CODE	SIZE	€/100		
ACHT08C	M6 x 45 Ø8	**34,563**	200	1.200
ACHT08L	M6 x 60 Ø8	**40,043**	200	800
•ACHT09C	M6 x 45 Ø9	**41,093**	200	800
•ACHT09L	M6 x 60 Ø9	**46,513**	200	800
ACHT10C	M8 x 60 Ø10	**55,157**	100	600
ACHT10L	M8 x 80 Ø10	**64,660**	100	400
•ACHT11C	M8 x 60 Ø11	**65,393**	100	400
•ACHT11L	M8 x 80 Ø11	**78,757**	100	400
ACHT12C	M10 x 70 Ø12	**89,910**	100	200
ACHT12L	M10 x 100 Ø12	**111,107**	50	200
•ACHT14C	M10 x 70 Ø14	**113,303**	100	200
•ACHT14L	M10 x 100 Ø14	**137,727**	50	200
ACHT16C	M12 x 80 Ø16	**174,327**	50	200
ACHT16L	M12 x 110 Ø16	**211,517**	50	100
ACHT20C	M16 x 110 Ø20	**381,160**	25	50
•ACHT25C	M20 x 130 Ø25	**1.088,713**	15	45

• Non-assessed sizes

Blister

CODE	SIZE	€/BAG	PCS.	BAGS
BZACHT08C	M6 x 45 Ø8	**3,427**	2	15
BZACHT08L	M6 x 60 Ø8	**3,427**	2	15
BZACHT10C	M8 x 60 Ø10	**3,427**	2	15
BZACHT10L	M8 x 80 Ø10	**3,427**	2	15
BZACHT12C	M10 x 70 Ø12	**3,427**	2	10
BZACHT12L	M10 x 100 Ø12	**3,427**	2	10

Window Box

CODE	SIZE	€/BOX	PCS.	BOXES
VACHT08C	M6 x 45 Ø8	**6,312**	15	8
VACHT08L	M6 x 60 Ø8	**7,107**	15	8
VACHT10C	M8 x 60 Ø10	**6,686**	10	8
VACHT10L	M8 x 80 Ø10	**7,837**	10	8
VACHT12C	M10 x 70 Ø12	**8,446**	8	8
VACHT12L	M10 x 100 Ø12	**8,030**	6	8
VACHT16C	M12 x 80 Ø16	**8,122**	4	8

Self-Service

CODE	SIZE	€/BAG	PCS.	BAGS
LSACHT08C	M6 x 45 Ø8	**9,912**	24	6
LSACHT08L	M6 x 60 Ø8	**7,806**	16	6
LSACHT10C	M8 x 60 Ø10	**5,826**	8	6
LSACHT10L	M8 x 80 Ø10	**6,409**	8	6
LSACHT12C	M10 x 70 Ø12	**8,446**	8	6
LSACHT12L	M10 x 100 Ø12	**9,808**	8	6
LSACHT16C	M12 x 80 Ø16	**8,164**	4	5

STAINLESS STEEL

Solid brick · Stone · Concrete · Reinforced concrete

CH-A2

A2 Stainless steel. Opt.7 ETA Assessed



02 P. 365 Technical info

CODE	SIZE	€/100		
ACHTA208C	M6 x 45 Ø8	**108,713**	100	1.200
ACHTA208L	M6 x 60 Ø8	**122,817**	100	600
•ACHTA209C	M6 x 45 Ø9	**123,027**	100	1.200
•ACHTA209L	M6 x 60 Ø9	**142,097**	100	600
ACHTA210C	M8 x 60 Ø10	**176,140**	100	600
ACHTA210L	M8 x 80 Ø10	**202,623**	100	400
•ACHTA211C	M8 x 60 Ø11	**211,907**	100	400
•ACHTA211L	M8 x 80 Ø11	**249,623**	100	400
ACHTA212C	M10 x 70 Ø12	**297,137**	100	200
ACHTA212L	M10 x 100 Ø12	**363,387**	50	200
•ACHTA214C	M10 x 70 Ø14	**395,263**	100	300
•ACHTA214L	M10 x 100 Ø14	**440,873**	50	200
ACHTA216C	M12 x 80 Ø16	**585,907**	50	100
ACHTA216L	M12 x 110 Ø16	**741,410**	50	100
ACHTA220C	M16 x 110 Ø20	**1.522,157**	25	75

• Non-assessed sizes

Blister

CODE	SIZE	€/BAG	PCS.	BAGS
BZACHTA208C	M6 x 45 Ø8	**4,622**	2	15
BZACHTA208L	M6 x 60 Ø8	**4,622**	2	15
BZACHTA210C	M8 x 60 Ø10	**4,622**	2	15
BZACHTA210L	M8 x 80 Ø10	**4,622**	2	15

Window Box

CODE	SIZE	€/BOX	PCS.	BOXES
VACHTA208C	M6 x 45 Ø8	**13,641**	10	8
VACHTA208L	M6 x 60 Ø8	**15,859**	10	8
VACHTA210C	M8 x 60 Ø10	**14,204**	6	8
VACHTA210L	M8 x 80 Ø10	**16,912**	6	8
VACHTA212C	M10 x 70 Ø12	**15,938**	4	8
VACHTA212L	M10 x 100 Ø12	**19,673**	4	8

Self-Service

CODE	SIZE	€/BAG	PCS.	BAGS
LSACHTA208C	M6 x 45 Ø8	**14,734**	12	6
LSACHTA208L	M6 x 60 Ø8	**17,128**	12	6
LSACHTA210C	M8 x 60 Ø10	**17,044**	8	6
LSACHTA210L	M8 x 80 Ø10	**20,293**	8	6
LSACHTA212C	M10 x 70 Ø12	**21,519**	6	6
LSACHTA212L	M10 x 100 Ø12	**19,673**	4	5

CH

Anti-spin sleeve anchor, for medium loads

CH-8.8

Hexagonal head screw 8.8. Opt.7 ETA Assessed



02 P. 365 Technical info

SOLID — Solid brick, Stone, Concrete, Reinforced concrete — kg. — ZINC

CODE	SIZE	€/100		
ACHT8808C	M6 x 45 Ø8	**40,967**	200	1.200
ACHT8808L	M6 x 60 Ø8	**47,040**	200	800
ACHT8810C	M8 x 60 Ø10	**64,623**	100	600
ACHT8810L	M8 x 80 Ø10	**78,567**	100	400
ACHT8812C	M10 x 70 Ø12	**105,343**	100	200
ACHT8812L	M10 x 100 Ø12	**130,180**	50	200
ACHT8816C	M12 x 80 Ø16	**198,933**	50	200
ACHT8816L	M12 x 110 Ø16	**241,377**	50	100
ACHT8820C	M16 x 110 Ø20	**427,180**	25	50

CH-8.8 E

Hexagonal head screw 8.8 for reduced thicknesses



02 P. 366 Technical info

SOLID — Solid brick, Stone, Concrete, Reinforced concrete — kg. — ZINC

CODE	SIZE	€/100		
ACHT8808E	M6 x 40 Ø8	**45,853**	200	1.200
ACHT8810E	M8 x 40 Ø10	**78,297**	100	600



Especially suitable for fixings on reduced thicknesses of concrete.

CH-PL

Flat head screw. Opt.7 ETA Assessed



02 P. 366 Technical info

SOLID — Solid brick, Stone, Concrete, Reinforced concrete — kg. — ZINC

CODE	SIZE	€/100			
ACHTPL08C	M6 x 45 Ø8	**61,547**	4	100	1.600
ACHTPL08L	M6 x 60 Ø8	**90,263**	4	100	1.200
ACHTPL10C	M8 x 60 Ø10	**101,143**	5	100	400
ACHTPL10L	M8 x 80 Ø10	**136,347**	5	100	400
ACHTPL12C	M10 x 70 Ø12	**179,083**	6	50	400
ACHTPL12L	M10 x 100 Ø12	**307,047**	6	50	300

CH-PI

Cabeza plana inoxidable A2. Homologado ETE Opción 7



02 P. 366 Technical info

STAINLESS STEEL — Solid brick, Stone, Concrete, Reinforced concrete — kg. — A2 INOX

CODE	SIZE	€/100			
ACHTPI08C	M6 x 45 Ø8	**116,590**	4	100	1.200
ACHTPI08L	M6 x 60 Ø8	**149,287**	4	100	1.200
ACHTPI10C	M8 x 60 Ø10	**219,947**	5	100	600
ACHTPI10L	M8 x 80 Ø10	**260,373**	5	100	400
ACHTPI12C	M10 x 70 Ø12	**347,790**	6	50	300
ACHTPI12L	M10 x 100 Ø12	**410,607**	6	50	300

Anti-spin sleeve anchor, for medium loads — CH

SOLID — Solid brick · Stone · Concrete · Reinforced concrete

CH-INB

Zinc-plated tamperproof head. Opt.7 ETA Assessed



CODE	SIZE	€/100			
ACHINB08C	M6 x 45 Ø8	**59,180**	TX40	100	1.200
ACHINB08L	M6 x 60 Ø8	**67,830**	TX40	100	800
ACHINB10C	M8 x 60 Ø10	**83,930**	TX40	100	600
ACHINB10L	M8 x 80 Ø10	**98,997**	TX40	100	400

Blister

CODE	SIZE	€/BAG	PCS.	BAGS
BZACHINB08C	M6 x 45 Ø8	**3,427**	2	15
BZACHINB10C	M8 x 60 Ø10	**3,427**	2	15

FREE -1 bit TX40 (Cod. PUTO40) inside each box

Tamperproof available separately on page 226

02 P. 366 Technical info

SOLID — Solid brick · Stone · Concrete · Reinforced concrete

CH-INN

Black zinc-plated tamperproof head. Opt.7 ETA Assessed



CODE	SIZE	€/100			
ACHINN08C	M6 x 45 Ø8	**72,123**	TX40	100	1.200
ACHINN08L	M6 x 60 Ø8	**80,803**	TX40	100	800
ACHINN10C	M8 x 60 Ø10	**97,077**	TX40	100	600
ACHINN10L	M8 x 80 Ø10	**116,590**	TX40	100	400

FREE -1 bit TX40 (Cod. PUTO40) inside each box

Tamperproof available separately on page 226

02 P. 366 Technical info

SOLID — Solid brick · Stone · Concrete · Reinforced concrete

CH-ES

Projecting bolt



CODE	SIZE	€/100		
ACHE08C	M6 x 45 Ø8	**64,050**	200	1.200
ACHE09C	M6 x 45 Ø9	**66,297**	200	800
ACHE10C	M8 x 60 Ø10	**94,743**	100	600
ACHE10L	M8 x 80 Ø10	**110,320**	100	400
ACHE11C	M8 x 60 Ø11	**104,477**	100	600
ACHE11L	M8 x 80 Ø11	**115,460**	100	400
ACHE12C	M10 x 70 Ø12	**134,247**	100	200
ACHE12L	M10 x 100 Ø12	**175,700**	50	200
ACHE14C	M10 x 70 Ø14	**147,640**	100	200
ACHE14L	M10 x 100 Ø14	**198,263**	50	200

02 P. 366 Technical info

CH

Anti-spin sleeve anchor, for medium loads

CH-GA

Hook bolt



02 Technical info P. 366

SOLID — Solid brick, Stone, Concrete, Reinforced concrete — kg. — ZINC

CODE	SIZE	€/100	APERTURE HOOK		
ACHG08C	M6 x 45 Ø8	**58,633**	10	100	600
ACHG09C	M6 x 45 Ø9	**61,373**	10	100	600
ACHG10C	M8 x 60 Ø10	**97,503**	13	100	400
ACHG11C	M8 x 60 Ø11	**107,373**	13	100	400
ACHG12C	M10 x 70 Ø12	**157,763**	14	50	200
ACHG14C	M10 x 70 Ø14	**180,777**	14	50	200
ACHG16C	M12 x 80 Ø16	**286,473**	22	25	100

Blister

CODE	SIZE	€/BAG	PCS.	BAGS
BZACHG08C	M6 x 45 Ø8	**3,427**	2	15
BZACHG10C	M8 x 60 Ø10	**3,427**	2	15
BZACHG12C	M10 x 70 Ø12	**3,427**	2	10

Window Box

CODE	SIZE	€/BOX	PCS.	BOXES
VACHG08C	M6 x 45 Ø8	**6,702**	10	8
VACHG10C	M8 x 60 Ø10	**6,802**	6	8

Self-Service

CODE	SIZE	€/BAG	PCS.	BAGS
LSACHG08C	M6 x 45 Ø8	**7,856**	12	6
LSACHG10C	M8 x 60 Ø10	**6,802**	6	6

CH-GE

Hook spiral



02 Technical info P. 367

SOLID — Solid brick, Stone, Concrete, Reinforced concrete — kg. — ZINC

CODE	SIZE	€/100		
ACHGE10	M8 x 115 Ø10	**227,267**	25	150
ACHGE12	M10 x 135 Ø12	**267,400**	15	90



CH-GF

Forged hook bolt



02 Technical info P. 367

SOLID — Solid brick, Stone, Concrete, Reinforced concrete — kg. — ZINC

CODE	SIZE	€/100	APERTURE HOOK		
ACHGFO08C	M6 x 45 Ø8	**112,580**	10	100	600
ACHGFO10C	M8 x 60 Ø10	**153,290**	11	100	400
ACHGFO12C	M10 x 70 Ø12	**246,220**	14	50	200

CH-GF A2

A2 Stainless steel forged hook bolt



02 Technical info P. 367

STAINLESS STEEL — Solid brick, Stone, Concrete, Reinforced concrete — kg. — A2 INOX

CODE	SIZE	€/100	APERTURE HOOK		
ACHGA208C	M6 x 45 Ø8	**414,233**	10	100	600
ACHGA210C	M8 x 60 Ø10	**615,310**	11	100	400
ACHGA212C	M10 x 70 Ø12	**857,143**	14	50	200

Anti-spin sleeve anchor, for medium loads — CH

CH-AR

Eye bolt



02 P. 367 Technical info

SOLID — Solid brick, Stone, Concrete, Reinforced concrete

CODE	SIZE	€/100	EYE BOLT Ø		
ACHA08C	M6 x 45 Ø8	**58,633**	10	100	600
ACHA09C	M6 x 45 Ø9	**61,373**	10	100	600
ACHA10C	M8 x 60 Ø10	**97,503**	13	100	400
ACHA11C	M8 x 60 Ø11	**107,373**	13	100	200
ACHA12C	M10 x 70 Ø12	**157,763**	14	50	200
ACHA14C	M10 x 70 Ø14	**180,777**	14	50	200
ACHA16C	M12 x 80 Ø16	**286,473**	22	25	100

Blister

CODE	SIZE	€/BAG	PCS.	BAGS
BZACHA08C	M6 x 45 Ø8	**3,427**	2	15
BZACHA10C	M8 x 60 Ø10	**3,427**	2	15
BZACHA12C	M10 x 70 Ø12	**3,427**	2	10

Window Box

CODE	SIZE	€/BOX	PCS.	BOXES
VACHA08C	M6 x 45 Ø8	**6,825**	10	8
VACHA10C	M8 x 60 Ø10	**6,802**	6	8

Self-Service

CODE	SIZE	€/BAG	PCS.	BAGS
LSACHA08C	M6 x 45 Ø8	**9,303**	14	6
LSACHA10C	M8 x 60 Ø10	**6,802**	6	6

CH-AF

Forged eye bolt



02 P. 367 Technical info

SOLID — Solid brick, Stone, Concrete, Reinforced concrete

CODE	SIZE	€/100	EYE BOLT Ø		
ACHAFO08C	M6 x 45 Ø8	**106,513**	10	100	600
ACHAFO10C	M8 x 60 Ø10	**139,127**	12	100	400
ACHAFO12C	M10 x 70 Ø12	**213,553**	14	50	200

CH-AF A2

A2 Stainless steel forged eye bolt



02 P. 367 Technical info

STAINLESS STEEL — Solid brick, Stone, Concrete, Reinforced concrete

CODE	SIZE	€/100	EYE BOLT Ø		
ACHAA208C	M6 x 45 Ø8	**454,853**	10	100	600
ACHAA210C	M8 x 60 Ø10	**725,567**	11	100	400
ACHAA212C	M10 x 70 Ø12	**986,037**	14	50	200

Hook bolt, eye bolt and spiral hook available separately on page 312



HE



The range of drop-in expansion anchors with internal thread are designed for installing pipework, cable trays, ventilation ducts or fire sprinkler systems.
They have European technical approval for structural applications in non-cracked concrete (in accordance with EAD 332023) and for the installation of redundant non-structural systems in cracked concrete, including under conditions of fire exposure (in accordance with EAD 330747). Available with ATLANTIS C3-L, A4 stainless steel or zinc-plated coating for use in both indoor and outdoor applications.

DESIGN AND GEOMETRY



Inner thread. The first part of the anchor has an inner thread where the metric bolt and/or threaded bar is installed (bolts and bars not supplied with the product). The metric inner thread guarantees maximum versatility for use in multiple installations.



Internal cone. The lower part of the anchor contains a cone that causes the fins to expand during installation.



Fins. The expansion of the cone causes the fins to expand, producing friction against the walls of the base material to enable fastening.



Protection. The plastic inside the anchor prevents the cone from falling during installation or transportation of the box.



Version with HE-CL collar. The version with collar prevents the anchor from being introduced too far into the base material in cases where the bore hole has been made deeper than required by the documentation.



Identification. The size of the anchor is punched onto the body to allow easy identification and to always know the required bore size and expansion tool.



Short version HE-HC. The HE-HC version enables installation in areas where there are believed to be a lot of reinforcement trusses, such as the lower part of slabs. Given its short length (25 mm) it is not expected to interfere with the trusses.

APPLICATIONS



Anchor for fastening structural and non-structural elements

- Suspended ceiling installations
- Fire sprinkler systems
- Suspension systems for pipes
- Downpipes with rods
- Ventilation systems and/or air ducts
- Cable trays
- Fixation of structural systems in non-cracked concrete with static or quasi-static loads
- Fixing of redundant non-structural systems in cracked concrete or one-off applications in non-cracked concrete.

100% INDEX MANUFACTURED

This allows us to ensure a rigorous control of processes, guarantee the highest quality in our products, provide the best service and obtain a competitive global cost.

QUALITIES AND ADVANTAGES

REMOVABLE AND REUSABLE ANCHOR.

The bolt or bar used can be removed, leaving a clear surface (the casing and cone remain inside the bore hole). The installed anchor can be reused.

MAXIMUM GUARANTEES. PRODUCTS APPROVED ACCORDING TO THE HIGHEST QUALITY STANDARDS.

- Approved (ETA 14/0135) for redundant non-structural systems in cracked and non-cracked concrete (C12/15 to C50/60), including under conditions of fire exposure.
- Approved (ETA 14/0068) for structural applications in non-cracked concrete (C20/25 to C50/60).
- FM Approval for use in fire sprinkler systems.
- Confirmed suitability for the installation of sprinkler systems in accordance with the VdS CEA 4001 guidelines.

EASY INSTALLATION.

The EXP tool with rubber protector enables safe, controlled and ergonomic expansion of the anchor.

How do I know if the anchor has been installed correctly?
Once the sleeve has been inserted into the hole, hit with the expander until the upper edge of the sleeve is marked with some notches.



RANGE



PRODUCT	HE-HO	HE-A4	HE-CL	HE-C4	HE-HC	HE-NO	HE-NS
COATING/MATERIAL	Z ZINC	A4 INOX	Z ZINC	A4 INOX	Z ZINC	Z ZINC	ATLANTIS
CE NON STRUCTURAL FIXINGS	✓	✓	✓	✓	✓		
CE CRACKED CONCRETE	✓		✓				
FIRE RESISTANCE	✓	✓	✓	✓	✓		
FM APPROVED	✓		✓				
VdS CEA 4001	✓	✓	✓	✓	✓		

THE PERFECT COATING ACCORDING TO THE EXPECTED LEVELS OF CORROSION

Atlantis C3-L coating: valid for dry indoor conditions (50 years) or in C3-type outdoor environments according to ISO 9223, for a period of 25 years.

Zinc coating: suitable for use in dry indoor conditions (category C1 according to ISO 923), for a period of 50 years.

A4 Stainless Steel: Suitable for indoor and outdoor applications, in coastal or industrial areas, areas exposed to high pollution levels and areas near roads.

Drop-in anchor with internal thread for heavy loads — HE

HE-HO

Zinc-plated. Opt.7 ETA Assessed & for non-structural applications

SOLID — Stone, Reinforced concrete, Concrete

CODE	SIZE	€/100	LENGTH		
HEHOM06	M6 x 25 Ø8	**20,387**	25	100	3.200
HEHOM08	M8 x 30 Ø10	**26,417**	30	100	1.600
HEHOM10	M10 x 40 Ø12	**44,183**	40	50	800
HEHOM12	M12 x 50 Ø15	**81,223**	50	50	400
HEHOM16	M16 x 65 Ø20	**208,487**	65	25	200
HEHOM20	M20 x 80 Ø25	**417,756**	80	25	100
HEHOM12D	M12 x 50 Ø16	**94,803**	50	50	400



* Designed for fastening diamond cutting equipment



02 P. 368 Technical info

HE-A4

A4 Stainless steel. ETA Assessed for non-structural applications

STAINLESS STEEL — Stone, Reinforced concrete, Concrete

CODE	SIZE	€/100	LENGTH		
HEA4M06	M6 x 25 Ø8	**110,967**	25	100	4.000
HEA4M08	M8 x 30 Ø10	**158,223**	30	100	2.200
HEA4M10	M10 x 40 Ø12	**237,783**	40	50	1.000
HEA4M12	M12 x 50 Ø15	**473,433**	50	50	600
HEA4M16	M16 x 65 Ø20	**1.057,930**	65	25	250
HEA4M20	M20 x 80 Ø25	**1.932,287**	80	25	100



02 P. 368 Technical info

HE-CL

With collar. Zinc-plated. Opt.7 ETA Assessed & for non-structural applications

SOLID — Stone, Reinforced concrete, Concrete

CODE	SIZE	€/100	LENGTH		
HECLOM06	M6 x 25 Ø8	**24,113**	25	100	3.200
HECLOM08	M8 x 30 Ø10	**33,280**	30	100	1.600
HECLOM10	M10 x 40 Ø12	**52,030**	40	50	800
HECLOM12	M12 x 50 Ø15	**94,430**	50	50	400
HECLOM16	M16 x 65 Ø20	**265,429**	65	25	200
HECLOM12D	M12 x 50 Ø16	**110,103**	50	50	400



* Designed for fastening diamond cutting equipment



02 P. 368 Technical info

HE-C4 NEW

With collar. A4 Stainless steel. ETA Assessed for non-structural applications

STAINLESS STEEL — Stone, Reinforced concrete, Concrete

CODE	SIZE	€/100	LENGTH		
HEC4M06	M6 x 25 Ø8	**152,948**	25	100	3.200
HEC4M08	M8 x 30 Ø10	**218,993**	30	100	1.600
HEC4M10	M10 x 40 Ø12	**338,341**	40	50	800
HEC4M12	M12 x 50 Ø15	**608,319**	50	50	400



02 P. 368 Technical info

HE

Drop-in anchor with internal thread for heavy loads

HE-HC

Short. Zinc-plated. ETA Assessed for non-structural applications



SOLID — Stone — Reinforced concrete — Concrete

CODE	SIZE	€/100	LENGTH		
HEHCM08	M8 x 25	**30,947**	25	100	1.600
HEHCM10	M10 x 25	**50,402**	25	50	800
HEHCM12	M12 x 25	**92,660**	25	50	800

HE-NO

Zinc-plated



02 P. 368 Technical info

SOLID — Stone — Reinforced concrete — Concrete

CODE	SIZE	€/100	LENGTH		
HENOM06	M6 x 25 Ø8	**14,640**	25	100	4.000
HENOM08	M8 x 30 Ø10	**20,217**	30	100	2.200
HENOM10	M10 x 40 Ø12	**33,810**	40	50	1.000
HENOM12	M12 x 50 Ø15	**62,147**	50	50	600
HENOM16	M16 x 65 Ø20	**156,610**	65	25	250
HENOM20	M20 x 80 Ø25	**307,353**	80	25	100

Blister

CODE	SIZE	€/BAG	PCS.	BAGS
BZHENOM06	M6 x 25 Ø8	**3,427**	4	20
BZHENOM08	M8 x 30 Ø10	**3,427**	4	20
BZHENOM10	M10 x 40 Ø12	**3,427**	2	15

Window Box

CODE	SIZE	€/BOX	PCS.	BOXES
VHENOM06	M6 x 25 Ø8	**3,398**	15	8
VHENOM08	M8 x 30 Ø10	**4,148**	15	8

Self-Service

CODE	SIZE	€/BAG	PCS.	BAGS
LSHENOM06	M6 x 25 Ø8	**5,639**	30	7
LSHENOM08	M8 x 30 Ø10	**7,463**	30	7
LSHENOM10	M10 x 40 Ø12	**7,169**	16	7

HE-NS

ATLANTIS C3-L



02 P. 368 Technical info

SOLID — Stone — Reinforced concrete — Concrete

CODE	SIZE	€/100	LENGTH		
HENSM08	M8 x 30 Ø10	**32,512**	30	100	1.600
HENSM10	M10 x 40 Ø12	**52,624**	40	50	1.000
HENSM12	M12 x 50 Ø15	**96,741**	50	50	600
HENSM16	M16 x 65 Ø20	**243,782**	65	25	250

EXP

Manual setting tool for Drop-in anchors (except HE-HC)



SOLID

CODE	SIZE	SUITABLE FOR	€/100		
EXHBM06	M6	M6 x 25 Ø8	**1.325,042**	1	10
EXHBM08	M8	M8 x 30 Ø10	**1.325,042**	1	10
EXHBM10	M10	M10 x 40 Ø12	**1.325,042**	1	10
EXHBM12	M12	M12 x 50 Ø15	**1.325,042**	1	10
EXHBM16	M16	M16 x 65 Ø20	**1.514,337**	1	10
•EXHBM20	M20	M20 x 80 Ø25	**1.577,434**	1	10

• Measurements without handle

NEW EXP-C

Manual setting tool for drop in anchors HE-HC



SOLID

CODE	SIZE	€/100		
EXHBM08C	M8 (HE-HC)	**1.325,042**	1	10
EXHBM10C	M10 (HE-HC)	**1.325,042**	1	10
EXHBM12C	M12 (HE-HC)	**1.325,042**	1	10

Hollow-core slab anchor. ETA Assessed — HC

HOLLOWS

Hollow-core slab

CODE	SIZE	€/100	DRILL Ø		
HCM06	M6	**93,273**	10	100	600
HCM08	M8	**112,563**	12	50	600
HCM10	M10	**160,123**	16	25	300



Hollow ceiling anchor



02 P. 368 Technical info

Brass expansion anchor for light fastenings in solid materials — TALA

SOLID

Stone · Aerated concrete · Reinforced concrete · Concrete

CODE	SIZE	€/100		
TALA532	W5/32 x 16 Ø5	**11,680**	300	9.600
TALAM04	M4 x 16 Ø5	**11,680**	300	9.600
TALAM05	M5 x 18 Ø6	**19,060**	200	6.400
TALAM06	M6 x 23 Ø8	**26,283**	200	4.800
TALAM08	M8 x 28 Ø10	**47,187**	100	2.400
TALAM10	M10 x 33 Ø12	**73,710**	150	1.800
TALAM12	M12 x 38 Ø15	**158,607**	150	900



02 P. 369 Technical info

Blister

CODE	SIZE	€/BAG	PCS.	BAGS
BZTALAM06	M6 x 23 Ø8	**3,427**	4	20
BZTALAM08	M8 x 28 Ø10	**3,427**	4	20
BZTALAM10	M10 x 33 Ø12	**3,427**	2	15

Window Box

CODE	SIZE	€/BOX	PCS.	BOXES
VTALAM06	M6 x 23 Ø8	**8,285**	25	8
VTALAM08	M8 x 28 Ø10	**8,797**	15	8
VTALAM10	M10 x 33 Ø12	**13,864**	15	8

Self-Service

CODE	SIZE	€/BAG	PCS.	BAGS
LSTALAM06	M6 x 23 Ø8	**14,910**	50	8
LSTALAM08	M8 x 28 Ø10	**15,841**	30	7
LSTALAM10	M10 x 33 Ø12	**20,791**	25	5

Steel expansion plug — TA-ME

SOLID

Aerated concrete · Solid brick · Reinforced concrete · Concrete

CODE	SIZE	€/100	MIN. ORDER QTY.		
TAME05030	M5 x 30 Ø5	**13,907**	200	100	4.500
TAME06032	M6 x 32 Ø6	**15,607**	200	100	2.400
TAME08038	M8 x 38 Ø8	**25,880**	200	100	1.200
TAME08060	M8 x 60 Ø8	**35,810**	100	50	600
TAME10060	M10 x 60 Ø10	**41,653**	50	50	600



02 P. 369 Technical info

Blister

CODE	SIZE	€/BAG	PCS.	BAGS
BZTAME06032	M6 x 32 Ø6	**3,427**	4	20
BZTAME08038	M8 x 38 Ø8	**3,427**	4	20
BZTAME08060	M8 x 60 Ø8	**3,427**	4	20
BZTAME10060	M10 x 60 Ø10	**3,427**	4	20

Ceiling wedge anchor ETA Assessed — AN-CU

SOLID

Cracked concrete · Stone · Aerated concrete · Concrete

CODE	SIZE	€/100	DRILL Ø		
ANCU06040	6 x 40 Ø6	**28,713**	6	100	1.200
ANCU06070	6 x 70 Ø6	**45,007**	6	100	1.200



02 P. 369 Technical info

NEW

TC-MA

Metal nail plug with steel drill



METAL | Hollow brick | Concrete

CODE	SIZE	€/100		
TCMA05022	5 x 22 Ø5	**16,460**	100	2.400
TCMA06030	6 x 30 Ø6	**24,667**	100	2.400
TCMA06040	6 x 40 Ø6	**27,693**	100	1.200
TCMA06050	6 x 50 Ø6	**31,847**	100	1.200

ZA

Anchor for medium-heavy loads in hollow and solid elements

ZA-CA

Shield



02 P. 370 Technical info

MULTI-MATERIAL | Hollow brick | Solid brick | Solid brick | Reinforced concrete | kg. | ZAMAK | ZINC

CODE	SIZE	€/100	SHIELD LENGHT		
AZAMC06	M6 x 48 Ø12	**127,703**	48	100	1.200
AZAMC08	M8 x 50 Ø14	**157,400**	50	100	600
AZAMC10	M10 x 58 Ø16	**202,630**	58	50	300
AZAMC12	M12 x 72 Ø20	**325,007**	72	25	300
AZAMC16	M16 x 107 Ø25	**667,567**	107	25	150

ZA-TO

Loose bolt



02 P. 370 Technical info

MULTI-MATERIAL | Hollow brick | Solid brick | Solid brick | Reinforced concrete | kg. | ZAMAK | ZINC

CODE	SIZE	€/100	SHIELD LENGHT		
AZAMT06	M6 x 50 Ø12	**164,950**	48	100	600
AZAMT08	M8 x 60 Ø14	**209,293**	50	100	400
AZAMT10	M10 x 80 Ø16	**298,327**	58	50	200
AZAMT12	M12 x 100 Ø20	**494,127**	72	25	100
AZAMT16	M16 x 140 Ø25	**1.098,647**	107	25	50

ZA-TL

Long loose bolt



02 P. 370 Technical info

MULTI-MATERIAL | Hollow brick | Solid brick | Solid brick | Reinforced concrete | kg. | ZAMAK | ZINC

CODE	SIZE	€/100	SCREW SIZE		
ZT06L10	M6 x 60 Ø12	**194,423**	60	100	600
ZT06L30	M6 x 80 Ø12	**213,087**	80	100	600
ZT08L15	M8 x 70 Ø14	**264,200**	70	100	400
ZT08L35	M8 x 90 Ø14	**274,410**	90	100	400
ZT08L45	M8 x 100 Ø14	**297,983**	100	100	300
ZT10L10	M10 x 70 Ø16	**421,637**	70	50	200
ZT10L30	M10 x 90 Ø16	**423,137**	90	50	200
ZT10L50	M10 x 110 Ø16	**405,810**	110	50	200
ZT10L80	M10 x 140 Ø16	**472,423**	140	50	150
ZT12L15	M12 x 90 Ø20	**639,123**	90	25	100
ZT12L45	M12 x 120 Ø20	**658,343**	120	25	50
ZT12L65	M12 x 140 Ø20	**720,880**	140	25	100

ZA-PR

Long loose bolt with pipe



02 P. 370 Technical info

MULTI-MATERIAL | Hollow brick | Solid brick | Solid brick | Reinforced concrete | kg. | ZAMAK | ZINC

CODE	SIZE	€/100	PIPE LENGTH		
ZP06C40	M6 x 90 Ø12	**406,143**	40	100	400
ZP08C15	M8 x 70 Ø14	**410,407**	15	100	200
ZP08C45	M8 x 100 Ø14	**474,823**	45	100	300
ZP10C50	M10 x 110 Ø16	**665,500**	50	50	100
ZP10C80	M10 x 140 Ø16	**789,163**	80	50	100
ZP12C15	M12 x 90 Ø20	**845,753**	15	25	100
ZP12C65	M12 x 140 Ø20	**1.030,153**	65	25	50

Anchor for medium-heavy loads in hollow and solid elements

ZA

ZA-ES

Projecting bolt

MULTI-MATERIAL — Hollow brick, Solid brick, Solid brick, Reinforced concrete — kg. — ZAMAK — ZINC

CODE	SIZE	€/100	SCREW SIZE		
AZAME06	M6 x 60 Ø12	**177,323**	60	100	600
AZAME08	M8 x 70 Ø14	**233,283**	70	100	400
AZAME10	M10 x 100 Ø16	**321,913**	100	50	200
AZAME12	M12 x 120 Ø20	**544,143**	120	25	100
AZAME16	M16 x 140 Ø25	**1.196,407**	140	25	50



02 P. 370 Technical info

ZA-GA

Hook bolt

MULTI-MATERIAL — Hollow brick, Solid brick, Solid brick, Reinforced concrete — kg. — ZAMAK — ZINC

CODE	SIZE	€/100	APERTURE HOOK		
AZAMG06	M6 x 45 Ø12	**175,380**	10	50	600
AZAMG08	M8 x 50 Ø14	**247,347**	13	50	300
AZAMG10	M10 x 56 Ø16	**336,810**	14	25	150
AZAMG12	M12 x 70 Ø20	**549,583**	22	25	100



02 P. 371 Technical info

ZA-GF

Forged hook bolt

MULTI-MATERIAL — Hollow brick, Solid brick, Solid brick, Reinforced concrete, Concrete — kg. — ZAMAK — ZINC

CODE	SIZE	€/100	APERTURE HOOK		
AZAMGFO06	M6 x 45 Ø12	**253,720**	10	50	600
AZAMGFO08	M8 x 50 Ø14	**368,517**	11	50	300
AZAMGFO10	M10 x 56 Ø16	**490,527**	14	25	150
AZAMGFO12	M12 x 70 Ø20	**796,190**	18	25	75



02 P. 371 Technical info

ZA-AR

Eye bolt

MULTI-MATERIAL — Hollow brick, Solid brick, Solid brick, Reinforced concrete — kg. — ZAMAK — ZINC

CODE	SIZE	€/100	EYE BOLT Ø		
AZAMA06	M6 x 45 Ø12	**175,380**	10	50	600
AZAMA08	M8 x 50 Ø14	**247,347**	13	50	300
AZAMA10	M10 x 56 Ø16	**336,810**	14	25	150
AZAMA12	M12 x 70 Ø20	**549,583**	22	25	100



02 P. 371 Technical info

ZA-AF

Forged eye bolt

MULTI-MATERIAL — Hollow brick, Solid brick, Solid brick, Reinforced concrete — kg. — ZAMAK — ZINC

CODE	SIZE	€/100	EYE BOLT Ø		
AZAMAFO06	M6 x 45 Ø12	**252,453**	10	50	600
AZAMAFO08	M8 x 50 Ø14	**340,550**	12	50	300
AZAMAFO10	M10 x 56 Ø16	**452,843**	14	25	150
AZAMAFO12	M12 x 70 Ø20	**724,470**	17	25	100



02 P. 371 Technical info

AC

Winged steel anchor for heavy-duty fixings

AC-CA

Shield



02 P. 371 Technical info

SOLID — Solid brick, Stone, Concrete, Reinforced concrete

CODE	SIZE	€/100	SHIELD LENGHT	MIN. ORDER QTY.		
AACCA06	M6 x 40 Ø10	**34,430**	40	-	50	1.200
AACCA08	M8 x 50 Ø14	**53,430**	50	100	50	600
AACCA10	M10 x 60 Ø16	**71,723**	60	100	50	300
AACCA12	M12 x 80 Ø20	**129,933**	80	50	25	300
AACCA16	M16 x 100 Ø25	**339,817**	100	20	10	120

AC-CI

A4 Stainless steel shield



02 P. 371 Technical info

STAINLESS STEEL — Solid brick, Stone, Concrete, Reinforced concrete

CODE	SIZE	€/100	SHIELD LENGHT		
AACCI06	M6 x 40 Ø10	**464,670**	40	50	1.200
AACCI08	M8 x 50 Ø14	**842,543**	50	50	600
AACCI10	M10 x 60 Ø16	**942,803**	60	25	300
AACCI12	M12 x 80 Ø20	**1.744,203**	80	10	120

AC-TO

Loose bolt 6.8



02 P. 371 Technical info

SOLID — Solid brick, Stone, Concrete, Reinforced concrete

CODE	SIZE	€/100	SCREW LENGTH		
AACTO06	M6 x 40 Ø10	**53,657**	50	50	600
AACTO08	M8 x 50 Ø14	**92,370**	60	50	300
AACTO10	M10 x 60 Ø16	**136,420**	70	50	200
AACTO12	M12 x 80 Ø20	**261,157**	100	25	100
AACTO16	M16 x 125 Ø25	**613,450**	120	10	30

AC-ES

Projecting bolt



02 P. 372 Technical info

SOLID — Solid brick, Stone, Concrete, Reinforced concrete

CODE	SIZE	€/100	PROJECTING BOLT LENGTH		
AACES06	M6 x 40 Ø10	**67,053**	60	50	600
AACES08	M8 x 50 Ø14	**102,430**	70	50	300
AACES10	M10 x 60 Ø16	**152,543**	80	50	200
AACES12	M12 x 80 Ø20	**305,957**	115	25	100

AC-GA

Hook bolt



02 P. 372 Technical info

SOLID — Solid brick, Stone, Concrete, Reinforced concrete

CODE	SIZE	€/100	APERTURE HOOK		
AACGA06	M6 x 40 Ø10	**110,880**	10	50	600
AACGA08	M8 x 50 Ø14	**154,400**	11	50	300
AACGA10	M10 x 60 Ø16	**233,967**	14	50	100
AACGA12	M12 x 80 Ø20	**405,437**	18	25	50

AC-AR

Eye bolt



02 P. 372 Technical info

SOLID — Solid brick, Stone, Concrete, Reinforced concrete

CODE	SIZE	€/100	EYE BOLT Ø		
AACAR06	M6 x 40 Ø10	**106,210**	10	50	600
AACAR08	M8 x 50 Ø14	**142,907**	12	50	300
AACAR10	M10 x 60 Ø16	**219,120**	14	50	200
AACAR12	M12 x 80 Ø20	**368,000**	17	25	100

Anti-spin sleeve anchor, for heavy-duty loads — HI

SOLID — Solid brick, Stone, Concrete, Reinforced concrete — kg. — ZINC

CODE	SIZE	€/100	SHIELD LENGHT		
AHICA0645	M6 x 45 Ø12	**81,337**	41	100	1.200
AHICA0855	M8 x 55 Ø14	**90,653**	45	50	600
AHICA1065	M10 x 65 Ø16	**115,923**	57	50	300
AHICA1275	M12 x 75 Ø20	**155,590**	70	25	150
AHICA1690	M16 x 90 Ø24	**257,610**	90	10	60

HI-CA

Shield



02 P. 372 Technical info

STAINLESS STEEL — Solid brick, Stone, Concrete, Reinforced concrete — kg. — A2 INOX

CODE	SIZE	€/100	SHIELD LENGHT		
AHICI0645	M6 x 45 Ø12	**600,255**	40	100	600
AHICI0855	M8 x 55 Ø14	**843,040**	48	50	600
AHICI1065	M10 x 65 Ø16	**1.125,520**	59	50	300

HI-CI

A2 Stainless steel shield



02 P. 372 Technical info

SOLID — Solid brick, Stone, Concrete, Reinforced concrete — kg. — ZINC

CODE	SIZE	€/100		
AHITO0645	M6 x 45 Ø12	**100,700**	100	600
AHITO0855	M8 x 55 Ø14	**142,440**	50	300
AHITO1065	M10 x 65 Ø16	**201,297**	50	200
AHITO1275	M12 x 75 Ø20	**306,450**	25	100
AHITO1690	M16 x 90 Ø24	**568,107**	10	40

HI-TO

Loose bolt 8.8



02 P. 372 Technical info

SOLID — Solid brick, Stone, Concrete, Reinforced concrete — kg. — ZINC

CODE	SIZE	€/100	APERTURE HOOK		
AHIGA0645	M6 x 45 Ø12	**158,913**	10	100	400
AHIGA0855	M8 x 55 Ø14	**232,313**	11	50	300
AHIGA1065	M10 x 65 Ø16	**344,433**	14	50	100
AHIGA1275	M12 x 75 Ø20	**534,877**	18	25	75
AHIGA1690	M16 x 90 Ø24	**1.041,737**	19	10	30

HI-GA

Hook bolt



02 P. 372 Technical info

SOLID — Solid brick, Stone, Concrete, Reinforced concrete — kg. — ZINC

CODE	SIZE	€/100	EYE BOLT Ø		
AHIAR0645	M6 x 45 Ø12	**159,017**	10	100	400
AHIAR0855	M8 x 55 Ø14	**206,627**	12	50	300
AHIAR1065	M10 x 65 Ø16	**278,047**	14	50	200
AHIAR1275	M12 x 75 Ø20	**455,297**	17	25	75
AHIAR1690	M16 x 90 Ø24	**992,637**	23	10	30

HI-AR

Eye bolt



02 P. 373 Technical info

EPS

Metal anchor for fixing window and door frames

MULTI-MATERIAL

Stone | Hollow brick | Solid brick | Concrete



02 Technical info P. 373

CODE	SIZE	€/100		THICKNESS MAX. FIXTURE		
EPS6072	M6 x 72 Ø10	**62,647**	PZ3	40	100	600
EPS6092	M6 x 92 Ø10	**75,787**	PZ3	60	100	600
EPS6112	M6 x 112 Ø10	**83,423**	PZ3	80	100	200
EPS6132	M6 x 132 Ø10	**93,710**	PZ3	100	100	200
EPS6152	M6 x 152 Ø10	**106,233**	PZ3	120	100	400
EPS6182	M6 x 182 Ø10	**134,963**	PZ3	150	100	300

TRA

Express nail for batten fixings to concrete floors

SOLID

Stone | Aerated concrete | Reinforced concrete | Concrete



02 Technical info P. 373

CODE	SIZE	€/100	THICKNESS MAX. FIXTURE		
TRA6050	6 x 50 Ø6	**19,480**	20	200	2.400
TRA6060	6 x 60 Ø6	**20,977**	30	200	1.200
TRA6080	6 x 80 Ø6	**23,317**	50	200	1.200
TRA8070	8 x 70 Ø8	**31,133**	30	100	1.200
TRA8090	8 x 90 Ø8	**36,790**	50	100	600
TRA8110	8 x 110 Ø8	**42,633**	70	100	600
TRA8130	8 x 130 Ø8	**56,023**	90	100	600
TRA8150	8 x 150 Ø8	**62,807**	110	100	600

Blister

CODE	SIZE	€/BAG	PCS.	BAGS
BZTRA6050	6 x 50 Ø6	**3,427**	10	15
BZTRA6060	6 x 60 Ø6	**3,427**	10	15
BZTRA6080	6 x 80 Ø6	**3,427**	10	15
BZTRA8070	8 x 70 Ø8	**3,427**	10	15
BZTRA8090	8 x 90 Ø8	**4,622**	10	15
BZTRA8110	8 x 110 Ø8	**4,622**	10	12
BZTRA8130	8 x 130 Ø8	**4,622**	8	12
BZTRA8150	8 x 150 Ø8	**4,622**	8	12

AV

Screw anchor for ventilated façades

AVR

Threaded



STAINLESS STEEL

Stone | Hollow brick | Solid brick | Aerated concrete | Hollow concrete | Reinforced concrete | Concrete

CODE	SIZE	€/100		
AVR08120	M8 x 120 Ø8	**311,053**	100	600
AVR08150	M8 x 150 Ø8	**344,967**	100	600
AVR10120	M10 x 120 Ø10	**388,977**	100	400
AVR10150	M10 x 150 Ø10	**445,140**	100	200
AVR10180	M10 x 180 Ø10	**495,263**	100	200

AVC

Corrugated



STAINLESS STEEL

Stone | Hollow brick | Solid brick | Aerated concrete | Hollow concrete | Reinforced concrete | Concrete

CODE	SIZE	€/100		
AVC08120	8 x 120 Ø8	**335,017**	100	600
AVC08150	8 x 150 Ø8	**375,020**	100	600
AVC10120	10 x 120 Ø10	**428,867**	100	400
AVC10150	10 x 150 Ø10	**491,217**	100	200
AVC10180	10 x 180 Ø10	**554,563**	100	200

Scaffolding anchoring ANFA

AN-23

Eye diameter 23 mm

MULTI-MATERIAL — Stone, Hollow brick, Solid brick, Aerated concrete, Hollow concrete, Concrete, Reinforced concrete — ZINC

CODE	SIZE	€/100	Ø PLUG	HOLE DEPTH MIN.	MIN. ANCHOR DEPTH	EYE BOLT Ø		
ANFA2309	12 x 90 Ø14-Ø16	**209,067**	TC-SO Ø14-Ø16	100	90	23	20	120
ANFA2312	12 x 120 Ø14-Ø16	**238,197**	TC-SO Ø14-Ø16	130	120	23	20	80
ANFA2316	12 x 160 Ø14-Ø16	**288,697**	TC-SO Ø14-Ø16	170	160	23	20	60
ANFA2319	12 x 190 Ø14-Ø16	**311,297**	TC-SO Ø14-Ø16	200	190	23	20	60
ANFA2323	12 x 230 Ø14-Ø16	**358,557**	TC-SO Ø14-Ø16	240	230	23	20	40
ANFA2330	12 x 300 Ø14-Ø16	**491,730**	TC-SO Ø14-Ø16	310	300	23	10	20
ANFA2335	12 x 350 Ø14-Ø16	**535,263**	TC-SO Ø14-Ø16	360	350	23	10	-

* Recommended plug TCSO16140

02 P. 376 Technical info

AN-51

Eye diameter 51 mm

MULTI-MATERIAL — Stone, Hollow brick, Solid brick, Aerated concrete, Hollow concrete, Concrete, Reinforced concrete — ZINC

CODE	SIZE	€/100	Ø PLUG	HOLE DEPTH MIN.	MIN. ANCHOR DEPTH	EYE BOLT Ø		
ANFA5114	12 x 140 Ø14-Ø16	**371,063**	TC-SO Ø14-Ø16	150	140	51	20	60
ANFA5116	12 x 160 Ø14-Ø16	**405,077**	TC-SO Ø14-Ø16	170	160	51	20	40
ANFA5120	12 x 200 Ø14-Ø16	**524,637**	TC-SO Ø14-Ø16	210	200	51	20	40
ANFA5124	12 x 240 Ø14-Ø16	**577,930**	TC-SO Ø14-Ø16	250	240	51	20	40

* Recommended plug TCSO16140

02 P. 377 Technical info

AN-50 CT

Eye diameter 50 mm + zamak shield M10

MULTI-MATERIAL — Stone, Hollow brick, Solid brick, Aerated concrete, Hollow concrete, Concrete, Reinforced concrete — ZAMAK

CODE	SIZE	€/100	HOLE DEPTH MIN.	EYE BOLT Ø		
ANFAZ5021	M10 x 210 Ø16	**1.210,473**	120	50	10	20

02 P. 377 Technical info

TC-SO 2

Nylon plug, 2 wings

MULTI-MATERIAL — Stone, Hollow brick, Solid brick, Aerated concrete, Hollow concrete, Concrete, Reinforced concrete — kg. — NYLON

CODE	SIZE	€/100		
TCSO14075	14 x 75 Ø14	**27,137**	20	240
TCSO14100	14 x 100 Ø14	**34,986**	20	240

TC-SO 8

Nylon plug, 8 wings

MULTI-MATERIAL — Stone, Hollow brick, Solid brick, Aerated concrete, Hollow concrete, Concrete, Reinforced concrete — kg. — NYLON

CODE	SIZE	€/100		
TCSO14130	14 x 130 Ø14	**69,432**	20	240
TCSO14160	14 x 160 Ø14	**78,222**	20	120
TCSO16140	16 x 140 Ø16	**153,209**	20	120
TCSO16160	16 x 160 Ø16	**163,142**	20	80
TCSO16200	16 x 200 Ø16	**168,439**	20	60
TCSO16240	16 x 240 Ø16	**191,504**	20	40

AN-TA

Cap for wall plug holes

MULTI-MATERIAL — Solid brick, Aerated concrete, Hollow concrete, Concrete, Reinforced concrete — NYLON

CODE	SIZE	€/100	DRILL Ø	HOLE DEPTH MIN.	MIN. ANCHOR DEPTH		
ANFATA37B	13 x 37 Ø6	**27,027**	6	130	33	100	600
ANFATA70B	13 x 70 Ø6	**32,555**	6	180	33	100	300



CHEMICAL FIXINGS

SELECTION TABLE



	Universal Polyester	Polyester PLUS	Styrene free polyester PLUS	Styrene free polyester PLUS. Stone	Vinylester	Styrene free vinylester	Styrene free hybrid resin	Styrene free hybrid resin. Winter	Pure epoxy 1:1	Pure epoxy 3:1
	MO-PU	**MO-P+**	**MO-PS+**	**MO-PSP+**	**MO-V**	**MO-VS**	**MO-H**	**MO-HW**	**MOPURE**	**MOPUR3**
Option 1							•	•	•	•
Option 7	•	•	•	•	•	•				
						•	•		•	•
			•	•		•	•	•		
										•
							•	•	•	
							•	•		•
									•	
	•	•	•		•	•	•		•	•
	•	•	•		•	•	•		•	•
							•	•		•
			•	•		•	•	•		
	•	•	•	•	•	•	•	•	•	•
							•		•	•
						•	•		•	•
	•	•	•	•		•	•	•		
	•	•	•	•	•	•	•	•		
	•	•	•	•			•	•		
	•	•	•	•	•	•	•	•	•	•
	•	•	•	•	•	•	•	•	•	•
	•	•	•	•	•	•	•	•		•
								•		
	•	•	•	•	•	•	•		•	•

INDEX
A PERFECT FIXING

Chemical fixings MO

MO-PU

Universal polyester.
Opt.7 ETA Assessed



CHEMICAL

Hollow brick | Solid brick | Solid brick | Concrete

kg.

CODE	SIZE	€/1PC	
MOPU300	300 ml.	14,478	12
MOPU410	410 ml.	17,508	12



M8-M24

MO-P+

Polyester PLUS.
Opt.7 ETA Assessed



CHEMICAL

Hollow brick | Solid brick | Solid brick | Concrete

kg.

CODE	SIZE	€/1PC	
MOP300	300 ml.	15,224	12
MOP410	410 ml.	17,987	12



M8-M24

MO-PS+

Polyester PLUS styrene free with Working time indicator.
Opt.7 ETA Assessed



CHEMICAL

Hollow brick | Solid brick | Hollow concrete | Concrete

kg.

CODE	SIZE	€/1PC	
MOPS300	300 ml.	17,781	12
MOPS410	410 ml.	22,408	12
KIT MO-PS			
MOPS300EP	300 ml.	29,507	1

Content:
- Cartridge MOPS300 (300 ml.) - x1
- Nozzle MORCANU x2
- Stud bolt MOES08110 (M8 x 110 8) - x4
- Plastic sleeve MOTN15085 (15 x 85) - x4

See video



Do you know for how long you can handle a chemical anchor once it has been applied?

A new formula to MO-PS+ makes the mortar change colour once the curing process begins, indicating that it can no longer be handled.



M8-M24

MO-PSP+

Polyester PLUS styrene free stone color.
Opt.7 ETA Assessed



CHEMICAL

Hollow brick | Solid brick | Hollow concrete | Concrete

kg.

CODE	SIZE	€/1PC	
MOPSP300	300 ml.	19,397	12
MOPSP410	410 ml.	24,444	12



M8-M24

MO-AC

Accessories for chemical fixings

MO-V

Vinylester.
Opt.7 ETA Assessed



CHEMICAL — Concrete — kg.

CODE	SIZE	€/1PC	
MOV300	300 ml.	**19,047**	12
MOV410	410 ml.	**23,084**	12


M8-M24

MO-VS

Vinylester styrene free.
Opt.7 ETA Assessed



CHEMICAL — Hollow brick — Concrete — kg.

CODE	SIZE	€/1PC	
MOVS300	300 ml.	**22,049**	12
MOVS410	410 ml.	**27,045**	12


Ø8-Ø20 M8-M24

MO-H

Hybrid.
Opt.1 ETA Assessed



CHEMICAL — Solid brick — Concrete — Reinforced concrete — Reinforced concrete — kg.

CODE	SIZE	€/1PC	
MOH300	300 ml.	**25,961**	12
MOH410	410 ml.	**30,200**	12


Ø8-Ø25 Ø8-Ø32 M8-M30

MO-HW

Hybrid WINTER version
for low temperatures.
Opt.1 ETA Assessed



CHEMICAL — Solid brick — Concrete — Reinforced concrete — kg.

CODE	SIZE	€/1PC	
MOHW300	300 ml.	**27,258**	12
MOHW410	410 ml.	**31,990**	12


Ø8-Ø32 M8-M30

Chemical fixings MO

CHEMICAL

Concrete | Reinforced concrete | Reinforced concrete

kg.

CODE	SIZE	€/1PC	
MOPURE600	600 ml.	**77,068**	12



MOPURE

Pure Epoxy 1:1.
Opt.1 ETA Assessed


Ø8-Ø25


Ø8-Ø32


M8-M30

INDEX CAL

CHEMICAL

Concrete | Reinforced concrete | Reinforced concrete

kg.

CODE	SIZE	€/1PC	
MOPUR30385	385 ml.	**55,804**	12
MOPUR30585	585 ml.	**74,731**	12



MOPUR3

Pure Epoxy 3:1.
Opt.1 ETA Assessed


Ø8-Ø32


Ø8-Ø32


M8-M30

WRAS

INDEXmor CLOUD

ONLINE SOFTWARE TO CALCULATE CHEMICAL MORTARS

The software makes it possible to calculate online how many cartridges will need to be used depending on the parameters entered, both in brick and in concrete (measuring rod and corrugated bar).

Parameters in Concrete:

- Selection of element to install (Measuring rod or corrugated bar).
- Number of holes to fill.
- Selection of metrics (M8 - M32).
- Depth of hole.
- Use of the cartridge (optimal, good, poor).

Parameters in Brick:

- Number of holes to fill.
- Selection of metrics (M8 - M12).
- Possibility to include threaded sieve in the calculation.

Benefits:

- Software 100% online.
- Ease of use. Responsive design.
- Multilingual: Available in Spanish, English, French, German and Portuguese.

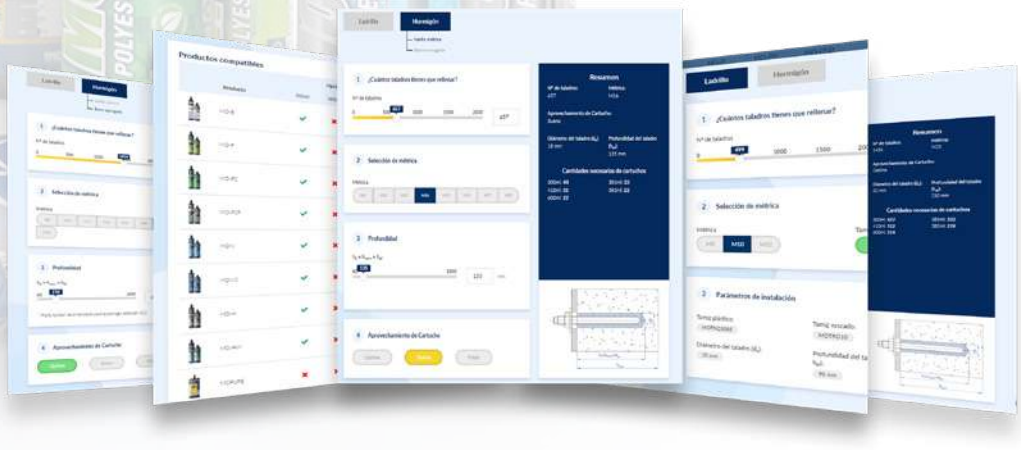

MO Chemical fixings

MO-PIS

Guns



CODE	MODEL	CARTDRIDGE SIZE	€/1 PC	
MOPISTO	Manual	410 ml.	47,267	1
MOPISPR	Professional	410 ml.	116,736	1
MOPISSI	Silicone	170ml. / 300 ml.	27,045	1
MOPISPUR6	MOPURE600	600 ml.	63,702	1
MOPISNEU	Pneumatic	410 ml.	1.545,829	1
MOPISP3385	385 ml.	385 ml.	128,879	1
MOPISP3585	585 ml.	585 ml.	146,358	1

MO-AC

Mixer nozzles and more

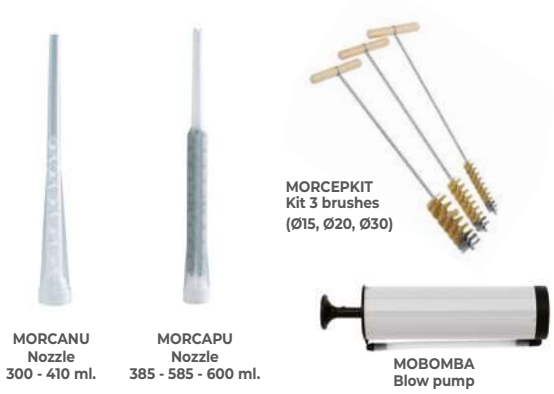

CODE	MODEL	€/1 PC		
MOBOMBA	Blow pump	15,920	1	1
MORCANU	Nozzle 300 - 410 ml.	1,034	12	1008
MORCAPU	Nozzle 385 - 585 - 600 ml.	1,582	12	24
MORCEPKIT	Kit brushes	77,064	1	1

MO-TN

Plastic sleeve

Ny NYLON

CODE		SIZE	€/100	MIN. ORDER QTY.		
MOTN12050		12 x 50	43,457	24	12	2256
MOTN12080	NEW	12 x 80	38,593	24	12	2256
MOTN15085		15 x 85	38,213	24	12	1500
MOTN15130		15 x 130	45,073	24	12	1008
MOTN20085		20 x 85	43,487	24	12	1008

Self-Service

CODE	SIZE	€/BAG	PCS.	BAGS
LSMOTN12050	12 x 50	3,014	4	7
LSMOTN15085	15 x 85	3,003	4	6
LSMOTN20085	20 x 85	2,652	2	6

MO-ES

Stud bolt



Z ZINC

CODE	SIZE	€/100		
MOES06070	M6 x 70 Ø6	64,533	12	540
MOES08110	M8 x 110 Ø8	109,217	12	288
MOES10115	M10 x 115 Ø10	145,060	12	144
MOES12110	M12 x 110 Ø12	193,273	12	144

Self-Service

CODE	SIZE	€/BAG	PCS.	BAGS
LSMOES06070	M6 x 70 Ø6	4,649	4	10
LSMOES08110	M8 x 110 Ø8	6,633	4	7
LSMOES10115	M10 x 115 Ø10	8,183	4	6
LSMOES12110	M12 x 110 Ø12	10,278	4	6

MO-TR

Sleeve with internal thread



Z ZINC

CODE	SIZE	€/100		
MOTR008	M8 x 80 Ø12	222,763	12	540
MOTR010	M10 x 80 Ø14	298,420	12	288
MOTR012	M12 x 80 Ø16	361,320	12	288

MO-TM

Metal sleeve



Z ZINC

CODE	SIZE	€/100		
MOTM12100	12 x 1000 Ø11	1.938,787	10	-
MOTM16100	16 x 1000 Ø14	2.195,560	10	-
MOTM22100	22 x 1000 Ø21	2.578,860	5	20

Epoxy resin, quartz and a phial of hardener. Option 8 ETA Assessed

CA-QU

CHEMICAL

Reinforced concrete | Stone | Solid brick | Concrete

kg.

CODE	SIZE	€/100		
CAQU008	8 x 80 Ø10	**197,283**	10	500
CAQU010	10 x 90 Ø12	**201,817**	10	500
CAQU012	12 x 110 Ø14	**210,423**	10	200
CAQU016	16 x 125 Ø18	**233,947**	10	200

CODE	SIZE	€/100		
CAQU020	20 x 170 Ø25	**476,007**	6	60
CAQU024	24 x 210 Ø28	**557,323**	6	60
•CAQU030	30 x 280 Ø35	**993,820**	6	30

• Non-assessed sizes



02 P. 377 Technical info

Stud bolt for chemical anchor, with nut and washer

EQ

EQ-AC

Zinc-plated

CHEMICAL

Reinforced concrete | Stone | Hollow brick | Solid brick | Aerated concrete | Hollow concrete | Concrete

ZINC

CODE		SIZE	€/100		
EQAC08110		M8 x 110	**91,040**	10	240
EQAC10130		M10 x 130	**146,253**	10	120
EQAC10190	NEW	M10 x 190	**229,045**	10	30
EQAC12160		M12 x 160	**233,143**	10	120
EQAC12220	NEW	M12 x 220	**353,265**	10	30
EQAC16190		M16 x 190	**441,927**	10	40

CODE		SIZE	€/100		
EQAC16250	NEW	M16 x 250	**637,386**	10	30
EQAC20260		M20 x 260	**955,723**	6	12
EQAC20350	NEW	M20 x 350	**1.401,619**	6	-
EQAC24300		M24 x 300	**1.452,567**	6	12
EQAC24380	NEW	M24 x 380	**2.317,808**	6	-
EQAC30330		M30 x 330	**3.017,783**	6	12



EQ-8.8 NEW

Zinc-plated 8.8

CHEMICAL

Reinforced concrete | Stone | Hollow brick | Solid brick | Aerated concrete | Hollow concrete | Concrete

CODE	SIZE	€/100		
EQ8808110	M8 x 110	**95,592**	10	240
EQ8810130	M10 x 130	**153,566**	10	120
EQ8812160	M12 x 160	**240,498**	10	60

CODE	SIZE	€/100		
EQ8816190	M16 x 190	**388,592**	6	24
EQ8820260	M20 x 260	**809,847**	6	24
EQ8824300	M24 x 300	**1.295,507**	6	12



EQ-A2

A2 Stainless steel

CHEMICAL

Reinforced concrete | Stone | Hollow brick | Solid brick | Aerated concrete | Hollow concrete | Concrete

A2 INOX

CODE	SIZE	€/100		
EQA208110	M8 x 110	**310,533**	10	240
EQA210130	M10 x 130	**513,190**	10	120
EQA212160	M12 x 160	**850,517**	10	120
EQA216190	M16 x 190	**1.762,247**	10	40

CODE	SIZE	€/100		
EQA220260	M20 x 260	**3.368,117**	6	12
EQA224300	M24 x 300	**5.382,437**	6	12
EQA230330	M30 x 330	**9.820,060**	6	12



EQ-A4

A4 Stainless steel

CHEMICAL

Reinforced concrete | Stone | Hollow brick | Solid brick | Aerated concrete | Hollow concrete | Concrete

A4 INOX

CODE	SIZE	€/100		
EQA408110	M8 x 110	**356,573**	10	240
EQA410130	M10 x 130	**647,677**	10	120
EQA412160	M12 x 160	**1.114,120**	10	120
EQA416190	M16 x 190	**2.297,417**	10	40

CODE	SIZE	€/100		
EQA420260	M20 x 260	**5.313,967**	6	12
EQA424300	M24 x 300	**8.758,463**	6	12
EQA430330	M30 x 330	**15.449,990**	6	12



Selection table

						
	MSPRB290	MSPRG290	MSPRM290	MSPRN290	MSTR290	MSSF290
CE	●	●	●	●		
ECT	●	●	●	●		●
A+	●	●	●	●	●	●
	●	●	●	●	●	●
	●	●	●	●		
	●	●	●	●	●	●
	●	●	●	●	●	●
U.V.	●	●	●	●	●	●
NO DRIP	●	●	●	●	●	●
+90°C -40°C	●	●	●	●	●	●
+25°C +05°C WATERPROOF	●	●	●	●	●	●
WET SURFACE	●	●	●	●	●	●
	●	●	●	●	●	●
	300 %	300 %	300 %	300 %	250 %	200 %
	150 kg/10 cm²	150 kg/10 cm²	150 kg/10 cm²	150 kg/10 cm²	140 kg/10 cm²	430 kg/10 cm²
	●	●	●	●	●	●
	●	●	●	●	●	●
	●	●	●	●	●	●
					●	
1' sec						●

Adhesives Hybrid MS Polymer — MS

CHEMICAL

Concrete · Aluminum · Pinewood · Solid brick · Porcelain

MS-PR

Adhesive MS Professional



CODE	COLOUR		€/PC	
MSPRB290		290 ml.	**11,399**	12
MSPRG290		290 ml.	**11,399**	12
MSPRM290		290 ml.	**11,399**	12
MSPRN290		290 ml.	**11,399**	12

APPLICATIONS

- Affixing and sealing in construction: shelves, roof fixings, gutters, decks, frame joints or structures subjected to vibrations.
- Filling cracks.
- Sealing of expansion joints, cisterns, containers and other aluminium elements.
- Product certified for use in the food processing industry
- (ISEGA Certificate).
- Adhesion to all types of materials (concrete, wood, metal, cork, aluminium, PVC, copper, brick, stone, porcelain...). Not recommended for Polyethylene (PE), Polypropylene (PP) and Polytetrafluoroethylene (PTFE).
- If the base material is unknown, tests must be done beforehand to ensure the product functions correctly.

150 kg/cm² · 300% Elastic · Multimaterial · Paint · Int/Ext

CHEMICAL

Aluminum · Glass · PVC frames · Aluminium frames

MS-TR

Adhesive MS Transparent



CODE	COLOUR		€/PC	
MSTR290		290 ml.	**16,131**	12

APPLICATIONS

- Colourless. Suitable for affixing glass, panes, acrylic, PVC, porcelain, ceramic and other transparent elements, outdoors or indoors.
- Attaching of materials with a transparent or visible join.
- Can be applied to damp surfaces.
- Adhesion to all types of materials (concrete, wood, metal, cork, aluminium, PVC, copper, brick, stone, porcelain...). Not recommended for Polyethylene (PE), Polypropylene (PP) and Polytetrafluoroethylene (PTFE).
- If the base material is unknown, tests must be done beforehand to ensure the product functions correctly.
- Suitable for assembling, sealing andaffixing.

140 kg/cm² · 250% Elastic · Cristal

CHEMICAL

Stone · Porcelain · Pinewood · Solid brick · Concrete

MS-SF

Adhesive MS Superfast High Tack



CODE	COLOUR		€/PC	
MSSF290		290 ml	**13,677**	12

APPLICATIONS

- Especially recommended for affixing and connecting heavy elements quickly and without additional fixings. Triples the holding capacity of other adhesives.
- Suitable for indoor and outdoor use. UVresistant.
- Adhesion to all types of materials (concrete, wood, metal, cork, aluminium, PVC, copper, brick, stone, porcelain...). Not recommended for Polyethylene (PE), Polypropylene (PP) and Polytetrafluoroethylene (PTFE).
- If the base material is unknown, tests must be done beforehand to ensure the product functions correctly.

Multimaterial · 1" sec Instant · Paint

Selection table

	SI-PR					SI-PRS		SI-UNI					SI-UNS		SE-ACR	
																
	SIPRB280	SIPRG280	SIPRM280	SIPRN280	SIPRT280	SIPRSB280	SIPRST280	SIUNIB280	SIUNIG280	SIUNIM280	SIUNIN280	SIUNIT280	SIUNSB280	SIUNST280	SEACRB280	SEACRG280
CE	●	●	●	●	●	●	●	●	●	●	●	●	●	●	●	●
A+	●	●	●	●	●	●	●									
A								●	●	●	●	●	●	●	●	●
	●	●	●	●	●	●	●	●	●	●	●	●	●	●	●	●
U.V.	●	●	●	●	●	●	●	●	●	●	●	●	●	●	●	●
NO DRIP	●	●	●	●	●	●	●	●	●	●	●	●	●	●	●	●
	●	●	●	●	●	●	●	●	●	●	●	●	●	●	●	●
WATERPROOF	●	●	●	●	●	●	●	●	●	●	●	●	●	●	●	●
+150°C -40°C	●	●	●	●	●	●	●	●	●	●	●	●	●	●		
+75°C -20°C															●	●
+25°C +05°C	●	●	●	●	●	●	●	●	●	●	●	●	●	●	●	●
NO SOLVENTS	●	●	●	●	●	●	●								●	●
	●	●	●	●	●	●	●	●	●	●	●	●	●	●	●	●
	●	●	●	●	●	●	●	●	●	●	●	●	●	●		
					●		●					●		●		
						●	●						●	●		
						●	●						●	●		
	●	●	●	●	●											
	●	●	●	●	●	●	●									
															●	●
															●	●

New range of silicones



Sealing, insulating and applicable to different indoor and outdoor surfaces

The INDEX® range of silicones is available in a variety of colours and properties to adapt to the requirements of each application. All of the silicones are water-resistant and can adapt to different materials, making them a professional solution for the assembly and sealing of joints on different surfaces.

SI Silicones

SI-PR

Professional neutral silicone for smooth and porous materials



U.V. NO DRIP +150°C -40°C +25°C +05°C NO SOLVENTS

CHEMICAL



CODE	COLOUR		€/PC	
SIPRB280		280 ml	**13,656**	12
SIPRG280		280 ml.	**13,656**	12
SIPRM280		280 ml.	**13,656**	12
SIPRN280		280 ml.	**13,656**	12
SIPRT280		280 ml.	**13,656**	12

CHARACTERISTICS

- Elastic and flexible
- Suitable for application on windows
- Available in white, black, brown (RAL 8016), grey (RAL 7030) and transparent
- Multi-material: suitable for use on aluminium and PVC carpentry, expansion joints, concrete, bricks, stone, wood, metals and glass)
- A+ Certificate for indoor emissions

SI-PRS

Professional neutra SANITARI silicone with fungicidal properties



U.V. NO DRIP +150°C -40°C +25°C +05°C

CHEMICAL



CODE	COLOUR		€/PC	
SIPRSB280		280 ml.	**13,656**	12
SIPRST280		280 ml.	**13,656**	12

CHARACTERISTICS

- They contain fungicides to avoid the appearance of mould
- Suitable for application in bathrooms and kitchens
- Elastic and flexible
- Suitable for application on windows
- Available in white and transparent
- Multi-material: suitable for use on aluminium and PVC carpentry, expasion joints, concrete, bricks, stone, wood, metals and glass)

SI-UNI

Multipurpose universal acetic silicone



U.V. NO DRIP +150°C -40°C +25°C +05°C NO SOLVENTS

CHEMICAL



CODE	COLOUR		€/PC	
SIUNIB280		280 ml.	**9,938**	12
SIUNIG280		280 ml.	**9,938**	12
SIUNIM280		280 ml.	**9,938**	12
SIUNIN280		280 ml.	**9,938**	12
SIUNIT280		280 ml.	**9,938**	12

CHARACTERISTICS

- Multiuse: suitable for use on aluminium, ceramic, glass and porcelain
- Not suitable for materials that are porous, oxidable or susceptible to acid attack
- Elastic and flexible
- Can be applied inside and outside

Silicones — SI

CHEMICAL

Plaster-board | Glass | Porcelain | Tile | Ceramic

SI-UNS

Multipurpose universal acetic SANITAR silicone with fungicidal properties



CODE	COLOUR		€/PC	
SIUNSB280	○	280 ml.	**9,938**	12
SIUNST280	⊗	280 ml.	**9,938**	12

CHARACTERISTICS

- Contains fungicide to prevent the appearance of mould
- Suitable for application in bathrooms and kitchens
- Elastic and flexible
- Suitable for application on windows
- Available in white and transparent
- Multiuse: Suitable for use on aluminium, ceramic, glass and porcelain
- Not suitable for materials that are porous, oxidable or susceptible to acid attack

CHEMICAL

SE-ACR

Acrylic sealant for joints & cracks



CODE	COLOUR		€/PC	
SEACRB280	○	280 ml.	**4,726**	12
SEACRG280	●	280 ml.	**4,726**	12

CHARACTERISTICS

- Suitable for sealing all types of joints, small holes, cracks in façades and walls, slits in shutter encasements, and door and window frames
- Suitable for application on porous materials (concrete, wood, ceramic tiles, gypsum board) and for repairing small cracks
- Flexible and high adherence
- Can be painted and varnished
- Very easy to apply
- Suitable for indoor & outdoor applications

Nozzles for MS adhesives and silicones — MS-CA



MSCAHT



MSCATP

CODE	MODEL	SUITABLE FOR	€/BAG	PCS.	BAGS
MSCATP	TAPON	MS-PR, MS-TR y Sliconas	**13,335**	12	18
MSCAHT	ANCHA	MS-SF	**13,973**	12	18

PU-S

Multipurpose polyurethane foam

PU-SP

For gun application



CHEMICAL

Stone | Stone | Hollow brick | Solid brick | Aerated concrete | Concrete | Hollow concrete

CODE	SIZE	€/1PC	COMBUSTION GRADE	APPLICATION TEMPERATURE	
PUSP750	750 ml.	**15,046**	EN 13501, parte 1 (E)	-40°C a +90°C	12

PU-SC

For nozzle application



CHEMICAL

Stone | Stone | Hollow brick | Solid brick | Aerated concrete | Concrete | Hollow concrete

CODE	SIZE	€/1PC	COMBUSTION GRADE	APPLICATION TEMPERATURE	
PUSC750	750 ml.	**14,305**	EN 13501, parte 1 (E)	-40°C a +90°C	12



NEW ECOFLEX NOZZLE

Its innovative blocking system means that the product can be kept and reused for several days, reducing product waste and being more environmentally friendly.

PU-T

Polyurethane foam for fixing tiles

PU-TP

For gun application.
Grey colour



CHEMICAL

Stone | Stone | Hollow brick | Solid brick | Aerated concrete | Concrete | Hollow concrete

CODE	SIZE	€/1PC	COMBUSTION GRADE	APPLICATION TEMPERATURE	
PUTP750	750 ml.	**15,859**	EN 13501, parte 1 (E)	-40°C a +90°C	12

NEW PU-TPR

For gun application.
Tile colour



CHEMICAL

Stone | Hollow brick | Tile | Solid brick | Aerated concrete | Hollow concrete | Concrete

CODE	SIZE	€/PC	
PUTPR750	750 ml.	**15,859**	12

Polyurethane foam for fixing tiles — PU-T

CHEMICAL

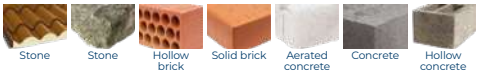

CODE	SIZE	€/1PC	COMBUSTION GRADE	APPLICATION TEMPERATURE	
PUTC750	750 ml.	**15,380**	EN 13501, parte 1 (E)	-40°C a +90°C	12



PU-TC

For nozzle application.
Grey colour

B3

Fire-resistant polyurethane foam — PU-F

CHEMICAL

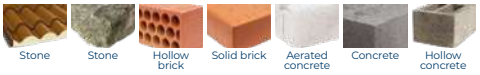

CODE	SIZE	€/1PC	COMBUSTION GRADE	APPLICATION TEMPERATURE	
PUFP750	750 ml.	**26,970**	DIN 4102, parte 1 (B1); BS 476, parte 20; EN 13501, parte 1 (B-s1, d0); EN 13501, parte 2 (EI 240)	-40°C a +90°C	12



PU-FP

For gun application

B1

CHEMICAL



CODE	SIZE	€/1PC	COMBUSTION GRADE	APPLICATION TEMPERATURE	
PUFC750	750 ml.	**26,158**	DIN 4102, parte 1 (B1); BS 476, parte 20; EN 13501, parte 1 (B-s1, d0); EN 13501, parte 2 (EI 240)	-40°C a +90°C	12



PU-FC

For nozzle application

ECOFLEX

B1



NEW ECOFLEX NOZZLE

Its innovative blocking system means that the product can be kept and reused for several days, reducing product waste and being more environmentally friendly.

Polyurethane adhesive for ETICS/panels. For gun application — PU-EP

CHEMICAL



CODE	SIZE	€/1PC	COMBUSTION GRADE	APPLICATION TEMPERATURE	
PUEP750	750 ml.	**24,875**	EN 13501-1 (E)	-40°C a +90°C	12

ASSESSED ACCORDING TO ETAG 004



PU-EP

Para aplicación con pistola

B2

PU-AC

Accesorios para espumas de poliuretano

PU-PI

Professional gun



CODE	MODEL	CARTDRIDGE SIZE	€/1 PC	
PUPI01	**750 ml.**	750 ml.	**99,306**	1

PU-PI 2

Basic gun



CODE	MODEL	CARTDRIDGE SIZE	€/1 PC	
PUPI02	**750 ml.**	750 ml.	**37,853**	1

PU-CA

Nozzle

CODE	CARTDRIDGE SIZE	€/BAG	PCS.	BAGS
PUCA01	**750 ml.**	**5,345**	12	18

PU-CL

Cleaner for polyurethane foam accessories





CODE	SIZE	€/1 PC	
PUCL500	**500 ml.**	**15,602**	12



PLASTIC FIXINGS

T-NUX



High-performance universal nylon plugs for use in concrete and masonry are a versatile and professional solution. They allow installation with the highest security guarantees thanks to the fact that they have ETE approval and fire resistance.

Their design allows the plug to adapt to any type of base material, whether solid or hollow. Also, it allows the load to be spread throughout the entire plug, thanks to a controlled expansion at different points of the material where it is installed.

DESIGN AND GEOMETRY

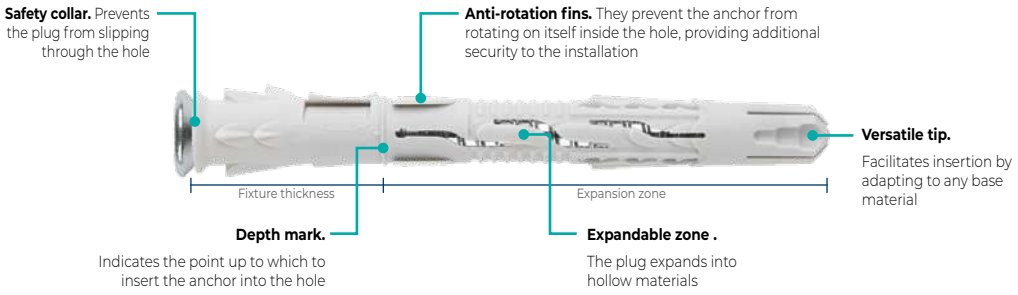

QUALITIES AND ADVANTAGES



MAXIMUM VERSATILITY. MULTI-MATERIAL.

Their design allows the plug to adapt to any type of base material, whether solid or hollow. Particularly suitable for when the base material where the fixation is made is unknown.

MAXIMUM GUARANTEES. PRODUCTS APPROVED ACCORDING TO THE HIGHEST QUALITY STANDARDS.

- Approved (ETA 14/0467) for non-structural uses in concrete, aerated concrete, solid brick, hollow brick and concrete block (in sizes Ø8 and Ø10)
- Approved for fire resistance R30-R120 in concrete

*The anchor is approved when the plug and the screw are used together, not separately. Using approved anchors provides safety and quality to the anchor, meeting the highest quality standards.

QUALITY PRODUCT

The T-NUX anchor is made up of two top quality elements, a Polyamide 6 nylon plug and a screw (see different alternatives in the range. The loose plug is also available).



MAXIMUM PERFORMANCE

The geometry of the plug means that when inserting the screw, the plug expands in a uniform way and provides a high-performance fixing of up to 202 Kg per anchor (see technical data sheet).

APPLICATIONS



- Fixing of window and door frames.
- Garage doors.
- Railings.
- Balustrades.
- Fixing of screens.
- Rehabilitation of façades.
- Fixing of metal substructures for ventilated façades.
- Interior and exterior uses.
- Fixing of stone panels for façade cladding.

100% INDEX MANUFACTURED

This allows us to ensure a rigorous control of processes, guarantee the highest quality in our products, provide the best service and obtain a competitive global cost.

RANGE



PRODUCT	T-NUX A	T-NUX A A4	T-NUX E	T-NUX E A4	T-NUX T	T-FUX E	T-NUX
HEAD OF THE SCREW	Countersunk	Countersunk	Hexagonal	Hexagonal	Tamper-proof truss	Hexagonal without washer	Stud
COATING/SCREW MATERIAL	Z ZINC	A4 INOX	Z ZINC	A4 INOX	Z ZINC	Z ZINC	-
TYPE OF HEAD OF THE PLUG							
CE NON STRUCTURAL FIXINGS	✓	✓	✓	✓	✓	✓	
FIRE RESISTANCE	✓	✓	✓	✓	✓	✓	

THE PERFECT COATING ACCORDING TO THE EXPECTED LEVELS OF CORROSION

A4 Stainless Steel: Suitable for indoor and outdoor applications, in coastal or industrial areas, areas exposed to high pollution levels and areas near roads.

Zinc coating: suitable for use in dry indoor conditions (category C1 according to ISO 923), for a period of 50 years.

T-NUX

Universal high performance nylon plug

MULTI-MATERIAL

Stone · Hollow brick · Cracked concrete · Solid brick · Aerated concrete · Hollow concrete · Concrete

CODE	SIZE	€/100		THICKNESS MAX. FIXTURE		
••TNUXA08060	8 x 60 Ø8	**55,730**	TX30	-	50	600
• TNUXA08080	8 x 80 Ø8	**61,000**	TX30	10	50	600
• TNUXA08100	8 x 100 Ø8	**76,253**	TX30	30	50	600
• TNUXA08120	8 x 120 Ø8	**87,190**	TX30	50	50	300
•TNUXA10060	10 x 60 Ø10	**82,597**	TX40	-	50	300
TNUXA10080	10 x 80 Ø10	**101,540**	TX40	10	50	300
TNUXA10100	10 x 100 Ø10	**114,730**	TX40	30	50	300
TNUXA10120	10 x 120 Ø10	**132,177**	TX40	50	50	300
TNUXA10140	10 x 140 Ø10	**164,220**	TX40	70	50	300
TNUXA10160	10 x 160 Ø10	**175,280**	TX40	90	50	200
TNUXA10180	10 x 180 Ø10	**239,477**	TX40	110	50	150
TNUXA10200	10 x 200 Ø10	**290,320**	TX40	130	50	150
TNUXA10230	10 x 230 Ø10	**338,530**	TX40	160	50	100

• Non-assessed sizes
• Non-assessed sizes for Fire Resisten

Blister

CODE	SIZE	€/BAG	PCS.	BAGS
BZTNXA08080	8 x 80 Ø8	**3,427**	2	15
BZTNXA08100	8 x 100 Ø8	**3,427**	2	15
BZTNXA08120	8 x 120 Ø8	**3,427**	2	15
BZTNXA10080	10 x 80 Ø10	**3,427**	2	15
BZTNXA10100	10 x 100 Ø10	**3,427**	2	15
BZTNXA10120	10 x 120 Ø10	**3,427**	2	15

Window Box

CODE	SIZE	€/BOX	PCS.	BOXES
VTNUXA08080	8 x 80 Ø8	**6,048**	8	8
VTNUXA08100	8 x 100 Ø8	**7,559**	8	8
VTNUXA10080	10 x 80 Ø10	**10,063**	8	8
VTNUXA10100	10 x 100 Ø10	**11,373**	8	8

Self-Service

CODE	SIZE	€/BAG	PCS.	BAGS
LSTNXA08080	8 x 80 Ø8	**7,074**	10	8
LSTNXA08100	8 x 100 Ø8	**8,422**	10	8
LSTNXA08120	8 x 120 Ø8	**9,273**	8	8
LSTNXA10080	10 x 80 Ø10	**9,968**	8	8
LSTNXA10100	10 x 100 Ø10	**7,602**	6	6

T-NUX A

Countersunk head. Zinc-plated. ETA Assessed



02 P. 377 Technical info

Available in different coatings.
Ask for price and delivery time.

STAINLESS STEEL

Stone · Hollow brick · Cracked concrete · Solid brick · Aerated concrete · Hollow concrete · Concrete

CODE	SIZE	€/100		THICKNESS MAX. FIXTURE		
• TNXA408080	8 x 80 Ø8	**264,814**	TX30	10	50	600
• TNXA408100	8 x 100 Ø8	**319,321**	TX30	30	50	600
• TNXA408120	8 x 120 Ø8	**394,477**	TX30	50	50	300
TNXA410080	10 x 80 Ø10	**337,061**	TX40	10	50	300
TNXA410100	10 x 100 Ø10	**402,435**	TX40	30	50	300
TNXA410120	10 x 120 Ø10	**468,663**	TX40	50	50	300
TNXA410140	10 x 140 Ø10	**555,749**	TX40	70	50	300

• Non-assessed sizes for Fire Resisten

T-NUX A A4

A4 Stainless steel. Countersunk head. ETA Assessed



02 P. 378 Technical info

MULTI-MATERIAL

Stone · Hollow brick · Cracked concrete · Solid brick · Aerated concrete · Hollow concrete · Concrete

CODE	SIZE	€/100			THICKNESS MAX. FIXTURE		
••TNUXE08060	8 x 60 Ø8	**64,090**	TX30	H10	-	50	600
• TNUXE08080	8 x 80 Ø8	**73,037**	TX30	H10	10	50	600
• TNUXE08100	8 x 100 Ø8	**92,263**	TX30	H10	30	50	300
• TNUXE08120	8 x 120 Ø8	**108,050**	TX30	H10	50	50	300
•TNUXE10060	10 x 60 Ø10	**94,403**	TX40	H13	-	50	300
TNUXE10080	10 x 80 Ø10	**111,317**	TX40	H13	10	50	300
TNUXE10100	10 x 100 Ø10	**129,080**	TX40	H13	30	50	300
TNUXE10120	10 x 120 Ø10	**172,220**	TX40	H13	50	50	300
TNUXE10140	10 x 140 Ø10	**219,787**	TX40	H13	70	50	200
TNUXE10160	10 x 160 Ø10	**220,300**	TX40	H13	90	50	150
TNUXE10180	10 x 180 Ø10	**265,590**	TX40	H13	110	50	150
TNUXE10200	10 x 200 Ø10	**351,127**	TX40	H13	130	50	150
TNUXE10230	10 x 230 Ø10	**427,877**	TX40	H13	160	50	100

• Non-assessed sizes
• Non-assessed sizes for Fire Resisten

Blister

CODE	SIZE	€/BAG	PCS.	BAGS
BZTNXE08080	8 x 80 Ø8	**3,427**	2	15
BZTNXE08100	8 x 100 Ø8	**3,427**	2	15
BZTNXE08120	8 x 120 Ø8	**3,427**	2	15
BZTNXE10080	10 x 80 Ø10	**3,427**	2	15
BZTNXE10100	10 x 100 Ø10	**3,427**	2	15
BZTNXE10120	10 x 120 Ø10	**3,427**	2	15

Window Box

CODE	SIZE	€/BOX	PCS.	BOXES
VTNUXE08080	8 x 80 Ø8	**7,242**	8	8
VTNUXE08100	8 x 100 Ø8	**9,146**	8	8
VTNUXE10080	10 x 80 Ø10	**11,035**	8	8
VTNUXE10100	10 x 100 Ø10	**12,792**	8	8

Self-Service

CODE	SIZE	€/BAG	PCS.	BAGS
LSTNXE08080	8 x 80 Ø8	**8,064**	10	8
LSTNXE08100	8 x 100 Ø8	**10,190**	10	8
LSTNXE08120	8 x 120 Ø8	**10,696**	8	8
LSTNXE10080	10 x 80 Ø10	**7,377**	6	6
LSTNXE10100	10 x 100 Ø10	**8,556**	6	6

T-NUX E

Hexagonal head. Zinc-plated. ETA Assessed



02 P. 378 Technical info

Available in different coatings.
Ask for price and delivery time.

T-NUX

Universal high performance nylon plug

T-NUX E A4

A4 Stainless steel. Hexagonal head. ETA Assessed



02 P. 378 Technical info

STAINLESS STEEL

Stone · Hollow brick · Cracked concrete · Solid brick · Aerated concrete · Hollow concrete · Concrete

CODE	SIZE	€/100			THICKNESS MAX. FIXTURE		
• TNXE408080	8 x 80 Ø8	**371,738**	TX30	H10	10	50	600
• TNXE408100	8 x 100 Ø8	**440,603**	TX30	H10	30	50	300
TNXE410080	10 x 80 Ø10	**493,074**	TX40	H13	10	50	300
TNXE410100	10 x 100 Ø10	**514,943**	TX40	H13	30	50	300
TNXE410120	10 x 120 Ø10	**618,968**	TX40	H13	50	50	300
TNXE410140	10 x 140 Ø10	**722,024**	TX40	H13	70	50	200

• Non-assessed sizes for Fire Resisten

T-NUX T

Tamperproof Truss Head. Zinc-plated. ETA Assessed



02 P. 378 Technical info

MULTI-MATERIAL

Stone · Hollow brick · Cracked concrete · Solid brick · Aerated concrete · Hollow concrete · Concrete

CODE	SIZE	€/100		THICKNESS MAX. FIXTURE		
TNUXT10080	10 x 80 Ø10	**114,740**	TX40	10	50	300
TNUXT10100	10 x 100 Ø10	**129,647**	TX40	30	50	300
TNUXT10120	10 x 120 Ø10	**152,260**	TX40	50	50	200
TNUXT10140	10 x 140 Ø10	**189,173**	TX40	70	50	200
TNUXT10160	10 x 160 Ø10	**201,910**	TX40	90	50	200

*Tamperproof includes

Available in diferent coatings.
Ask for price and delivery time.

T-FUX E

Cylindrical head wall plug. Hexagonal head screw. Zinc-plated. ETA Assessed



02 P. 378 Technical info

MULTI-MATERIAL

Stone · Hollow brick · Cracked concrete · Solid brick · Aerated concrete · Hollow concrete · Concrete

CODE	SIZE	€/100		THICKNESS MAX. FIXTURE		
TFUXE10080	10 x 80 Ø10	**124,287**	TX40	10	50	300
TFUXE10100	10 x 100 Ø10	**144,123**	TX40	30	50	200
TFUXE10120	10 x 120 Ø10	**188,147**	TX40	50	50	200



Available in diferent coatings.
Ask for price and delivery time.

T-NUX

Nylon plug



MULTI-MATERIAL

Stone · Hollow brick · Cracked concrete · Solid brick · Aerated concrete · Hollow concrete · Concrete

CODE	SIZE	€/100		
TNUX08060	8 x 60	**25,637**	50	800
TNUX08080	8 x 80	**27,647**	50	600
TNUX08100	8 x 100	**31,870**	50	600
TNUX08120	8 x 120	**35,150**	50	600
TNUX10060	10 x 60	**33,043**	50	600
TNUX10080	10 x 80	**33,507**	50	600
TNUX10100	10 x 100	**40,777**	50	600
TNUX10120	10 x 120	**48,037**	50	600
TNUX10140	10 x 140	**62,563**	50	300

Polyamide 6.6 hammerfix nylon plug

TCA

MULTI-MATERIAL

Stone | Hollow brick | Adobe Brick | Solid brick | Aerated concrete | Hollow concrete | Concrete

TC-6A

6 winged nylon plug with countersunk screw



02 P. 378 Technical info

CODE	SIZE	€/100		THICKNESS MAX. FIXTURE		
TC6A08080	8 x 80 Ø8	**52,823**	TX30	15	100	600
TC6A08100	8 x 100 Ø8	**61,403**	TX30	35	100	400
TC6A08120	8 x 120 Ø8	**72,570**	TX30	55	100	400
TC6A10100	10 x 100 Ø10	**87,153**	TX40	25	100	300
TC6A10120	10 x 120 Ø10	**92,533**	TX40	40	100	300
TC6A10140	10 x 140 Ø10	**106,850**	TX40	60	100	300
TC6A10160	10 x 160 Ø10	**125,383**	TX40	85	100	200
TC6A10200	10 x 200 Ø10	**208,260**	TX40	125	100	-

MULTI-MATERIAL

Stone | Hollow brick | Adobe Brick | Solid brick | Aerated concrete | Hollow concrete | Concrete

TC-6E

6 winged nylon plug with hexagonal screw



02 P. 379 Technical info

CODE	SIZE	€/100		THICKNESS MAX. FIXTURE		
TC6E08080	8 x 80 Ø8	**60,477**	10	15	100	600
TC6E08100	8 x 100 Ø8	**70,507**	10	35	100	400
TC6E08120	8 x 120 Ø8	**83,813**	10	55	100	300
TC6E10100	10 x 100 Ø10	**101,857**	13	25	100	300
TC6E10120	10 x 120 Ø10	**105,613**	13	40	100	300
TC6E10140	10 x 140 Ø10	**124,653**	13	60	100	200
TC6E10160	10 x 160 Ø10	**147,283**	13	85	100	200
TC6E10200	10 x 200 Ø10	**248,573**	13	125	100	-

MULTI-MATERIAL

Stone | Hollow brick | Adobe Brick | Solid brick | Aerated concrete | Hollow concrete | Concrete

TC-2A

2 winged nylon plug with countersunk screw



02 P. 379 Technical info

CODE	SIZE	€/100		THICKNESS MAX. FIXTURE		
TC2A06060	6 X 60 Ø6	**26,780**	2	30	100	1.200
TC2A08060	8 X 60 Ø8	**35,360**	3	20	100	600
TC2A08080	8 x 80 Ø8	**46,650**	3	40	100	600
TC2A08100	8 x 100 Ø8	**59,347**	3	60	100	400
TC2A08120	8 x 120 Ø8	**72,227**	3	80	100	400
TC2A10065	10 x 65 Ø10	**67,863**	4	20	100	400
TC2A10080	10 x 80 Ø10	**72,183**	4	35	100	400
TC2A10100	10 x 100 Ø10	**77,363**	4	55	100	300
TC2A10115	10 x 115 Ø10	**84,600**	4	70	100	300
TC2A10135	10 x 135 Ø10	**95,183**	4	90	100	300
TC2A10160	10 x 160 Ø10	**111,933**	4	115	100	200

TC-SP

High expansion hammerfix plug

TC-SP

With countersunk head



02 P. 379 Technical info

MULTI-MATERIAL

Stone | Hollow brick | Solid brick | Concrete

CODE	SIZE	€/100		THICKNESS MAX. FIXTURE		
TCSP05027	5 x 27	**8,593**	PZ2	5	100	2.400
TCSP06032	6 x 32	**10,113**	PZ2	5	100	1.200
TCSP06040	6 x 40	**10,480**	PZ2	10	100	1.200

TC-SP EP

Plastic container



MULTI-MATERIAL

Stone | Hollow brick | Solid brick | Concrete

CODE	SIZE	€/JAR		THICKNESS MAX. FIXTURE	PCS X JAR
TCSPEP05027	5 x 27	**62,439**	PZ2	5	750
TCSPEP06032	6 x 32	**49,038**	PZ2	5	500
TCSPEP06040	6 x 40	**50,643**	PZ2	10	500



TC

Polyamide 6.6 Hammerfix plug. Preassembled saw-tooth screw

TC-A2

Countersunk plug and A2 stainless steel screw



02 P. 380 Technical info

STAINLESS STEEL

Stone | Hollow brick | Adobe Brick | Solid brick | Aerated concrete | Hollow concrete | Concrete

CODE	SIZE	€/100		THICKNESS MAX. FIXTURE		
TCA205030	5 x 30 Ø5	**38,072**	PZ2	5	100	2.400
TCA206040	6 x 40 Ø6	**52,017**	PZ2	10	100	1.200
TCA206060	6 x 60 Ø6	**64,710**	PZ2	30	100	1.200
TCA208060	8 x 60 Ø8	**101,847**	PZ3	20	100	600
TCA208080	8 x 80 Ø8	**119,480**	PZ3	40	100	600
TCA208100	8 x 100 Ø8	**157,150**	PZ3	60	100	600

TC-CC

Cylindrical head plug



02 P. 380 Technical info



MULTI-MATERIAL

Stone | Hollow brick | Adobe Brick | Solid brick | Aerated concrete | Hollow concrete | Concrete

CODE		SIZE	€/100		THICKNESS MAX. FIXTURE	MIN. ORDER QTY.		
TCCC05025		5 x 25 Ø5	**7,357**	PZ2	5	400	100	2.400
TCCC05030		5 x 30 Ø5	**7,690**	PZ2	5	400	100	2.400
TCCC05035		5 x 35 Ø5	**8,697**	PZ2	10	400	100	2.400
TCCC05050		5 x 50 Ø5	**9,827**	PZ2	25	200	100	1.200
TCCC06035		6 x 35 Ø6	**9,480**	PZ2	10	400	100	1.200
TCCC06040		6 x 40 Ø6	**9,570**	PZ2	15	400	100	1.200
TCCC06050		6 x 50 Ø6	**11,613**	PZ2	25	200	100	1.200
TCCC06060		6 x 60 Ø6	**13,597**	PZ2	35	200	100	1.200
TCCC06070		6 x 70 Ø6	**16,797**	PZ2	45	200	100	1.200
TCCC06080	NEW	6 x 80 Ø6	**18,293**	PZ 2	55	200	100	1.200
TCCC08060		8 x 60 Ø8	**20,487**	PZ3	20	200	100	600
TCCC08080		8 x 80 Ø8	**25,943**	PZ3	40	200	100	600
TCCC08100		8 x 100 Ø8	**31,720**	PZ3	60	100	100	600
TCCC08120		8 x 120 Ø8	**38,376**	PZ3	80	100	100	400
TCCC08140		8 x 135 Ø8	**48,175**	PZ3	100	100	100	300

Self-Service

CODE	SIZE	€/BAG	PCS.	BAGS
LSTCCC05025	5 x 25 Ø5	**3,380**	30	10
LSTCCC05030	5 x 30 Ø5	**3,562**	30	8
LSTCCC05035	5 x 35 Ø5	**3,794**	30	7
LSTCCC05050	5 x 50 Ø5	**4,264**	30	7
LSTCCC06035	6 x 35 Ø6	**4,233**	30	7
LSTCCC06040	6 x 40 Ø6	**4,283**	30	6
LSTCCC06050	6 x 50 Ø6	**4,407**	25	6
LSTCCC06060	6 x 60 Ø6	**5,075**	25	6
LSTCCC06070	6 x 70 Ø6	**5,545**	25	6
LSTCCC08060	8 x 60 Ø8	**5,503**	20	6
LSTCCC08080	8 x 80 Ø8	**6,888**	20	6

INDEX A PERFECT FIXING

Polyamide 6.6 Hammerfix plug. Preassembled saw-tooth screw

TC

MULTI-MATERIAL

Stone | Hollow brick | Adobe Brick | Solid brick | Aerated concrete | Hollow concrete | Concrete

TC-CA

Countersunk plug



02 P. 379 Technical info



CODE	SIZE	€/100		THICKNESS MAX. FIXTURE	MIN. ORDER QTY.		
TCCA05025	5 x 25 Ø5	**7,357**	PZ2	5	400	100	2.400
TCCA05030	5 x 30 Ø5	**7,690**	PZ2	5	400	100	2.400
TCCA05035	5 x 35 Ø5	**8,697**	PZ2	10	400	100	2.400
TCCA05050	5 x 50 Ø5	**9,827**	PZ2	25	200	100	1.200
TCCA06035	6 x 35 Ø6	**9,480**	PZ2	10	400	100	1.200
TCCA06040	6 x 40 Ø6	**9,570**	PZ2	10	400	100	1.200
TCCA06050	6 x 50 Ø6	**11,613**	PZ2	20	200	100	1.200
TCCA06060	6 x 60 Ø6	**13,597**	PZ2	30	200	100	1.200
TCCA06070	6 x 70 Ø6	**16,797**	PZ2	40	200	100	1.200
TCCA06080	6 x 80 Ø6	**18,293**	PZ2	50	200	100	1.200
TCCA08060	8 x 60 Ø8	**20,487**	PZ3	20	200	100	600
TCCA08080	8 x 80 Ø8	**25,943**	PZ3	40	200	100	600
TCCA08100	8 x 100 Ø8	**31,720**	PZ3	60	100	100	600
TCCA08120	8 x 120 Ø8	**38,376**	PZ3	80	100	100	400
TCCA08140	8 x 135 Ø8	**48,175**	PZ3	100	100	100	300

ALSO AVAILABLE easykits

Blister

CODE	SIZE	€/BAG	PCS.	BAGS
BZTCCA05030	5 x 30 Ø5	**2,565**	4	20
BZTCCA05050	5 x 50 Ø5	**2,565**	4	20
BZTCCA06040	6 x 40 Ø6	**2,565**	4	20
BZTCCA06050	6 x 50 Ø6	**2,565**	4	20
BZTCCA06060	6 x 60 Ø6	**2,565**	4	20
BZTCCA06070	6 x 70 Ø6	**2,565**	4	20
BZTCCA08060	8 x 60 Ø8	**2,565**	4	20
BZTCCA08080	8 x 80 Ø8	**2,565**	4	20
BZTCCA08100	8 x 100 Ø8	**2,565**	2	20
BZTCCA08120	8 x 120 Ø8	**2,565**	2	20

Window Box

CODE	SIZE	€/BOX	PCS.	BOXES
VTCCA05025	5 x 25 Ø5	**3,165**	30	8
VTCCA05030	5 x 30 Ø5	**3,322**	30	8
VTCCA05035	5 x 35 Ø5	**3,662**	30	8
VTCCA05050	5 x 50 Ø5	**4,044**	30	8
VTCCA06035	6 x 35 Ø6	**3,901**	30	8
VTCCA06040	6 x 40 Ø6	**4,002**	30	8
VTCCA06050	6 x 50 Ø6	**4,395**	30	8
VTCCA06060	6 x 60 Ø6	**4,534**	25	8
VTCCA06070	6 x 70 Ø6	**5,599**	25	8
VTCCA08060	8 x 60 Ø8	**5,448**	20	8
VTCCA08080	8 x 80 Ø8	**6,953**	20	8

Self-Service

CODE	SIZE	€/BAG	PCS.	BAGS
LSTCCA05025	5 x 25 Ø5	**3,380**	30	10
LSTCCA05030	5 x 30 Ø5	**3,562**	30	8
LSTCCA05035	5 x 35 Ø5	**3,794**	30	7
LSTCCA05050	5 x 50 Ø5	**4,264**	30	7
LSTCCA06035	6 x 35 Ø6	**4,233**	30	7
LSTCCA06040	6 x 40 Ø6	**4,283**	30	6
LSTCCA06050	6 x 50 Ø6	**4,407**	25	6
LSTCCA06060	6 x 60 Ø6	**5,075**	25	6
LSTCCA06070	6 x 70 Ø6	**5,545**	25	6
LSTCCA08060	8 x 60 Ø8	**5,503**	20	6
LSTCCA08080	8 x 80 Ø8	**6,888**	20	6

MULTI-MATERIAL

Stone | Hollow brick | Adobe Brick | Solid brick | Aerated concrete | Hollow concrete | Concrete

TC-CA EP

Plastic container



CODE	SIZE	€/JAR		THICKNESS MAX. FIXTURE	MIN. ORDER QTY.	PCS X JAR
TCCAEP5030	5 x 30 Ø5	**53,842**	PZ2	5	2 jars	750
TCCAEP6040	6 x 40 Ø6	**45,068**	PZ2	10	2 jars	500



TN4S

The INDEX TN4S expansion plugs offer maximum performance thanks to their 4-way expansion. They stand out for their versatility in installation, being suitable
for application both in solid materials (concrete, solid brick), and in hollow materials (hollow brick, hollow concrete blocks, plasterboard). They can support loads of more than 600 kg per support point. The are manufactured with high-quality Nylon® (polyamide 6).



QUALITIES AND ADVANTAGES



MAXIMUM PERFORMANCE

It expands in 4 directions, guaranteeing perfect adherence to the base material. In hollow materials, when the screw/lag screw is inserted, the plug expands by retracting and pressing on the base material and providing a correct grip.



MULTI-MATERIAL

Recommended for both solid (concrete, stone, solid brick, adobe brick, cellular concrete), and hollow base materials (hollow brick, hollow block, plasterboard, alveolar plates).



VERSATILITY

Recommended for use with a wide range of screws (chipboard screws, countersunk screws, coach screws...), as well as other types of products (hooks or eyes).



EASY TO USE

The collar prevents the plug from slipping into the base material during installation. The plug has several lateral anti-rotation fins that help prevent the plug from turning when inserting the screw/ lag screw.

APPLICATIONS



- Fences
- Railings
- Supports
- Shelving
- Signs
- Sanitary and/or bathroom facilities
- Paintings
- Light elements
- Illumination
- Baseboards
- Mailboxes
- TV cabinets
- Wiring ducts
- Furniture

TN4S

4-way expansion plug for all materials

TN4S

Plug



02 P. 382 Technical info

MULTI-MATERIAL

Plaster-board | Stone | Hollow brick | Adobe Brick | Solid brick | Hollow concrete | Concrete

CODE	SIZE	€/100	SCREW SIZE (Ø | L)	MIN. ORDER QTY.		
TN4S05	5 x 25 Ø5	**3,973**	Ø2,5 - Ø4 | L: 30 mm.	400	100	4.200
TN4S06	6 x 30 Ø6	**4,153**	Ø3,5 - Ø4,5 | L: 40 mm.	400	100	3.200
TN4S08	8 x 40 Ø8	**6,513**	Ø4,5 - Ø6 | L: 50 mm.	400	100	1.600
TN4S10	10 x 50 Ø10	**11,693**	Ø6 - Ø8 | L: 60 mm.	200	50	800
TN4S12	12 x 60 Ø12	**23,660**	Ø8 - Ø10 | L: 70 mm.	50	25	400
TN4S14	14 x 70 Ø14	**30,747**	Ø10 - Ø12 | L: 80 mm.	40	20	320

Blister

CODE	SIZE	€/BAG	PCS.	BAGS
BZTN4S05	5 x 25 Ø5	**2,565**	25	15
BZTN4S06	6 x 30 Ø6	**2,565**	25	15
BZTN4S08	8 x 40 Ø8	**2,565**	15	10
BZTN4S10	10 x 50 Ø10	**2,565**	10	10
BZTN4S12	12 x 60 Ø12	**2,565**	6	10



TN4S EP

Plastic container



MULTI-MATERIAL

Plaster-board | Stone | Hollow brick | Adobe Brick | Solid brick | Hollow concrete | Concrete

CODE	SIZE	€/JAR	MIN. ORDER QTY.	PCS X JAR
TN4S06EP	6 x 30 Ø6	**38,217**	2 jars	1.000
TN4S08EP	8 x 40 Ø8	**30,253**	2 jars	500
TN4S10EP	10 x 50 Ø10	**32,275**	2 jars	300

TN4S

4-way expansion plug for all materials

Kits TN4S + Fixing



BZ TN4S + AL-HA

Blister

CODE	SIZE	€/BAG	PCS.	BAGS
BZALHATS05	5 x25 Ø5 + 19x70 / 4,4x50	2,565	6	20
BZALHATS06	6x30 Ø6 + 20x80 / 5x53	2,565	6	15
BZALHATS08	8x40 Ø8 + 21x100 / 5,6x60	2,565	4	20





BZ TN4S + AL-HC

Blister

CODE	SIZE	€/BAG	PCS.	BAGS
BZALHCTS05	5x25 Ø5 + 19x70 / 4,4x50	2,565	6	20
BZALHCTS06	6x30 Ø6 + 20x80 / 5x53	2,565	6	15
BZALHCTS08	8x40 Ø8 + 21x100 / 5,6x60	2,565	4	20





BZ TN4S + AL-RO

Blister

CODE	SIZE	€/BAG	PCS.	BAGS
BZALROTS05	5x25 Ø5 + 18x50 / 4,1x37	2,565	6	20
BZALROTS06	6x30 Ø6 + 19x60 / 4,4x46	2,565	6	20
BZALROTS08	8x40 Ø8 + 20x80 / 5x63	2,565	4	20





BZ TN4S + DIN-571

Window Box

CODE	SIZE	€/BOX	PCS.	BOXES
VTBTS08	8 x 40 Ø8 & 6 x 60	6,957	25	8
VTBTS10	10 x 50 Ø10 & 7 x 70	7,211	15	8
VTBTS12	12 x 60 Ø12 & 7 x 70	6,937	10	8

Blister

CODE	SIZE	€/BAG	PCS.	BAGS
BZTBTS10	10x50 Ø10 + 7x70	2,565	4	20





BZ TN4S + TP-PO

Window Box

CODE	SIZE	€/BOX	PCS.	BOXES
VTPPOTS05	5 x 25 Ø5 & 4 x 30	4,932	40	8
VTPPOTS06	6 x 30 Ø6 & 4,5 x 40	5,144	32	8
VTPPOTS08	8 x 40 Ø8 & 5 x 60	5,436	20	8

Blister

CODE	SIZE	€/BAG	PCS.	BAGS
BZTPPOTS05	5x25 Ø5 + 4x30	2,565	6	20
BZTPPOTS06	6x30 Ø6 + 4,5x40	2,565	6	20
BZTPPOTS08	8x40 Ø8 + 5x60	2,565	6	15



MULTI-MATERIAL

Plaster-board · Stone · Hollow brick · Adobe Brick · Solid brick · Hollow concrete · Concrete

TN4S-L

Long plug

CODE	SIZE	€/100	SCREW SIZE (Ø | L)		
TN4S06L	6 x 45 Ø6	7,011	Ø3,5 - Ø4,5 | L: 60 mm.	100	1.600
TN4S08L	8 x 60 Ø8	11,172	Ø4,5 - Ø6 | L: 70 mm.	50	800
TN4S10L	10 x 80 Ø10	19,674	Ø6 - Ø8 | L: 90 mm.	25	400



02 P. 382 Technical info

MEDU

Universal plug with collar and knot-like form



02 Technical info P. 382

HOLLOWS



CODE	SIZE	€/100	SUITABLE FOR	MIN. ORDER QTY.		
MEDUB06	6 x 35 Ø6	**3,500**	TPPO 3,5-4	600	150	2.400
MEDUB07	8 x 42 Ø8	**7,130**	TPPO 4-4,5	400	100	1.600
MEDUB08	8 x 50 Ø8	**6,013**	TPPO 4-4,5	320	80	1.200
MEDUB10	10 x 60 Ø10	**9,003**	TPPO 5-6; TB 5,6,7	200	50	800

Blister

CODE	SIZE	€/BAG	PCS.	BAGS
BZMEDUB06	6 x 35 Ø6	**2,565**	10	20
BZMEDUB08	8 x 50 Ø8	**2,565**	10	20
BZMEDUB10	10 x 60 Ø10	**2,565**	6	20

TACON

Nylon plug

Kits TACON + Fixing

BZ TACON + AL-HA



CODE	SIZE	€/BAG	PCS.	BAGS
BZALHAT04	4x20 Ø4 + 16x30 / 3,1x25	**2,029**	6	20
BZALHAT05	5x25 Ø5 + 19x70 / 4,4x50	**2,029**	6	20
BZALHAT06	6x30 Ø6 + 20x80 / 5x55	**2,029**	6	15
BZALHAT08	8x40 Ø8 + 21x100 / 5,6x60	**2,029**	4	15

BZ TACON + AL-HC



CODE	SIZE	€/BAG	PCS.	BAGS
BZALHCT04	4x20 Ø4 + 16x30 / 3,1x25	**2,029**	6	20
BZALHCT05	5x25 Ø5 + 19x70 / 4,4x50	**2,029**	6	20
BZALHCT06	6x30 Ø6 + 20x80 / 5x55	**2,029**	6	15
BZALHCT08	8x40 Ø8 + 21x100 / 5,6x60	**2,029**	4	15

BZ TACON + AL-RO



CODE	SIZE	€/BAG	PCS.	BAGS
BZALROT04	4x20 Ø4 + 16x30 / 3,1x20	**2,029**	6	20
BZALROT05	5x25 Ø5 + 17x40 / 3,5x29	**2,029**	6	20
BZALROT06	6x30 Ø6 + 19x60 / 4,4x46	**2,029**	6	20
BZALROT08	8x40 Ø8 + 20x80 / 5x63	**2,029**	4	15

BZ TACON + TP-PO



CODE	SIZE	€/BAG	PCS.	BAGS
BZTPPOT04	4x20 Ø4 + 2,5x25	**2,029**	6	20
BZTPPOT05	6x30 Ø5 + 3,5x20	**2,029**	6	20
BZTPPOT06	6x30 Ø6 + 4,5x40	**2,029**	6	20
BZTPPOT08	8x40 Ø8 + 6x50	**2,029**	4	15

AVAILABLE KITS BLISTER



TACON

Nylon plug

MULTI-MATERIAL

Stone · Hollow brick · Adobe Brick · Solid brick · Aerated concrete · Hollow concrete · Concrete

CODE	SIZE	€/100	SCREW SIZE (mm)	MIN. ORDER QTY.		
TACON04	4 x 20 Ø4	**2,543**	TPPO 2,5-3	400	100	8.000
TACON05	5 x 25 Ø5	**1,837**	TPPO 2,5-4	400	100	8.000
TACON06	6 x 30 Ø6	**1,883**	TPPO 3,5-4	400	100	9.000
TACON07	7 x 30 Ø7	**3,933**	TPPO 4-4,5	400	100	5.000
TACON08	8 x 40 Ø8	**3,710**	TPPO 4,5 , TB 5-6	400	100	5.000
TACON10	10 x 50 Ø10	**6,253**	TB 6-8	200	50	2.500
TACON12	12 x 60 Ø12	**11,460**	TB 8-10	100	25	1.250
TACON14	14 x 70 Ø14	**18,527**	TB 10-12	80	20	1.000
TACON16	16 x 80 Ø16	**105,017**	TB 12-14	40	10	500

Blister

CODE	SIZE	€/BAG	PCS.	BAGS
BZTACON04	4 x 20 Ø4	**2,029**	25	15
BZTACON05	5 x 25 Ø5	**2,029**	25	15
BZTACON06	6 x 30 Ø6	**2,029**	25	15
BZTACON08	8 x 40 Ø8	**2,029**	15	10
BZTACON10	10 x 50 Ø10	**2,029**	10	10
BZTACON12	12 x 60 Ø12	**2,029**	5	10

TACON

Plug



02 P. 382 Technical info

TACOL

Nylon plug

MULTI-MATERIAL

Stone · Hollow brick · Adobe Brick · Solid brick · Aerated concrete · Hollow concrete · Concrete

CODE	SIZE	€/100	SCREW SIZE (mm)	MIN. ORDER QTY.		
TACOL05	5 x 25 Ø5	**2,613**	TPPO 2,5-4	400	100	8.000
TACOL06	6 x 30 Ø6	**2,233**	TPPO 3,5-4	400	100	9.000
TACOL08	8 x 40 Ø8	**4,387**	TPPO 4,5 , TB 5-6	400	100	5.000
TACOL10	10 x 50 Ø10	**7,880**	TB 6-8	200	50	2.500
TACOL12	12 x 60 Ø12	**17,117**	TB 8-10	100	25	1.250

TACOL

Plug with collar



02 P. 382 Technical info

TACOL-A

Nylon plug

MULTI-MATERIAL

Stone · Hollow brick · Adobe Brick · Solid brick · Aerated concrete · Hollow concrete · Concrete

CODE	SIZE	€/100	SCREW SIZE		
TACOLA06	6 x 30 Ø6	**2,590**	TPPO 3,5-4	100	2.400

TACOL-A

Plug with wide collar



02 P. 383 Technical info

IPA

Nylon plug in hollow bricks or solid materials

IPA-GR

Corner hook



02 P. 383 Technical info

MULTI-MATERIAL — Plaster-board, Stone, Hollow brick, Adobe Brick, Solid brick, Aerated concrete, Hollow concrete, Concrete

CODE	SIZE	€/100	WASHER Ø	MIN. ORDER QTY.		
IPAGR09	M4 x 40 Ø9	**41,260**	20	100	50	800
IPAGR12	M5 x 45 Ø12	**58,197**	25	50	25	400

IPA-GN

Hook



02 P. 383 Technical info

MULTI-MATERIAL — Plaster-board, Stone, Hollow brick, Adobe Brick, Solid brick, Aerated concrete, Hollow concrete, Concrete

CODE	SIZE	€/100	WASHER Ø	MIN. ORDER QTY.		
IPAGN09	M4 x 40 Ø9	**48,233**	20	80	40	640
IPAGN12	M5 x 45 Ø12	**66,083**	25	40	20	320

IPA-AR

Eye bolt



02 P. 383 Technical info

MULTI-MATERIAL — Plaster-board, Stone, Hollow brick, Adobe Brick, Solid brick, Aerated concrete, Hollow concrete, Concrete

CODE	SIZE	€/100	WASHER Ø	MIN. ORDER QTY.		
IPAAR09	M4 x 40 Ø9	**48,133**	20	80	40	640
IPAAR12	M5 x 45 Ø12	**65,827**	25	40	20	320

IPA-TO

Screw



02 P. 383 Technical info

MULTI-MATERIAL — Plaster-board, Stone, Hollow brick, Adobe Brick, Solid brick, Aerated concrete, Hollow concrete, Concrete

CODE	SIZE	€/100	WASHER Ø	MIN. ORDER QTY.		
IPATO09	M4 x 40 Ø9	**37,793**	20	140	70	1.120
IPATO12	M5 x 45 Ø12	**51,743**	25	70	35	560

TA-PL

Plastic plug (polypropylene)

02 P. 383 Technical info

MULTI-MATERIAL — Stone, Hollow brick, Adobe Brick, Solid brick, Aerated concrete, Hollow concrete, Concrete

CODE	SIZE	€/100	MIN. ORDER QTY.		
TACOP05	5 x 21 Ø5	**1,943**	1.000	25	1.000
TACOP06	6 x 22 Ø6	**2,183**	1.000	25	1.000
TACOP07	7 x 23 Ø7	**2,407**	1.000	25	1.000
TACOP08	8 x 27 Ø8	**2,607**	1.000	25	1.000
TACOP09	9 x 30 Ø9	**3,670**	1.000	25	1.000
TACOP10	10 x 35 Ø10	**4,697**	1.000	25	1.000
TACOP11	10 x 43 Ø10	**7,237**	500	25	500
TACOP12	12 x 45 Ø12	**7,247**	500	25	500
TACOP14	14 x 48 Ø14	**9,863**	500	25	500



FIXINGS AND ACCESSORIES FOR THERMAL INSULATION SYSTEMS (ETICS)

AIS

Fixing plug for insulation panels

AIS-C

Plug with polyamide nail

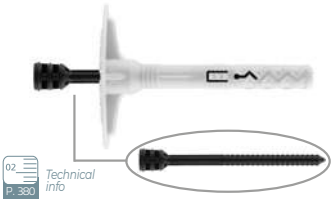

02 P. 380 Technical info

MULTI-MATERIAL



CODE		SIZE	€/100	THICKNESS MAX. FIXTURE	WASHER Ø	
AISC10070		10 x 70 Ø10	**23,954**	10-20	52	200
AISC10090		10 x 90 Ø10	**25,855**	30-40	52	200
AISC10100	NEW	10 x 100 Ø10	**26,817**	40-50	52	200
•AISC10110		10 x 110 Ø10	**30,365**	50-60	52	100
AISC10120	NEW	10 x 120 Ø10	**30,438**	60-70	52	200
•AISC10130		10 x 130 Ø10	**33,666**	70-80	52	100
AISC10140	NEW	10 x 140 Ø10	**34,171**	80-90	52	200
AISC10160	NEW	10 x 160 Ø10	**36,961**	100-110	52	200
AISC10180	NEW	10 x 180 Ø10	**41,583**	120-130	52	200
AISC10200	NEW	10 x 200 Ø10	**54,948**	140-150	52	200
AISC10220	NEW	10 x 220 Ø10	**59,280**	150-170	52	200
AISC10260	NEW	10 x 260 Ø10	**66,595**	200-210	52	100

• Non-assessed sizes
• Availability: end of stock

NEW AIS-S

Plug with metalic nail and polyamide cap

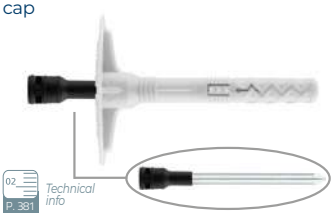

02 P. 381 Technical info

MULTI-MATERIAL



CODE	SIZE	€/100	THICKNESS MAX. FIXTURE		
AISS10070	10 x 70 Ø10	**52,698**	10-20	200	-
AISS10090	10 x 90 Ø10	**59,467**	30-40	200	-
AISS10100	10 x 100 Ø10	**64,361**	40-50	200	-
AISS10120	10 x 120 Ø10	**73,051**	60-70	200	-
AISS10140	10 x 140 Ø10	**82,011**	80-90	200	-
AISS10160	10 x 160 Ø10	**88,707**	100-110	200	-
AISS10180	10 x 180 Ø10	**95,641**	120-130	200	-
AISS10200	10 x 200 Ø10	**109,896**	140-150	200	-
AISS10220	10 x 220 Ø10	**118,560**	150-170	200	-
AISS10260	10 x 260 Ø10	**133,190**	200-210	100	-

AIS

Plug

02 P. 381 Technical info

MULTI-MATERIAL



CODE	SIZE	€/100	THICKNESS MAX. FIXTURE	WASHER Ø		
AIS08080	8 x 80 Ø8	**21,190**	20 - 50	35	100	200
AIS08100	8 x 100 Ø8	**24,370**	50 - 70	35	100	-
AIS08120	8 x 120 Ø8	**27,043**	70 - 90	35	100	-
AIS08140	8 x 140 Ø8	**27,690**	90 - 110	35	100	-

NEW AIS-R

Support washer

02 P. 381 Technical info

MULTI-MATERIAL



CODE	SIZE	€/100		
AISR140	Ø140	**41,800**	200	-

Fixing plug for insulation panels — AIS

MULTI-MATERIAL

High-density ETIS

POLYPROPYLENE

CODE	SIZE	€/100		
AISW060	Ø60	**21,200**	500	-

AIS-W NEW

Washer for use with screw

02 P. 381 Technical info

MULTI-MATERIAL

High-density ETIS

Concrete

ZINC

CODE	SIZE	€/100	THICKNESS MAX. FIXTURE		
AISM08090	8 x 90 Ø8	**33,600**	50	250	-
AISM08110	8 x 110 Ø8	**39,500**	70	250	-
AISM08120	8 x 120 Ø8	**40,800**	80	250	-
AISM08140	8 x 140 Ø8	**45,800**	100	250	-
AISM08170	8 x 170 Ø8	**54,900**	130	250	-
AISM08200	8 x 200 Ø8	**70,900**	160	250	-
AISM08250	8 x 250 Ø8	**83,200**	210	250	-
AISM08300	8 x 300 Ø8	**136,400**	260	250	-

AIS-M NEW

Metallic fixing plug



02 P. 381 Technical info

MULTI-MATERIAL

Low-density ETIS

ZINC

CODE	SIZE	€/100		
AISAM085	Ø85	**102,700**	250	-

AIS-AM NEW

Whaser for metallic fixing plug



02 P. 381 Technical info

Spiral anchor — TE NEW

MULTI-MATERIAL

High-density ETIS

NYLON

CODE	SIZE	€/100		
TE25050	25 x 50	**80,700**	50	600
TE25090	25 x 90	**137,200**	25	300

02 P. 381 Technical info



FIXINGS FOR HOLLOW MATERIALS

BA-NO

Gravity toggle for fixing lightweight in ceilings

BA-ES

Projecting bolt

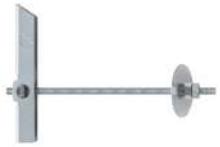

02 P. 384 Technical info

PATENTED

ALSO AVAILABLE easykits

HOLLOWS: Plaster-board, Hollow concrete

CODE	SIZE	€/100	MIN. ORDER QTY.		
BAESM04	M4 Ø14	**61,907**	100	50	300
BAESM05	M5 Ø14	**68,050**	100	50	300
BAESM06	M6 Ø16	**88,513**	100	50	200
BAESM08	M8 Ø20	**145,577**	50	50	200

Blister

CODE	SIZE	€/BAG	PCS.	BAGS
BZBAESM04	M4 Ø14	**3,427**	2	12
BZBAESM05	M5 Ø14	**3,427**	2	12
BZBAESM06	M6 Ø16	**3,427**	2	10

Window Box

CODE	SIZE	€/BOX	PCS.	BOXES
VBAESM04	M4 Ø14	**5,559**	6	8
VBAESM05	M5 Ø14	**5,722**	6	8
VBAESM06	M6 Ø16	**4,968**	4	8

Self-Service

CODE	SIZE	€/BAG	PCS.	BAGS
LSBAESM04	M4 Ø14	**5,506**	6	6
LSBAESM05	M5 Ø14	**5,668**	6	6
LSBAESM06	M6 Ø16	**4,921**	4	6

BA-GA

Hook



02 P. 384 Technical info

PATENTED

ALSO AVAILABLE easykits

HOLLOWS: Plaster-board, Hollow concrete

CODE	SIZE	€/100	MIN. ORDER QTY.		
BAGAM04	M4 Ø14	**64,387**	100	50	300
BAGAM05	M5 Ø14	**72,307**	100	50	300
BAGAM06	M6 Ø16	**90,360**	100	50	200
BAGAM08	M8 Ø20	**151,143**	50	50	150

Blister

CODE	SIZE	€/BAG	PCS.	BAGS
BZBAGAM04	M4 Ø14	**3,427**	2	12
BZBAGAM05	M5 Ø14	**3,427**	2	12
BZBAGAM06	M6 Ø16	**3,427**	2	10

Window Box

CODE	SIZE	€/BOX	PCS.	BOXES
VBAGAM04	M4 Ø14	**5,597**	6	8
VBAGAM05	M5 Ø14	**6,028**	6	8
VBAGAM06	M6 Ø16	**5,048**	4	8

Self-Service

CODE	SIZE	€/BAG	PCS.	BAGS
LSBAGAM04	M4 Ø14	**5,544**	6	6
LSBAGAM05	M5 Ø14	**5,971**	6	6
LSBAGAM06	M6 Ø16	**5,000**	4	6

CA-BA

Toggle head



PATENTED

ALSO AVAILABLE easykits

HOLLOWS: Plaster-board, Hollow concrete

CODE	SIZE	€/100		
CABA004	M4 Ø14	**31,917**	100	1.200
CABA005	M5 Ø14	**34,940**	100	1.200
CABA006	M6 Ø16	**40,743**	100	600
CABA008	M8 Ø20	**70,840**	100	400

Window Box

CODE	SIZE	€/BOX	PCS.	BOXES
VCABA004	M4 Ø14	**8,508**	20	8
VCABA005	M5 Ø14	**9,496**	20	8
VCABA006	M6 Ø16	**8,185**	15	8

Self-Service

CODE	SIZE	€/BAG	PCS.	BAGS
LSCABA004	M4 Ø14	**8,717**	20	6
LSCABA005	M5 Ø14	**9,400**	20	6
LSCABA006	M6 Ø16	**8,227**	15	7

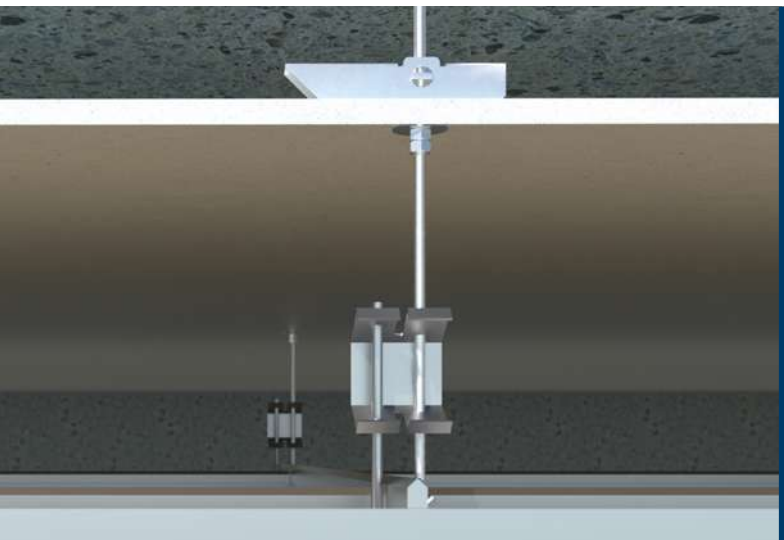



Spring toggle

PA-LO

PA-ES

Projecting bolt



02 P. 384 Technical info

HOLLOWS — Plaster · Plaster-board · Hollow concrete — kg. — ZINC

CODE	SIZE	€/100	MIN. ORDER QTY.		
PAESM04	M4 Ø12	**48,760**	100	50	300
PAESM05	M5 Ø15	**54,017**	100	50	300
PAESM06	M6 Ø18	**67,360**	100	50	200
PAESM08	M8 Ø22	**119,903**	50	50	150

Blister

CODE	SIZE	€/BAG	PCS.	BAGS
BZPAESM04	M4 Ø12	**3,427**	2	12
BZPAESM05	M5 Ø15	**3,427**	2	12
BZPAESM06	M6 Ø18	**3,427**	2	10

Window Box

CODE	SIZE	€/BOX	PCS.	BOXES
VPAESM04	M4 Ø12	**4,425**	6	8
VPAESM05	M5 Ø15	**5,005**	6	8
VPAESM06	M6 Ø18	**4,239**	4	8

Self-Service

CODE	SIZE	€/BAG	PCS.	BAGS
LSPAESM04	M4 Ø12	**4,346**	6	6
LSPAESM05	M5 Ø15	**4,957**	6	6
LSPAESM06	M6 Ø18	**4,160**	4	6

PA-GA

Hook



02 P. 384 Technical info

HOLLOWS — Plaster · Plaster-board · Hollow concrete — kg. — ZINC

CODE	SIZE	€/100	MIN. ORDER QTY.		
PAGAM04	M4 Ø12	**49,717**	100	50	300
PAGAM05	M5 Ø15	**56,770**	100	50	300
PAGAM06	M6 Ø18	**79,777**	100	50	200
PAGAM08	M8 Ø22	**133,940**	50	50	150

Blister

CODE	SIZE	€/BAG	PCS.	BAGS
BZPAGAM04	M4 Ø12	**3,427**	2	12
BZPAGAM05	M5 Ø15	**3,427**	2	12
BZPAGAM06	M6 Ø18	**3,427**	2	10

Window Box

CODE	SIZE	€/BOX	PCS.	BOXES
VPAGAM04	M4 Ø12	**4,267**	6	8
VPAGAM05	M5 Ø15	**4,964**	6	8
VPAGAM06	M6 Ø18	**4,465**	4	8

Self-Service

CODE	SIZE	€/BAG	PCS.	BAGS
LSPAGAM04	M4 Ø12	**4,561**	6	6
LSPAGAM05	M5 Ø15	**5,187**	6	6
LSPAGAM06	M6 Ø18	**4,877**	4	6

CA-PA

Spring toggle head



HOLLOWS — Plaster · Plaster-board · Hollow concrete — kg. — ZINC

CODE	SIZE	€/100		
CAPA004	M4 Ø12	**19,060**	100	2.400
CAPA005	M5 Ø15	**22,077**	100	1.200
CAPA006	M6 Ø18	**25,997**	100	600
CAPA008	M8 Ø22	**58,417**	100	400

Window Box

CODE	SIZE	€/BOX	PCS.	BOXES
VCAPA004	M4 Ø12	**6,591**	24	8
VCAPA005	M5 Ø15	**6,496**	20	8
VCAPA006	M6 Ø18	**5,964**	15	8

Self-Service

CODE	SIZE	€/BAG	PCS.	BAGS
LSCAPA004	M4 Ø12	**6,591**	24	8
LSCAPA005	M5 Ø15	**6,496**	20	7
LSCAPA006	M6 Ø18	**5,734**	15	7

IN

Indemoll anchor for hollow elements fixing

IN-CO

With panhead screw



02 P. 384 Technical info

HOLLOWS — Hollow brick, Hollow concrete, Plaster-board — kg. — ZINC

CODE	SIZE	€/100	MIN. SUBSTRATE THICKNESS		
INCO421	M4 x 30 Ø 8	**28,920**	1-5	100	2.400
INCO432	M4 x 41 Ø 8	**29,387**	3-10	100	1.200
INCO438	M4 x 47 Ø 8	**31,923**	9-16	100	1.200
INCO446	M4 x 53 Ø 8	**34,727**	15-22	100	1.200
INCO459	M4 x 67 Ø 8	**39,193**	31-36	100	1.200
INCO537	M5 x 46 Ø 10	**40,333**	5-14	100	1.200
INCO552	M5 x 59 Ø 10	**43,247**	6-18	100	600
INCO565	M5 x 72 Ø 10	**51,343**	16-33	100	600
INCO580	M5 x 89 Ø 10	**57,573**	33-46	100	600
INCO637	M6 x 46 Ø 12	**45,987**	5-13	100	1.200
INCO652	M6 x 59 Ø 12	**53,417**	6-17	100	600
INCO665	M6 x 72 Ø 12	**59,530**	14-32	100	600
INCO680	M6 x 89 Ø 12	**78,173**	34-46	100	600

Blister

CODE	SIZE	€/BAG	PCS.	BAGS
BZINCO432	M4 x 41 Ø 8	**2,565**	2	20
BZINCO438	M4 x 47 Ø 8	**2,565**	2	20
BZINCO537	M5 x 46 Ø 10	**2,565**	2	20
BZINCO552	M5 x 59 Ø 10	**2,565**	2	15
BZINCO565	M5 x 72 Ø 10	**2,565**	2	15
BZINCO637	M6 x 46 Ø 12	**2,565**	2	15
BZINCO652	M6 x 59 Ø 12	**2,565**	2	15

Window Box

CODE	SIZE	€/BOX	PCS.	BOXES
VINCO432	M4 x 41 Ø 8	**5,300**	15	8
VINCO438	M4 x 47 Ø 8	**5,730**	15	8
VINCO446	M5 x 46 Ø 10	**6,276**	15	8
VINCO537	M5 x 59 Ø 10	**7,289**	15	8
VINCO552	M5 x 72 Ø 10	**6,253**	12	8
VINCO637	M6 x 46 Ø 12	**5,509**	10	8
VINCO652	M6 x 59 Ø 12	**6,407**	10	8

Self-Service

CODE	SIZE	€/BAG	PCS.	BAGS
LSINCO432	M4 x 41 Ø 8	**9,559**	30	6
LSINCO438	M4 x 47 Ø 8	**10,382**	30	6
LSINCO446	M5 x 46 Ø 10	**11,295**	30	6
LSINCO537	M5 x 59 Ø 10	**10,932**	25	6
LSINCO552	M5 x 72 Ø 10	**8,437**	18	7
LSINCO637	M6 x 46 Ø 12	**9,971**	20	7
LSINCO652	M6 x 59 Ø 12	**8,688**	15	7

IN-HE

With hexagonal screw



02 P. 385 Technical info

HOLLOWS — Hollow brick, Hollow concrete, Plaster-board — kg. — ZINC

CODE	SIZE	€/100	MAX. JOINT THICKNESS BASE MATERIAL AND ELEMENT TO BE FIXED ≤		
INHE837	M8 x 45 Ø 14	**104,170**	5-13	100	600
INHE855	M8 x 60 Ø 14	**119,827**	5-16	100	400
INHE865	M8 x 73 Ø 14	**142,673**	16-32	100	400

IN-SI

Without screw



HOLLOWS — Hollow brick, Hollow concrete, Plaster-board — kg. — ZINC

CODE	SIZE	€/100	MIN. SUBSTRATE THICKNESS		
INSI421	M4 x 21 Ø 8	**22,190**	1-5	100	2.400
INSI432	M4 x 32 Ø 8	**24,153**	3-10	100	2.400
INSI438	M4 x 38 Ø 8	**26,260**	9-16	100	2.400
INSI537	M5 x 37 Ø 10	**31,000**	5-14	100	1.200
INSI552	M5 x 52 Ø 10	**36,347**	6-18	100	600
INSI565	M5 x 65 Ø 10	**40,310**	16-33	100	600
INSI637	M6 x 37 Ø 12	**37,573**	5-13	100	1.200
INSI652	M6 x 52 Ø 12	**45,890**	6-17	100	600
INSI665	M6 x 65 Ø 12	**51,410**	14-32	100	600
INSI865	M8 x 65 Ø 14	**89,313**	17-33	100	400

Indemoll anchor for hollow elements fixing

IN

HOLLOWS

Plaster-board | Hollow brick | Hollow concrete

CODE	SIZE	€/100		
INPINZANI	M4, M5 & M6	**1.311,566**	1	20

INPIN

Pliers



HOLLOWS

Plaster-board | Hollow brick | Hollow concrete

CODE	SIZE	€/100		
INPISANIN	M4, M5, M6 & M8	**3.212,286**	1	10

INPIS

Gun



HOLLOWS

Hollow brick | Hollow concrete | Plaster-board

kg. | ZINC

CODE	CONTENT	SIZE CONTENT	PCS X KIT	€/KIT	KITS X
KITINPIN01	INPINZANI	44,266	1	**44,266**	1
	INCO432	M4 x 41 Ø 8	20		
	INCO537	M5 x 46 Ø 10	20		

KITINPIN

Gun



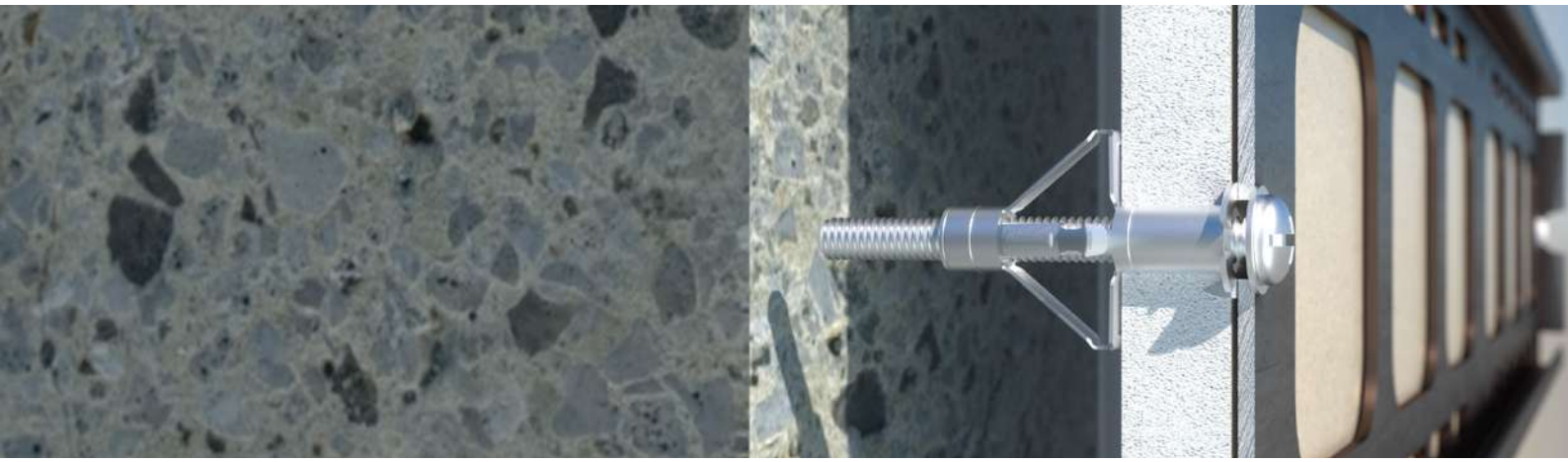

ANCLA

Nylon plug for hollow bricks and plasterboard



02 P. 385 Technical info

HOLLOWS

Plaster-board | Hollow brick | Hollow concrete

kg.

Ny NYLON

CODE	SIZE	€/100	MIN. SUBSTRATE THICKNESS	MIN. ORDER QTY.		
ANCLA40	10 x 40 Ø10	**11,443**	4-12	200	100	600
ANCLA47	10 x 47 Ø10	**13,367**	15-19	200	100	600

Blister

CODE	SIZE	€/BAG	PCS.	BAGS
BZANCLA40	10 x 40 Ø10	**2,565**	4	12
BZANCLA47	10 x 47 Ø10	**2,565**	4	12

* Recommended to use for screw TPPO 4,0

TAPLA

Plugs for plasterboard

TAPLA NY

Nylon plug



02 P. 385 Technical info

HOLLOWS

Plaster-board

kg.

Ny NYLON

CODE	SIZE	€/100		MIN. SUBSTRATE THICKNESS	SCREW SIZE	MIN. ORDER QTY.		
TAPLANY	15 x 33	**12,200**	PH3	9-16	TPPO 4,5 x 40 DIN 7981 4,2 x 38	200	100	1.600

Blister

CODE	SIZE	€/BAG	PCS.	BAGS
BZTAPLANY	15 x 33	**2,565**	4	15

TAPLA ME

Zamak plug with DIN 7981 4,2 x 32



02 P. 385 Technical info

HOLLOWS

Plaster-board

kg.

Zk ZAMAK

CODE	SIZE	€/100		MIN. SUBSTRATE THICKNESS	SCREW SIZE	MIN. ORDER QTY.		
TAPLAME	13 x 32	**29,890**	PH2/PH3	9-16	DIN 7981 4,2 x 32	200	100	1.600

Blister

CODE	SIZE	€/BAG	PCS.	BAGS
BZTAPLAME	13 x 32	**3,427**	4	15

TAPLA ZK

Zamak plug



02 P. 385 Technical info

HOLLOWS

Plaster-board

kg.

Zk ZAMAK

CODE	SIZE	€/100		MIN. SUBSTRATE THICKNESS	SCREW SIZE	MIN. ORDER QTY.		
TAPLAZK	13 x 37	**31,700**	PZ3	9-16	TPPO 4,5 x 50 DIN 7981 4,2 x 38	200	100	1.600

INDEX A PERFECT FIXING



RIVETS

RE Rivets

RE-NO

Panhead. Aluminium



METAL


Metal sheet


Metal sheet - heavy profiles


Aluminium frames

AL

CODE	SIZE	€/100	DRILL Ø	THICKNESS MAX. FIXTURE		
RENO3206	3,2 x 6	**3,830**	3,3	1 – 3	500	12.000
RENO3208	3,2 x 8	**4,070**	3,3	3 – 5	500	12.000
RENO3210	3,2 x 10	**4,490**	3,3	5 – 7	500	6.000
RENO3212	3,2 x 12	**4,817**	3,3	7 – 9	500	6.000
RENO3214	3,2 x 14	**5,230**	3,3	9 – 11	500	6.000
RENO3216	3,2 x 16	**5,793**	3,3	11 – 13	500	6.000
RENO3218	3,2 x 18	**6,697**	3,3	13 – 15	500	6.000
RENO4006	4 x 6	**4,243**	4,1	0,5 – 2	500	6.000
RENO4008	4 x 8	**4,570**	4,1	2 – 4	500	6.000
RENO4010	4 x 10	**5,277**	4,1	4 – 6	500	6.000
RENO4012	4 x 12	**5,767**	4,1	6 – 8	500	6.000
RENO4014	4 x 14	**6,510**	4,1	8 – 10	500	6.000
RENO4016	4 x 16	**6,797**	4,1	10 – 12	500	6.000
RENO4018	4 x 18	**7,263**	4,1	12 – 14	500	3.000
RENO4020	4 x 20	**7,503**	4,1	14 – 16	500	6.000
RENO4025	4 x 25	**9,770**	4,1	16 – 18	250	3.000
RENO4030	4 x 30	**11,370**	4,1	23 – 16	250	3.000
RENO4035	4 x 35	**14,253**	4,1	26 – 30	250	3.000
RENO4806	4,8 x 6	**5,567**	5	0,5 – 1,5	500	6.000
RENO4808	4,8 x 8	**6,560**	5	1,5 – 3,5	500	6.000
RENO4810	4,8 x 10	**6,893**	5	3,5 – 5,5	500	3.000
RENO4812	4,8 x 12	**7,263**	5	5,5 – 7,5	500	3.000
RENO4814	4,8 x 14	**8,313**	5	7,5 – 9,5	250	3.000
RENO4816	4,8 x 16	**9,020**	5	9,5 – 11,5	250	3.000
RENO4818	4,8 x 18	**10,293**	5	11,5 – 13,5	250	3.000
RENO4820	4,8 x 20	**11,083**	5	13,5 – 15	250	3.000
RENO4822	4,8 x 22	**12,170**	5	15 – 17	200	2.400
RENO4824	4,8 x 24	**12,360**	5	17 – 19	200	2.400
RENO4826	4,8 x 26	**13,270**	5	19 – 21	200	2.400
RENO4828	4,8 x 28	**14,113**	5	21 – 23	200	2.400
RENO4830	4,8 x 30	**14,903**	5	23 – 25	200	2.400
RENO4835	4,8 x 35	**16,383**	5	25 – 30	150	1.800
RENO6008	6 x 8	**15,333**	6,1	1 – 2	250	3.000
RENO6010	6 x 10	**14,440**	6,1	2 – 4	250	3.000
RENO6012	6 x 12	**14,823**	6,1	3 – 6	250	3.000
RENO6018	6 x 18	**16,887**	6,1	6 – 10	200	1.200
RENO6025	6 x 25	**20,807**	6,1	10 – 12	200	1.200
RENO6016	6 x 16	**16,240**	6,1	15 – 19	250	1.500

Blister

CODE	SIZE	€/BAG	PCS.	BAGS
BZRENO3208	3,2 x 8	**2,029**	15	20
BZRENO3210	3,2 x 10	**2,029**	15	20
BZRENO4008	4 x 8	**2,029**	15	20
BZRENO4010	4 x 10	**2,029**	15	20
BZRENO4012	4 x 12	**2,029**	15	20
BZRENO4016	4 x 16	**2,029**	15	20
BZRENO4810	4,8 x 10	**2,029**	15	20
BZRENO4812	4,8 x 12	**2,029**	15	20
BZRENO4816	4,8 x 16	**2,029**	8	20
BZRENO4820	4,8 x 20	**2,029**	8	20
BZRENO4824	4,8 x 24	**2,029**	8	20

Window Box

CODE	SIZE	€/BOX	PCS.	BOXES
VRENO3206	3,2 x 6	**2,689**	50	8
VRENO3208	3,2 x 8	**2,671**	50	8
VRENO3210	3,2 x 10	**2,950**	50	8
VRENO3212	3,2 x 12	**3,316**	50	8
VRENO3214	3,2 x 14	**3,439**	50	8
VRENO3218	3,2 x 18	**4,354**	50	8
VRENO4006	4 x 6	**2,957**	50	8
VRENO4008	4 x 8	**2,972**	50	8
VRENO4010	4 x 10	**3,439**	50	8
VRENO4012	4 x 12	**3,751**	50	8
VRENO4014	4 x 14	**4,240**	50	8
VRENO4016	4 x 16	**4,422**	50	8
VRENO4018	4 x 18	**4,724**	50	8
VRENO4020	4 x 20	**4,880**	50	8
VRENO4808	4,8 x 8	**4,354**	50	8
VRENO4810	4,8 x 10	**4,484**	50	8
VRENO4812	4,8 x 12	**4,724**	50	8
VRENO4814	4,8 x 14	**5,407**	50	8
VRENO4816	4,8 x 16	**5,865**	50	8
VRENO4818	4,8 x 18	**6,693**	50	8
VRENO4820	4,8 x 20	**7,212**	50	8
VRENO4822	4,8 x 22	**3,961**	25	8
VRENO4824	4,8 x 24	**4,022**	25	8
VRENO4830	4,8 x 30	**4,851**	25	8
VRENO4835	4,8 x 35	**5,331**	25	8

INDEX A PERFECT FIXING

Rivets RE

METAL — Metal sheet · Metal sheet - heavy profiles · Aluminium frames · A2 INOX

RE-IN

Panhead. A2 Stainless steel



CODE	SIZE	€/100	DRILL Ø	THICKNESS MAX. FIXTURE		
REIN3206	3,2 x 6,4	**19,440**	3,3	0,5 – 3	500	6.000
REIN3208	3,2 x 8	**20,797**	3,3	3 – 5	500	6.000
REIN3212	3,2 x 12,7	**30,647**	3,3	6,5 – 8,5	500	6.000
REIN3215	3,2 x 15,9	**37,027**	3,3	10,5 – 12,5	500	6.000
REIN4008	4 x 8,5	**34,910**	4,1	2,5 – 4,5	500	6.000
REIN4010	4 x 10,2	**37,150**	4,1	4,5 – 6,5	500	6.000
REIN4012	4 x 12	**42,103**	4,1	6,5 – 8,5	500	6.000
REIN4016	4 x 16	**50,977**	4,1	10 – 12	500	3.000
REIN4810	4,8 x 10,8	**51,360**	5	4 – 6	500	3.000
REIN4812	4,8 x 12	**56,140**	5	6 – 8	500	3.000
REIN4816	4,8 x 16	**69,020**	5	8 – 11	250	3.000
REIN4820	4,8 x 20,3	**96,840**	5	11 – 13	250	3.000
REIN4818	4,8 x 18	**73,797**	5	13 – 15	250	3.000

METAL — Metal sheet · Metal sheet - heavy profiles · Aluminium frames · AL

RE-CA

Wide head. Aluminium



CODE	SIZE	€/100	DRILL Ø	THICKNESS MAX. FIXTURE		
RECA4008	4 x 8	**6,930**	4,1	2 - 4	500	3.000
RECA4010	4 x 10	**7,510**	4,1	4 - 6	500	3.000
RECA4012	4 x 12	**8,853**	4,1	6 - 8	250	3.000
RECA4016	4 x 16	**10,117**	4,1	10 - 12	250	3.000
RECA4810	4,8 x 10	**11,367**	5	3,5 - 5,5	250	3.000
RECA4812	4,8 x 12	**11,930**	5	5,5 - 7,5	250	3.000
RECA4814	4,8 x 14	**12,953**	5	7,5 - 9,5	250	3.000
RECA4816	4,8 x 16	**13,577**	5	9,5 - 11,5	250	1.500
RECA4818	4,8 x 18	**14,773**	5	11,5 - 13,5	200	2.400

Blister

CODE	SIZE	€/BAG	PCS.	BAGS
BZRECA4010	4 x 10	**2,029**	8	15
BZRECA4012	4 x 12	**2,029**	8	15
BZRECA4016	4 x 16	**2,029**	8	15
BZRECA4810	4,8 x 10	**2,029**	8	15
BZRECA4812	4,8 x 12	**2,029**	8	15
BZRECA4814	4,8 x 14	**2,029**	8	15
BZRECA4816	4,8 x 16	**2,029**	8	15
BZRECA4818	4,8 x 18	**2,029**	5	15

Window Box

CODE	SIZE	€/BOX	PCS.	BOXES
VRECA4010	4 x 10	**4,793**	50	8
VRECA4012	4 x 12	**4,083**	35	8
VRECA4016	4 x 16	**4,575**	35	8
VRECA4810	4,8 x 10	**3,751**	25	8
VRECA4812	4,8 x 12	**3,774**	25	8
VRECA4814	4,8 x 14	**4,278**	25	8
VRECA4816	4,8 x 16	**4,469**	25	8
VRECA4818	4,8 x 18	**3,892**	20	8

METAL — Metal sheet · Metal sheet - heavy profiles · Aluminium frames · AL

RE-BL

White panhead. Aluminium



CODE	SIZE	€/100	DRILL Ø	THICKNESS MAX. FIXTURE		
RENO3208BL	3,2 x 8 9003	**7,823**	3,3	3,5 – 5	500	6.000
RENO3210BL	3,2 x 10 9003	**8,270**	3,3	5 – 7	500	6.000
RENO3212BL	3,2 x 12 9003	**8,677**	3,3	7 – 9	500	6.000
RENO4008BL	4 x 8 9003	**9,533**	4,1	3 – 5	500	6.000
RENO4010BL	4 x 10 9003	**10,317**	4,1	5 – 6,5	500	6.000
RENO4012BL	4 x 12 9003	**10,690**	4,1	6,5 – 8,5	500	6.000
RENO4014BL	4 x 14 9003	**11,753**	4,1	8,5 – 10,5	500	6.000
RENO4810BL	4,8 x 10 9003	**14,127**	4,9	4 – 6	500	3.000
RENO4812BL	4,8 x 12 9003	**14,857**	4,9	6 – 8	500	3.000
RENO4814BL	4,8 x 14 9003	**16,210**	4,9	8 – 10	250	3.000
RENO4816BL	4,8 x 16 9003	**16,870**	4,9	10 – 12	250	3.000

RE Rivets

RE-NE

Black panhead. Aluminium

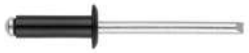

METAL — Metal sheet — Metal sheet - heavy profiles — Aluminium frames — AL

CODE	SIZE	€/100	DRILL Ø	THICKNESS MAX. FIXTURE		
RENO3208NE	3,2 x 8 9005	**7,823**	3,3	3,5 – 5	500	6.000
RENO3210NE	3,2 x 10 9005	**8,270**	3,3	5 – 7	500	6.000
RENO3212NE	3,2 x 12 9005	**8,677**	3,3	7 – 9	500	6.000
RENO4008NE	4 x 8 9005	**9,533**	4,1	3 – 5	500	6.000
RENO4010NE	4 x 10 9005	**10,317**	4,1	5 – 6,5	500	6.000
RENO4012NE	4 x 12 9005	**10,690**	4	6,5 – 8,5	500	6.000
RENO4014NE	4 x 14 9005	**11,753**	4,1	8,5 – 10,5	500	6.000
RENO4810NE	4,8 x 10 9005	**14,127**	4,9	4 – 6	500	3.000
RENO4812NE	4,8 x 12 9005	**14,857**	4,9	6 – 8	500	3.000
RENO4814NE	4,8 x 14 9005	**16,210**	4,9	8 – 10	250	3.000
RENO4816NE	4,8 x 16 9005	**16,870**	4,9	10 – 12	250	3.000

RE-FL

Peel head

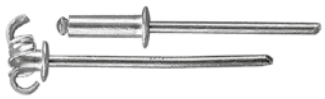

METAL — Metal sheet — Metal sheet - heavy profiles — Aluminium frames — ZINC

CODE	SIZE	€/100	DRILL Ø	THICKNESS MAX. FIXTURE		
REFL4012	4 x 12,1	**10,427**	4,1	4 – 6,5	500	6.000
REFL4014	4 x 13,9	**11,810**	4,1	6 – 9	500	3.000
REFL4016	4 x 15,7	**12,377**	4,1	8 – 11	500	3.000
REFL4018	4 x 17,4	**12,843**	4,1	10 – 13	500	3.000
REFL4020	4 x 19,2	**13,500**	4,1	12 – 15	500	3.000
REFL4814	4,8 x 14,5	**15,990**	5	4 – 8	250	3.000
REFL4816	4,8 x 16,3	**16,903**	5	6 – 10	250	3.000
REFL4830	4,8 x 30	**26,010**	5	19 – 24	200	1.200
REFL4835	4,8 x 35	**30,120**	5	24 – 29	150	1.800
REFL4840	4,8 x 40	**34,883**	5	29 – 34	150	1.800
REFL4845	4,8 x 45	**42,303**	5		150	900
REFL4850	4,8 x 50	**46,213**	5		150	900
REFL4818	4,8 x 18	**19,207**	5	8 – 12	250	3.000
REFL4824	4,8 x 24	**22,660**	5	15 - 18	200	2.400
REFL4025	4 x 25	**17,317**	4,1	15 - 20	250	3.000

Blister

CODE	SIZE	€/BAG	PCS.	BAGS
BZREFL4835	4,8 x 35	**2,029**	5	20

Window Box

CODE	SIZE	€/BOX	PCS.	BOXES
VREFL4835	4,8 x 35	**9,440**	25	8

Blind rivet nuts TR

TR-AV

Countersunk head

METAL — Metal sheet · Metal sheet - heavy profiles · Aluminium frames · ZINC



CODE	SIZE	€/100		
TRAV0411	M4 x 11	**17,060**	500	12.000
TRAV0513	M5 x 13	**18,297**	500	6.000
TRAV0616	M6 x 16	**22,867**	500	3.000
TRAV0819	M8 x 19	**26,760**	250	3.000
TRAV1021	M10 x 21	**40,790**	250	1.500

TR-CA

Wide head

METAL — Metal sheet · Metal sheet - heavy profiles · Aluminium frames · ZINC



CODE	SIZE	€/100		
TRCA0310	M3 x 10	**11,887**	500	12.000
TRCA0410	M4 x 10	**24,770**	500	12.000
TRCA0411	M4 x 11	**24,770**	500	12.000
TRCA0512	M5 x 12	**26,600**	500	12.000
TRCA0515	M5 x 15	**26,600**	500	6.000
TRCA0614	M6 x 14	**33,357**	250	3.000
TRCA0616	M6 x 16	**33,357**	250	3.000
TRCA0816	M8 x 16	**24,693**	250	3.000
TRCA0818	M8 x 18	**25,547**	250	1.500
TRCA1017	M10 x 17	**40,800**	250	1.500
TRCA1022	M10 x 22	**42,230**	250	1.500
TRCA1223	M12 x 23	**68,387**	250	1.000

TR-CR

Flat head

METAL — Metal sheet · Metal sheet - heavy profiles · Aluminium frames · ZINC



CODE	SIZE	€/100		
TRCR0410	M4 x 10	**24,750**	500	12.000
TRCR0511	M5 x 11	**25,007**	500	12.000
TRCR0614	M6 x 14	**31,310**	250	6.000
TRCR0815	M8 x 15	**36,453**	250	3.000
TRCR1019	M10 x 19	**36,557**	250	1.500

RM Riveter

RM-MA

METAL

Hand tool for blind rivets



CODE	€/PC	SUITABLE FOR	
RMMA01	**25,825**	1	40

RM-PA

METAL

Long arm riveter



CODE	€/PC	SUITABLE FOR	
RMPA01	**180,535**	1	10

RM-EX

METAL

Lazy tong riveter



CODE	€/PC	SUITABLE FOR	
RMEX01	**168,131**	1	5



CABLE, CHAIN AND FENCE ACCESSORIES

SJ-Z

Wire rope clip DIN 741. Zinc plated

SJ-Z

DIN-741 cable clip. Zinc-plated



METAL

Cable Chain Rope

CODE	METRIC	Ø CABLE	€/100	
SJZ0403	M4	d3	**31,500**	200
SJZ0505	M5	d5	**36,400**	200
SJZ0506	M5	d6 - 6,5	**45,600**	100
SJZ0608	M6	d8	**65,600**	100
SJZ0810	M8	d10	**87,900**	100
SJZ0811	M8	d11	**112,100**	100
SJZ1013	M10	d13	**153,800**	50
SJZ1014	M10	d14	**177,100**	50
SJZ1216	M12	d16	**263,100**	50
SJZ1220	M12	d20	**334,100**	25
SJZ1422	M14	d22	**425,300**	15
SJZ1426	M14	d26	**599,100**	15
SJZ1630	M16	d30	**1.100,600**	10
SJZ1634	M16	d34	**1.292,900**	10
SJZ1640	M16	d40	**1.610,700**	5

Blister

CODE	SIZE	€/BAG	PCS.	BAGS
BZSJZ0403	d3	**4,622**	4	20
BZSJZ0505	d5	**4,622**	2	20
BZSJZ0506	d6 - 6,5	**4,622**	2	20
BZSJZ0608	d8	**4,622**	2	20

TS-GA

Turnbuckle hook/ring DIN-1480. Zinc-plated

TS-GA

Turnbuckle hook/ring DIN-1480. Zinc-plated



METAL

Cable Chain Rope

CODE	METRIC	Ø CABLE	€/100	
TSGA06	M6	1/4"	**294,000**	50
TSGA08	M8	5/16"	**392,500**	25
TSGA10	M10	3/8"	**560,700**	25
TSGA12	M12	1/2"	**843,600**	10
TSGA14	M14	9/16"	**1.189,800**	10
TSGA16	M16	5/8"	**1.671,000**	10
TSGA20	M20	3/4"	**3.022,100**	5
TSGA22	M22	7/8"	**4.173,400**	1
TSGA24	M24	1"	**5.189,700**	1
TSGA30	M30	1 1/4"	**10.408,400**	1
TSGA36	M36	1 1/2"	**31.797,800**	1

Blister

CODE	SIZE	€/BAG	PCS.	BAGS
BZTSGA06	1/4"	**4,622**	1	35

Fencing hardware — CM-T

METAL

CM-TENSO

Wire tightener



CODE	SIZE	€/100	
CMTENSOAL	85 x 29,5	**126,497**	250

METAL

CM-TENSOVE

Green wire tightener



CODE	SIZE	€/100	
CMTENSOVE	85 x 29,5	**197,603**	250

METAL

CM-TT

Wire tightening screw



CODE	SIZE	€/100	
CMTENSOTO	Tornillo	**119,119**	450

Ring nut D-582. Zinc plated — EV-H

METAL

Cable Chain Rope

EV-H

Ring nut D-582. Zinc plated



CODE	METRIC	Ø CABLE	€/100	
EVH06	M6	20	**205,300**	100
EVH08	M8	20	**215,800**	100
EVH10	M10	25	**306,000**	100
EVH12	M12	30	**377,900**	100
EVH14	M14	35	**503,400**	50
EVH16	M16	35	**572,800**	50
EVH18	M18	40	**767,100**	50
EVH20	M20	40	**803,100**	50
EVH22	M22	45	**1.268,700**	25
EVH24	M24	50	**1.582,300**	25
EVH30	M30	60	**3.528,600**	10
EVH36	M36	70	**5.782,600**	1

EV-M

Ring nut D-580. Zinc plated

EV-M

Ring nut D-580. Zinc plated



METAL — Cable — Chain — Rope — ZINC

CODE	METRIC	Ø CABLE	€/100	
EVM08	M8	20	**215,800**	100
EVM10	M10	25	**306,000**	100
EVM12	M12	30	**377,900**	50
EVM14	M14	35	**503,400**	50
EVM16	M16	35	**572,800**	50
EVM18	M18	40	**767,100**	50
EVM20	M20	40	**803,100**	25
EVM22	M22	45	**1.268,700**	25
EVM24	M24	50	**1.582,300**	25
EVM30	M30	60	**3.528,600**	10
EVM36	M36	70	**5.782,600**	1
EVM42	M42	80	**10.731,500**	1
EVM48	M48	90	**18.152,900**	1

GR-Z

Straight shackle. Zinc plated

GR-Z

Straight shackle. Zinc-plated



METAL — Cable — Chain — Rope — ZINC

CODE	METRIC	Ø CABLE	€/100	
GRZ05	M5	10	**110,600**	50
GRZ06	M6	12	**116,100**	50
GRZ08	M8	16	**146,300**	50
GRZ10	M10	19	**191,900**	50
GRZ11	M11	22	**331,700**	25
GRZ12	M12	25	**301,900**	25
GRZ14	M14	28	**462,900**	25
GRZ16	M16	32	**624,300**	10
GRZ18	M18	36	**968,600**	5
GRZ20	M20	38	**1.111,800**	5
GRZ22	M22	44	**1.481,000**	1
GRZ25	M25	50	**2.166,400**	1
GRZ28	M28	56	**3.221,600**	1
GRZ32	M32	64	**5.262,000**	1
GRZ36	M36	70	**10.104,500**	1
GRZ42	M42	76	**19.298,600**	1
GRZ45	M45	80	**25.651,200**	1
GRZ50	M50	90	**33.680,500**	1

Blister

CODE	SIZE	€/BAG	PCS.	BAGS
BZGRZ05	10	**4,622**	4	20
BZGRZ06	12	**4,622**	4	20
BZGRZ08	16	**4,622**	2	20
BZGRZ10	19	**4,622**	1	20

Thimble DIN-6899/A. Zinc plated GD-Z

METAL | Cable | Chain | Rope | ZINC

CODE	METRIC	Ø CABLE	€/100	
GDZ03	M3	12	**43,200**	200
GDZ04	M4	13	**44,200**	200
GDZ05	M5	14	**50,300**	200
GDZ06	M6	15	**56,500**	200
GDZ08	M8	18	**62,300**	100
GDZ10	M10	22	**85,300**	100
GDZ13	M13	28	**182,000**	50
GDZ15	M15	32	**270,700**	50
GDZ18	M18	40	**625,800**	50
GDZ20	M20	44	**782,100**	25
GDZ24	M24	48	**961,000**	10

Blister

CODE	SIZE	€/BAG	PCS.	BAGS
BZGDZ03	12	**4,622**	6	20
BZGDZ04	13	**4,622**	4	20
BZGDZ05	14	**4,622**	4	20
BZGDZ06	15	**4,622**	4	20

GD-Z

Thimble DIN-6899/A. Zinc-plated





NEW **RIGGING HARDWARE** RANGE

- DEE SHACKLES
- TURNBUCKLES EYE AND HOOK
- THIMBLES
- LIFTING EYES
- WIRE ROPE CLIPS

CM Fencing accesories

CM-BP

Clamp post



METAL

CODE	SIZE	€/100	
CMBRPOS33	33	**173,632**	250
CMBRPOS40	40	**179,550**	200
CMBRPOS42	42	**182,417**	200
CMBRPOS48	48	**188,738**	200
CMBRPOS50	50	**191,545**	200
CMBRPOS60	60	**206,696**	150

CM-BT

Screw tighten clamp



METAL

CODE	SIZE	€/100	
CMBRTEN48	48	**340,071**	200

CM-TA

Stopper



METAL

CODE	SIZE	€/100	
CMTAPON33	33	**80,413**	500
CMTAPON40	40	**88,281**	350
CMTAPON42	42	**91,662**	350
CMTAPON48	48	**101,847**	300
CMTAPON50	50	**113,575**	250
CMTAPON60	60	**131,768**	250

CM-TP

Post stopper



METAL

CODE	SIZE	€/100	
CMTAPOS33	33	**217,273**	100
CMTAPOS40	40	**228,004**	200
CMTAPOS42	42	**228,669**	200
CMTAPOS48	48	**251,993**	150

CM-UN

Fastener



METAL

CODE	SIZE	€/100	
CMUNAAGUJ	Con agujero	**25,116**	1.500



FIXINGS AND ACCESSORIES FOR PLASTERBOARD

PL

Drywall screw for plasterboard. Black-phosphated. Bugle head, twinfast thread, S-point. PH recess

HOLLOWS

Plaster-board

PL-F

Screw



CODE	SIZE	€/100		DRILL CAPACITY	MIN. ORDER QTY.		
PL35019	3,5 x 19	**2,493**	PH2	< 0.6 mm	2.000	1.000	12.000
PL35025	3,5 x 25	**2,340**	PH2	< 0.6 mm	2.000	1.000	12.000
PL35035	3,5 x 35	**3,101**	PH2	< 0.6 mm	2.000	1.000	6.000
PL35045	3,5 x 45	**3,714**	PH2	< 0.6 mm	1.000	500	6.000
PL35055	3,5 x 55	**4,760**	PH2	< 0.6 mm	1.000	500	3.000
PL39025	3,9 x 25	**2,896**	PH2	< 0.6 mm	2.000	1.000	12.000
PL39035	3,9 x 35	**4,019**	PH2	< 0.6 mm	2.000	1.000	6.000
PL39045	3,9 x 45	**5,067**	PH2	< 0.6 mm	1.000	500	3.000
PL39055	3,9 x 55	**6,065**	PH2	< 0.6 mm	1.000	500	3.000
PL42070	4,2 x 70	**9,152**	PH2	< 0.6 mm	500	500	3.000
PL42080	4,2 x 80	**11,770**	PH2	< 0.6 mm	500	500	2.000
PL48090	4,8 x 90	**20,021**	PH2	< 0.6 mm	500	500	1.500
PL48100	4,8 x 100	**25,194**	PH2	< 0.6 mm	500	500	1.000
PL48110	4,8 x 110	**27,856**	PH2	< 0.6 mm	500	500	1.000
PL48120	4,8 x 120	**30,849**	PH2	< 0.6 mm	500	500	1.000
PL48130	4,8 x 130	**33,896**	PH2	< 0.6 mm	500	500	1.000

FREE - 1 bit inside each box

HIGH PERFORMANCE NEEDLE-POINT

Blister

CODE	SIZE	€/BAG	PCS.	BAGS
BZPL35025	3,5 x 25	**2,565**	50	10
BZPL35035	3,5 x 35	**2,565**	40	10
BZPL35045	3,5 x 45	**2,565**	25	10

Window Box

CODE	SIZE	€/BOX	PCS.	BOXES
VPL35025	3,5 x 25	**7,517**	250	8
VPL35035	3,5 x 35	**9,503**	250	8
VPL35045	3,5 x 45	**7,179**	150	8

PL-EP

Plastic container



HOLLOWS

Plaster-board

CODE	SIZE	€/100		DRILL CAPACITY	MIN. ORDER QTY.	PCS X JAR
PLEP35025	3,5 x 25	**93,616**	PH2	< 0.6 mm	1 jar	4.000
PLEP35035	3,5 x 35	**92,806**	PH2	< 0.6 mm	1 jar	3.000



Drywall screw for plasterboard with bugle head, coarse thread, S-point

PL-RA

HOLLOWS

Plaster-board

PH PHOSPHATED



CE

CODE	SIZE	€/100		MIN. ORDER QTY.		
PLRA3925	3,9 x 25	**3,083**	PH2	2.000	1.000	12.000
PLRA3935	3,9 x 35	**4,074**	PH2	2.000	1.000	6.000
PLRA3945	3,9 x 45	**5,259**	PH2	1.000	500	3.000
PLRA3955	3,9 x 55	**5,524**	PH2	1.000	500	3.000
PLRA4835	4,8 x 35	**5,173**	PH2	2.000	1.000	6.000

Drywall screw for plasterboard, with bugle head, twinfastthread

PL-TR

HOLLOWS

Plaster-board

PH PHOSPHATED



CE

CODE	SIZE	€/100		DRILL CAPACITY	MIN. ORDER QTY.		
PLTR3525	3,5 x 25	**3,146**	PH2	0,8 - 3 mm	2.000	1.000	12.000
PLTR3535	3,5 x 35	**3,934**	PH2	0,8 - 3 mm	2.000	1.000	6.000
PLTR3545	3,5 x 45	**4,925**	PH2	0,8 - 3 mm	1.000	500	6.000

Drywall screws for plasterboard. Wide head

PL-CA

HOLLOWS

Plaster-board

Z ZINC



CE

CODE	SIZE	€/100			
PLCAZ4213	4,2 x 13	**3,436**	PH2	1.000	12.000
PLCAZ4216	4,2 x 16	**3,736**	PH2	1.000	12.000
PLCAZ4219	4,2 x 19	**4,020**	PH2	1.000	12.000
PLCAZ4225	4,2 x 25	**4,580**	PH2	1.000	6.000
PLCAZ4232	4,2 x 32	**5,676**	PH2	500	6.000
PLCAZ4241	4,2 x 41	**6,440**	PH2	500	3.000
PLCAZ4251	4,2 x 51	**7,296**	PH2	200	2.400

CP

Tape for plasterboards

CP-PA

Paper tape for joints



HOLLOWS

Plaster-board

CODE	ROLL LENGTH	WIDTH	€/1PC	
CPPA023	23 m	50 mm	4,397	20
CPPA075	75 m	50 mm	8,450	20
CPPA150	150 m	50 mm	12,600	10

CE

CP-GV

Reinforced tape



HOLLOWS

Plaster-board

CODE	ROLL LENGTH	€/1PC		
CPGV012	12,5 m	20,467	1	20
CPGV030	30 m	28,423	1	10

CE

CP-AC

Adhesive acoustic band



HOLLOWS

Plaster-board

CODE	ROLL LENGTH	WIDTH	€/1PC	
CPAC300453	30m x 45 x 3	45 mm	16,186	26
CPAC300703	30m x 70 x 3	70 mm	24,456	17

CP-MV

Fiberglass mesh tape



HOLLOWS

Plaster-board

CODE	ROLL LENGTH	€/1PC	
CPMV020	20 m	4,129	100
CPMV045	45 m	7,773	64
CPMV090	90 m	15,813	36
CPMV150	150 m	21,963	16

Universal anchor — OME

MULTI-MATERIAL

Stone | Hollow brick | Adobe Brick | Solid brick | Aerated concrete | Hollow concrete | Concrete | Reinforced concrete

CODE	SIZE	€/100		
OMEM06	M6	**65,017**	100	1.000



CE

M6 half clamp — MAB

Stone | Hollow brick | Adobe Brick | Solid brick | Aerated concrete | Hollow concrete | Concrete | Reinforced concrete

CODE	SIZE	€/100		
MABM6018	18 (M6)	**18,513**	100	2.400



Suspension bracket — HO

HO-CU

Pivot sleeve

Aluminium profiles

CODE	SIZE	PROFILE	€/100		
HOCUM647	M6 (TC47)	TC 47	**36,973**	100	1.000



CE

HO-CR

Straight

Aluminium profiles

CODE	SIZE	PROFILE	€/100		
HOCRM647	M6 (TC47)	TC 47	**53,853**	100	1.000
HOCRM660	M6 (TC60)	TC 60	**72,327**	100	-



CE

EMP

Connecting piece for profiles



Aluminium profiles

CODE	PROFILE	€/100		
EMPTC45	TC 45	**45,545**	50	150
EMPTC47	TC 47	**45,545**	50	500
EMPTC60	TC 60	**65,542**	50	500

CAB

Trestle for profile intersection



Aluminium profiles

CODE	PROFILE	€/100		
CABTC47	TC 47	**65,090**	50	400
CABTC60	TC 60	**81,217**	50	-

ADU

Direct “U” hook for supporting profiles on false ceilings



Aluminium profiles

CODE	PROFILE	€/100		
ADUTC47	TC 47	**80,119**	100	400
ADUTC60	TC 60	**82,542**	100	400



* The product is provided without folding.

PCU

Angled



METAL

CODE	SIZE	€/100	MIN. ORDER QTY.		
PCU0005	5	**21,397**	200	100	800
PCU0006	6	**21,892**	200	100	800

Accessory for hanging — SUS

Aluminium profiles

CODE	PROFILE	LENGTH	€/100		
SUSTC47090	TC47	90	**26,809**	100	1.000
SUSTC47180	TC47	180	**49,192**	100	500
SUSTC47240	TC47	240	**113,495**	100	300
SUSTC47300	TC47	300	**138,315**	50	300
SUSTC47400	TC47	400	**205,710**	50	200



CE

Trap doors for plasterboard — TR

HOLLOWS — Plaster-board

TR-BL

White lacquered (RAL 9016)

CODE	SIZE	€/PC	
TRBL200200	200 x 200	**31,080**	1
TRBL300300	300 x 300	**42,985**	1
TRBL400400	400 x 400	**60,522**	1
TRBL500500	500 x 500	**85,332**	1
TRBL600600	600 x 600	**109,115**	1



HOLLOWS — Plaster-board

TR-13

13 mm

CODE	SIZE	THICKNESS	€/PC	
TR13200200	200 x 200	13 mm	**46,044**	2
TR13300300	300 x 300	13 mm	**56,172**	2
TR13400400	400 x 400	13 mm	**69,901**	2
TR13500500	500 x 500	13 mm	**87,667**	1
TR13600600	600 x 600	13 mm	**109,311**	1



HOLLOWS — Plaster-board

TR-15

15 mm

CODE	SIZE	THICKNESS	€/PC	
TR15200200	200 x 200	15 mm	**100,254**	2
TR15300300	300 x 300	15 mm	**111,711**	2
TR15400400	400 x 400	15 mm	**129,399**	2
TR15500500	500 x 500	15 mm	**156,237**	1
TR15600600	600 x 600	15 mm	**182,276**	1





DIRECT FIXING

FP-GUN

Semiautomatic powder-actuated nail gun

FP08GUN

For 8 mm nails



POWDER

Hollow concrete | Concrete

CODE	SIZE	€/PC	
FP08GUN	8mm	**695,248**	1

FP12GUN

For 12 mm nails



POWDER

Hollow concrete | Concrete

CODE	SIZE	€/PC	
FP12GUN	12mm	**1.347,667**	1

GUNS SUPPLIED WITH COMPLETE KIT CASE

TOOL CASE CONTENT

- **Gun**
- **Brush**
- **User manual**
- **Safety glasses**
- **Spare parts**
- **Lubricant oil**

FP-IM

Pistons for powder guns

FP-IP

Powder cartridges

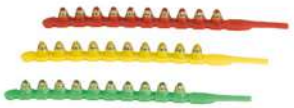

POWDER

CODE	POWER	COLOUR	€/100	PCS. X STRIP	
FPP3VE	POWER 3		**28,393**	10	100
FPP4AM	POWER 4		**28,393**	10	100
FPP5RO	POWER 5		**28,393**	10	100

FP-CR

Disc powder cartridges



POWDER

CODE	POWER	COLOUR	€/100	PCS. X DISC	
FPCRAM	POWER 4		**38,229**	10	100
FPCRRO	POWER 5		**38,229**	10	100

FP-CL08

Nails for powder-actuated FP08 guns

FP-CG 08

Knurled nails with plastic washer

POWDER — Metal sheet — I-beam — ZINC

CODE	SIZE	€/100		
FPCG0816	3,8 x 16	**24,103**	100	4.500
FPCG0819	3,8 x 19	**26,753**	100	4.500



FP-CL 08

Standard nails with rubber washer

POWDER — Reinforced concrete — Concrete — ZINC

CODE	SIZE	€/100		
FPCL0816	3,8 x 16	**11,370**	100	4.500
FPCL0819	3,8 x 19	**11,777**	100	4.500
FPCL0825	3,8 x 25	**11,857**	100	4.500
FPCL0827	3,8 x 27	**12,093**	100	2.400
FPCL0832	3,8 x 32	**12,687**	100	2.400
FPCL0838	3,8 x 38	**14,153**	100	2.400
FPCL0844	3,8 x 44	**15,143**	100	2.400
FPCL0851	3,8 x 51	**17,180**	100	2.400
FPCL0857	3,8 x 57	**17,747**	100	2.400
FPCL0864	3,8 x 64	**19,717**	100	1.200
FPCL0870	3,8 x 70	**20,537**	100	1.200



FP-AP 08

Standard nails with 66mm plastic washer

POWDER — Reinforced concrete — Concrete — ZINC

CODE	SIZE	€/100		
FPAP085166	3,8 x 51	**128,417**	100	200



FP-C30

Standard nails with 35mm plastic washer, for fixing geotextiles

POWDER — Reinforced concrete — Concrete — ZINC

CODE	SIZE	€/100	
FPC303708	3,8 x 37	**54,723**	100
FPC304708	3,8 x 47	**56,660**	100



FP-AM 08

Standard nails with 66mm metalic washer

POWDER — Reinforced concrete — Concrete — ZINC

CODE	SIZE	€/100		
FPAM0837	3,8 x 37	**32,833**	100	600
FPAM0851	3,8 x 51	**35,837**	100	600



FP-CL08

Nails for powder-actuated FP08 guns

FP-CR 08 M6

M6 X 8 thread standard nails for the clamps installation



POWDER — Reinforced concrete — Concrete — I-beam — ZINC

CODE	SIZE	€/100		
FPCR0812*	3,8 x 12	**28,823**	100	2.400
FPCR0822	3,8 x 22	**29,660**	100	2.400
FPCR0827	3,8 x 27	**30,120**	100	2.400

* Valid to install on steel

NEW FP-CR 08 M8

M8 X 8 thread standard nails for the clamps installation



POWDER — Reinforced concrete — Concrete — ZINC

CODE	SIZE	€/100		
FPCRM80812*	3,8 x 12	**38,047**	100	
FPCRM80827	3,8 x 27	**40,662**	100	

* Valid to install on steel

FP-PI 08

13mm clamp clip with nail and red rubber



POWDER — Reinforced concrete — Concrete — ZINC

CODE	SIZE	€/100		
FPPI081613	3,8 x 13	**61,593**	100	600

FP-CL12

Nails for powder-actuated FP12 guns

FP-CG 12

Knurled nails with 12 mm metal washer



POWDER — I-beam — kg. — ZINC

CODE	SIZE	€/100		
FPCG1612	3,8 x 16	**14,847**	100	4.500
FPCG1912	3,8 x 19	**15,257**	100	-

FP-CGD12

Knurled nails with 12 mm metal and plastic double washer



POWDER — I-beam — kg. — ZINC

CODE	SIZE	€/100	
FPCGD1612	3,8 x 16	**18,677**	100
FPCGD1912	3,8 x 19	**19,180**	100

FP-CL12

Standard nails with 12 mm metal washer



POWDER — Reinforced concrete — Concrete — kg. — ZINC

CODE	SIZE	€/100		
FPCL2212	3,8 x 22	**14,090**	100	-
FPCL2712	3,8 x 27	**14,817**	100	1.000
FPCL3212	3,8 x 32	**15,630**	100	1.000
FPCL3712	3,8 x 37	**16,533**	100	-
FPCL4212	3,8 x 42	**17,520**	100	-
FPCL4712	3,8 x 47	**19,070**	100	2.400

Nails for powder-actuated FP12 guns

FP-CL12

FP-CLD12

Standard nails with a 12 mm metal and a plastic double washer



POWDER | Reinforced concrete | Concrete | kg. | ZINC

CODE	SIZE	€/100	
FPCLD2212	3,8 x 22	**18,270**	100
FPCLD2712	3,8 x 27	**19,210**	100
FPCLD3212	3,8 x 32	**20,300**	100
FPCLD3712	3,8 x 37	**21,473**	100
FPCLD4212	3,8 x 42	**22,730**	100
FPCLD4712	3,8 x 47	**24,717**	100

FP-CT12

Nails for false ceilling installation



POWDER | Reinforced concrete | Concrete | kg. | ZINC

CODE	SIZE	€/100	
FPCT3212	3,8 x 32	**41,177**	100

Pistons for FP08GUN and FP12GUN guns

FP-PIS

FP-PISCL08

Pistón para pistola FP08GUN



POWDER

CODE	SIZE	€/PC	
FPPISCL08	8	**56,364**	1

Valid for nails: Ref: FP-AP y FP-C30

FP-PISPL08

Pistón plano para pistola FP08GUN



POWDER

CODE	SIZE	€/PC	
FPPISPL08	8	**56,088**	1

Valid for nails:. Ref: FP-CG, FP-CL, FP-AM, FP-CR, FP-PI.

FP-PISCL12

Pistón para pistola FP12GUN



POWDER

CODE	SIZE	€/PC	
FPPISCL12	12	**86,625**	1



Valid for nails: Ref: FP-CG12, FP-CGD12, FP-CL12, FP-CLD12.

FP-PISCM12

Pistón para pistola FP12GUN



POWDER

CODE	SIZE	€/PC	
FPPISCM12	M6 x 8	**94,927**	1



Available for nails of 12, M6

FP-PISCT12

Pistón para pistola FP12GUN



POWDER

CODE	SIZE	€/PC	
FPPISCT12	12	**97,454**	1



Available for nails FPCT3212

FG-GUN

Semiautomatic, wireless, gas-actuated nail gun

FG-GUN

Semiautomatic, wireless, gas-actuated nail gun for drywall

GAS

CODE	SIZE	€/PC	
FG60GUN	Gas gun	2.160,000	1





TOOL CASE CONTENT

- Gas gun
- Charger
- 2 batteries
- Allen key
- User manual

GUN SUPPLIED WITH COMPLETE KIT CASE

- Direct anchoring technique for light fixings: organising cabling, positioning of metallic profiles for the installation of plasterboard walls, etc.
- Fixing of metal or wood to concrete or blocks.
- Gun supplied with complete kit case, including battery charger.
- Long-lasting batteries.
- Suitable for nails up to 40 mm. long.
- Gas charge supplied with consumables.

NEW

FG-GUNEL

Semiautomatic, wireless, gas-actuated nail gun for electricians

GAS

CODE	SIZE	€/PC	
FG60GUNEL	Electrician gun	2.376,667	1



TOOL CASE CONTENT

- Gas gun
- Charger
- 2 batteries
- Allen key
- User manual
- Barrel for electricians

Nails for gas-actuated guns — FG-CL

GAS | Metal sheet - heavy profiles | Hardwood | Aerated concrete | Concrete | kg. | ZINC

CODE	SIZE	€/100	
FGCL15	2,6 x 15	**13,640**	1.000
FGCL20	2,6 x 20	**14,063**	1.000
FGCL25	2,6 x 25	**14,293**	1.000
FGCL30	2,6 x 30	**14,430**	1.000
FGCL35	2,6 x 35	**15,737**	1.000
FGCL40	2,6 x 40	**16,917**	1.000

FG-CL

Standard nails



+ 1 FUELL CELL

GAS | Metal sheet - heavy profiles | Hardwood | Aerated concrete | Concrete | kg. | ZINC

CODE		SIZE	€/100	
FGCLH15	NEW	3,1 x 15	**15,533**	1.000
FGCLH17		3,1 x 17	**15,840**	1.000
FGCLH19		3,1 x 19	**15,840**	1.000
FGCLH22		3,1 x 22	**15,840**	1.000
FGCLH27		3,1 x 27	**16,573**	1.000
FGCLH32		3,1 x 32	**17,157**	1.000

FG-CLH

Nails for hard materials



+ 1 FUELL CELL

Accessories for installation with gas gun — FG-AC

GAS

CODE	SIZE	€/100		
FGARAM25	Ø25	**19,215**	200	4.800

FG-ARAM NEW

Metallic washer



GAS

CODE	SIZE	€/100		
FGARAM25EP	Ø25	**20,368**	1.000	-

FG-ARAM EP NEW

Metallic washer. Plastic container



GAS | Metal sheet - heavy profiles | Hardwood | Aerated concrete | Concrete | ZINC

CODE	SIZE	€/100		
FGPLET	M6 - M8	**177,512**	100	400

FG-PLET

Threaded platen for rod



FG-AC

Accessories for installation with gas gun

AB-PID

Conduit clip with single hole for shooting



GAS

Metal sheet - heavy profiles | Hardwood | Aerated concrete | Concrete

ZINC

CODE	SIZE	€/100		
ABPID016	16	**13,140**	100	1.200
ABPID020	20	**20,327**	100	1.200
ABPID025	25	**23,820**	100	600
ABPID032	32	**29,567**	100	600

OME

Universal anchor



CE

MULTI-MATERIAL

Reinforced concrete | Concrete | Hollow concrete | Aerated concrete | Solid brick | Adobe Brick | Hollow brick | Stone

ZINC

CODE	SIZE	€/100		MINIMUM UNITS SALE
OMEM06	M6	**65,017**	100	1.000

FG-ABRA

Snap clamp



GAS

Metal sheet - heavy profiles | Hardwood | Aerated concrete | Concrete

NYLON

CODE	SIZE	€/100		
FGABRA15	15 - 18	**59,578**	100	-
FGABRA20	20 - 25	**62,960**	50	200
FGABRA25	25 - 32	**75,703**	50	-

INSTALLATION

GUN



FG-BASE

Flange base



GAS

Metal sheet - heavy profiles | Hardwood | Aerated concrete | Concrete

NYLON

CODE		SIZE	€/100		
FGBASENE			**16,173**	100	1.200
FGBASEGR	NEW		**16,659**	100	1.200

FG-APG

Accessories for gas gun

GAS

FG-CAEL NEW

Special pistol barrel for electricians

CODE	SIZE	€/PC	
FGCAEL	11	216,667	1



GAS

FG-CLCAR NEW

Gun magazine for 40 nails

CODE	SIZE	€/PC	
FGCLCAR40	40	305,926	1



GAS

FG-IMAN

Magnet

CODE	SIZE	€/PC	
FGIMAN	Øinterior 11,25	119,926	1



GAS

FG-BAT

FP60GUN Battery

CODE	€/PC	
FG60BAT	283,333	1



GAS

FG-CAR

FP60GUN Charger

CODE	€/PC	
FG60CAR	239,221	1



GAS


Metal sheet - heavy profiles


Hardwood


Aerated concrete


Concrete

FG-GAS

Gas cartridge

CODE	€/PC		
FG60GAS	50,985	1	12





SCREWS FOR DECKING AND FAÇADES

DIN-7504-K Self-drilling screw with hexagonal head

DIN-7504-K

Screw



P.160
Available in
diferent colours

Available in diferent coatings.
Ask for price and delivery time.

METAL

Metal sheet | Metal sheet - heavy profiles

CODE	SIZE	€/100			
ABE3509	3,5 x 9,5	2,697	6	1.000	24.000
ABE3513	3,5 x 13	2,673	6	1.000	12.000
ABE3516	3,5 x 16	3,143	6	1.000	12.000
ABE3519	3,5 x 19	3,190	6	1.000	12.000
ABE4213	4,2 x 13	3,613	7	1.000	12.000
ABE4216	4,2 x 16	3,990	7	1.000	8.000
ABE4219	4,2 x 19	4,623	7	1.000	8.000
ABE4225	4,2 x 25	5,233	7	500	6.000
ABE4232	4,2 x 32	6,017	7	500	6.000
ABE4238	4,2 x 38	6,847	7	500	6.000
ABE4813	4,8 x 13	4,853	8	1.000	8.000
ABE4816	4,8 x 16	5,250	8	1.000	6.000
ABE4819	4,8 x 19	5,357	8	500	6.000
ABE4825	4,8 x 25	6,340	8	500	6.000
ABE4832	4,8 x 32	7,543	8	500	3.000
ABE4838	4,8 x 38	8,467	8	500	3.000
ABE5519	5,5 x 19	7,333	8	500	6.000
ABE5522	5,5 x 22	7,490	8	500	4.000
ABE5525	5,5 x 25	8,500	8	500	6.000
ABE5532	5,5 x 32	9,850	8	500	3.000
ABE5538	5,5 x 38	11,180	8	500	3.000
ABE5550	5,5 x 50	13,517	8	500	2.000

CODE	SIZE	€/100			
ABE5563	5,5 x 63	16,200	8	250	1.000
ABE5575	5,5 x 75	19,783	8	250	1.500
ABE6319	6,3 x 19	11,000	10	500	3.000
ABE6325	6,3 x 25	12,100	10	500	3.000
ABE6332	6,3 x 32	14,307	10	500	2.000
ABE6338	6,3 x 38	15,473	10	500	2.000
ABE6350	6,3 x 50	18,860	10	250	1.500
ABE6363	6,3 x 63	22,433	10	250	1.500
ABE6375	6,3 x 75	27,100	10	250	1.000
ABE6380	6,3 x 80	28,970	10	250	1.000
ABE6390	6,3 x 90	36,163	10	250	750
ABE6310	6,3 x 100	37,447	10	100	600
ABE6311	6,3 x 110	44,257	10	100	600
ABE6312	6,3 x 120	53,283	10	100	600
ABE6313	6,3 x 130	59,133	10	100	600
ABE6314	6,3 x 140	66,470	10	100	600
ABE6315	6,3 x 150	95,763	10	100	600
ABE6316	6,3 x 160	107,453	10	100	400
ABE6318	6,3 x 180	139,043	10	100	300
ABE6320	6,3 x 200	175,590	10	100	300
ABE6322	6,3 x 220	203,323	10	100	200
ABE6324	6,3 x 240	253,797	10	100	200



Blister

CODE	SIZE	€/BAG	PCS.	BAGS
BZABE3509	3,5 x 9,5	2,565	20	20
BZABE3513	3,5 x 13	2,565	20	20
BZABE4213	4,2 x 13	2,565	20	20
BZABE4216	4,2 x 16	2,565	20	20
BZABE4219	4,2 x 19	2,565	20	20
BZABE4225	4,2 x 25	2,565	10	20
BZABE4813	4,8 x 13	2,565	20	20
BZABE4816	4,8 x 16	2,565	20	20
BZABE4819	4,8 x 19	2,565	10	20
BZABE4825	4,8 x 25	2,565	10	20
BZABE4832	4,8 x 32	2,565	10	20
BZABE4838	4,8 x 38	2,565	10	20
BZABE5519	5,5 x 19	2,565	10	20
BZABE5522	5,5 x 22	2,565	10	20
BZABE5525	5,5 x 25	2,565	10	20
BZABE5532	5,5 x 32	2,565	10	20
BZABE5538	5,5 x 38	2,565	10	20
BZABE5550	5,5 x 50	2,565	10	20
BZABE6325	6,3 x 25	2,565	10	20
BZABE6332	6,3 x 32	2,565	10	20
BZABE6338	6,3 x 38	2,565	10	20
BZABE6350	6,3 x 50	2,565	5	20

Window Box

CODE	SIZE	€/BOX	PCS.	BOXES
VABE3509	3,5 x 9,5	6,358	225	8
VABE3513	3,5 x 13	6,659	200	8
VABE4213	4,2 x 13	6,637	150	8
VABE4216	4,2 x 16	7,261	150	8
VABE4219	4,2 x 19	8,567	150	8
VABE4225	4,2 x 25	4,984	75	8
VABE4232	4,2 x 32	5,888	75	8
VABE4813	4,8 x 13	8,912	150	8
VABE4816	4,8 x 16	9,843	150	8
VABE4819	4,8 x 19	10,728	150	8
VABE4825	4,8 x 25	12,104	150	8
VABE4832	4,8 x 32	10,055	110	8
VABE4838	4,8 x 38	8,877	85	8
VABE5519	5,5 x 19	11,330	125	8
VABE5522	5,5 x 22	11,910	125	8
VABE5525	5,5 x 25	13,136	125	8
VABE5532	5,5 x 32	10,351	85	8
VABE5538	5,5 x 38	10,843	80	8
VABE5550	5,5 x 50	9,824	60	8
VABE5563	5,5 x 63	7,890	40	8
VABE6319	6,3 x 19	13,610	100	8
VABE6325	6,3 x 25	13,221	90	8
VABE6332	6,3 x 32	12,163	70	8
VABE6338	6,3 x 38	11,277	60	8
VABE6350	6,3 x 50	9,161	40	8
VABE6363	6,3 x 63	7,008	25	8

DIN-7504-K A2

Screw. A2 Stainless steel



STAINLESS STEEL

Aluminum profile

CODE	SIZE	€/100			
ABEI4213	4,2 x 13	17,927	7	1.000	12.000
ABEI4216	4,2 x 16	20,113	7	1.000	8.000
ABEI4219	4,2 x 19	20,847	7	1.000	8.000
ABEI4813	4,8 x 13	25,360	8	1.000	8.000
ABEI4816	4,8 x 16	24,780	8	500	6.000
ABEI4819	4,8 x 19	26,817	8	500	6.000
ABEI4825	4,8 x 25	30,027	8	500	6.000
ABEI4832	4,8 x 32	35,707	8	500	3.000
ABEI5519	5,5 x 19	37,023	8	500	6.000
ABEI5522	5,5 x 22	39,500	8	500	4.000
ABEI5525	5,5 x 25	41,980	8	500	6.000
ABEI6319	6,3 x 19	56,113	10	500	3.000
ABEI6325	6,3 x 25	63,840	10	500	3.000

DIN-7504-K

Self-drilling screw with hexagonal head

METAL — Metal sheet — Metal sheet - heavy profiles — ZINC

CODE	SIZE	€/100			
ABE144219	4,2 x 19 P14	**10,393**	7	1.000	4.000
ABE144225	4,2 x 25 P14	**12,297**	7	500	3.000
ABE144816	4,8 x 16 P14	**9,987**	8	1.000	4.000
ABE144819	4,8 x 19 P14	**10,712**	8	1.000	4.000
ABE144825	4,8 x 25 P14	**11,853**	8	1.000	4.000
ABE144832	4,8 x 32 P14	**16,297**	8	500	3.000
ABE144838	4,8 x 38 P14	**17,893**	8	500	3.000
ABE145522	5,5 x 22 P14	**14,253**	8	1.000	4.000
ABE145532	5,5 x 32 P14	**16,100**	8	1.000	4.000
ABE164219	4,2 x 19 P16	**12,857**	7	1.000	4.000
ABE164816	4,8 x 16 P16	**11,660**	8	1.000	4.000
ABE164819	4,8 x 19 P16	**11,652**	8	1.000	3.000
ABE164825	4,8 x 25 P16	**12,327**	8	1.000	3.000
ABE164832	4,8 x 32 P16	**17,197**	8	500	3.000
ABE164838	4,8 x 38 P16	**18,623**	8	500	2.000
ABE165519	5,5 x 19 P16	**13,580**	8	1.000	3.000
ABE165522	5,5 x 22 P16	**12,983**	8	1.000	3.000
ABE165525	5,5 x 25 P16	**15,143**	8	1.000	3.000
ABE165532	5,5 x 32 P16	**15,900**	8	1.000	2.000
ABE165538	5,5 x 38 P16	**18,023**	8	1.000	2.000
ABE165550	5,5 x 50 P16	**20,437**	8	500	1.500
ABE165563	5,5 x 63 P16	**23,867**	8	250	1.500
ABE165575	5,5 x 75 P16	**28,480**	8	250	1.000
ABE166319	6,3 x 19 P16	**17,493**	10	500	3.000
ABE166325	6,3 x 25 P16	**17,741**	10	500	2.000
ABE166332	6,3 x 32 P16	**22,153**	10	500	2.000
ABE166338	6,3 x 38 P16	**23,620**	10	500	2.000
ABE166350	6,3 x 50 P16	**28,007**	10	500	1.000
ABE166363	6,3 x 63 P16	**31,360**	10	250	1.000
ABE166375	6,3 x 75 P16	**38,447**	10	250	750
ABE166380	6,3 x 80 P16	**41,593**	10	100	600
ABE166390	6,3 x 90 P16	**49,400**	10	100	600
ABE166310	6,3 x 100 P16	**51,573**	10	100	600
ABE166311	6,3 x 110 P16	**57,817**	10	100	600
ABE166312	6,3 x 120 P16	**68,367**	10	100	400
ABE166313	6,3 x 130 P16	**74,553**	10	100	400
ABE166314	6,3 x 140 P16	**81,217**	10	100	400

CODE	SIZE	€/100			
ABE184819	4,8 x 19 P18	**15,357**	8	500	3.000
ABE184825	4,8 x 25 P18	**16,297**	8	500	3.000
ABE184838	4,8 x 38 P18	**20,147**	8	500	2.000
ABE185522	5,5 x 22 P18	**15,773**	8	500	3.000
ABE185525	5,5 x 25 P18	**17,520**	8	500	3.000
ABE185532	5,5 x 32 P18	**18,920**	8	500	2.000
ABE185538	5,5 x 38 P18	**20,200**	8	500	2.000
ABE185550	5,5 x 50 P18	**26,743**	8	500	1.500
ABE185563	5,5 x 63 P18	**25,763**	8	250	1.000
ABE186319	6,3 x 19 P18	**19,597**	10	500	3.000
ABE186325	6,3 x 25 P18	**19,267**	10	500	2.000
ABE186332	6,3 x 32 P18	**23,987**	10	500	2.000
ABE186338	6,3 x 38 P18	**23,447**	10	250	1.500
ABE186350	6,3 x 50 P18	**27,823**	10	250	1.000
ABE186363	6,3 x 63 P18	**32,853**	10	250	1.000
ABE186375	6,3 x 75 P18	**37,117**	10	250	750
ABE186380	6,3 x 80 P18	**46,767**	10	100	600
ABE186390	6,3 x 90 P18	**44,443**	10	100	600
ABE186310	6,3 x 100 P18	**48,547**	10	100	400
ABE186311	6,3 x 110 P18	**60,703**	10	100	400
ABE186312	6,3 x 120 P18	**72,847**	10	100	400
ABE186313	6,3 x 130 P18	**91,483**	10	100	400
ABE186314	6,3 x 140 P18	**100,720**	10	100	400
ABE255522	5,5 x 22 P25	**19,927**	8	500	1.500
ABE255525	5,5 x 25 P25	**23,917**	8	500	1.500
ABE256325	6,3 x 25 P25	**25,187**	10	500	1.500
ABE256332	6,3 x 32 P25	**30,413**	10	500	1.000
ABE256338	6,3 x 38 P25	**33,763**	10	250	750
ABE256350	6,3 x 50 P25	**38,097**	10	250	750
ABE256363	6,3 x 63 P25	**43,063**	10	100	600
ABE256380	6,3 x 80 P25	**54,107**	10	100	300
ABE256390	6,3 x 90 P25	**55,947**	10	100	400
ABE256310	6,3 x 100 P25	**60,933**	10	100	400
ABE256311	6,3 x 110 P25	**67,783**	10	100	300
ABE256312	6,3 x 120 P25	**74,723**	10	100	300
ABE256313	6,3 x 130 P25	**85,977**	10	100	300
ABE256314	6,3 x 140 P25	**94,013**	10	100	200

DIN-7504-K + ARVUL

Screw with vulcanized EPDM-steel washer



P.160

Available in diferent colours

Available in diferent coatings. Ask for price and delivery time.



Blister

CODE	SIZE	€/BAG	PCS.	BAGS
BZABE144819	4,8 x 19 P14	**2,565**	18	10
BZABE144825	4,8 x 25 P14	**2,565**	18	10
BZABE164819	4,8 x 19 P16	**2,565**	18	10
BZABE165522	5,5 x 22 P16	**2,565**	15	10
BZABE165525	5,5 x 25 P16	**2,565**	15	10
BZABE165532	5,5 x 32 P16	**2,565**	12	10
BZABE165538	5,5 x 38 P16	**2,565**	12	10
BZABE165550	5,5 x 50 P16	**2,565**	10	10
BZABE166325	6,3 x 25 P16	**2,565**	10	10
BZABE166332	6,3 x 32 P16	**2,565**	8	10
BZABE166338	6,3 x 38 P16	**2,565**	8	10

Window Box

CODE	SIZE	€/BOX	PCS.	BOXES
VABE144819	4,8 x 19 P14	**13,048**	100	8
VABE144825	4,8 x 25 P14	**11,564**	80	8
VABE164819	4,8 x 19 P16	**9,532**	70	8
VABE165522	5,5 x 22 P16	**10,516**	70	8
VABE165525	5,5 x 25 P16	**10,914**	60	8
VABE165532	5,5 x 32 P16	**9,431**	50	8
VABE165538	5,5 x 38 P16	**9,604**	45	8
VABE165550	5,5 x 50 P16	**8,448**	35	8
VABE166325	6,3 x 25 P16	**10,263**	50	8
VABE166332	6,3 x 32 P16	**13,349**	50	8
VABE166338	6,3 x 38 P16	**11,379**	40	8

METAL — Metal sheet — Metal sheet - heavy profiles — ZINC

CODE	SIZE	€/JAR		PCS X JAR
ABE144819CP	4,8 x 19 P14	**139,268**	8	1.250
ABE164819CP	4,8 x 19 P16	**143,962**	8	1.250
ABE165522CP	5,5 x 22 P16	**168,822**	8	1.250
ABE166325CP	6,3 x 25 P16	**138,377**	10	750



DIN-7504-K CP + ARVUL

Plastic container



AUTO

Self-drilling screw for beam, hexagonal head

AUTO

Screw



Available in diferent coatings.
Ask for price and delivery time.

METAL — Metal sheet — Metal sheet - heavy profiles — I-beam — ZINC

CODE	SIZE	€/100		THICKNESS MAX. FIXTURE	DRILL CAPACITY		
AUT0532	5,5 x 32	**16,193**	8	16	4,00-12,00	500	3.000
AUT0538	5,5 x 38	**17,700**	8	22	4,00-12,00	500	3.000

AUTO + ARVUL

Screw with vulcanized EPDM-steel washer



Available in diferent coatings.
Ask for price and delivery time.

METAL — Metal sheet — Metal sheet - heavy profiles — I-beam — ATLANTIS — ZINC

CODE	SIZE	€/100		THICKNESS MAX. FIXTURE	DRILL CAPACITY		
AUT016532	5,5 x 32 P16	**20,030**	8	14	4,00-12,00	500	2.000
AUT016538	5,5 x 38 P16	**21,330**	8	20	4,00-12,00	500	2.000

ABE BIMETAL

Bimetal, stainless-steel, self-drilling screw with hexagonal head

ABE BIMETAL

Screw



METAL — Metal sheet — Metal sheet - heavy profiles — ATLANTIS — A2 INOX A

CODE	SIZE	€/100		DRILL CAPACITY		
BIE4825	4,8 x 25	**75,343**	8	1,75-4,40	500	6.000
BIE5525	5,5 x 25	**86,440**	8	1,75-5,25	500	6.000
BIE5532	5,5 x 32	**101,427**	8	1,75-5,25	500	3.000
BIE5538	5,5 x 38	**105,547**	8	1,75-5,25	500	3.000
BIE5550	5,5 x 50	**121,823**	8	1,75-5,25	500	2.000
BIE5558	5,5 x 58	**135,590**	8	1,75-5,25	250	1.500
BIE5565	5,5 x 65	**141,720**	8	1,75-5,25	250	1.500
BIE5580	5,5 x 80	**167,200**	8	1,75-5,25	250	1.000
BIE6325	6,3 x 25	**92,240**	10	2,50-6,00	500	3.000

ABE BIMETAL + ARVUL

Screw with vulcanized EPDM-steel washer



METAL — Metal sheet — Metal sheet - heavy profiles — ATLANTIS — A2 INOX A

CODE	SIZE	€/100		DRILL CAPACITY		
BIE164825	4,8 x 25 P16	**88,448**	8	1,75-4,40	500	2.000
BIE165525	5,5 x 25 P16	**102,467**	8	1,75-5,25	500	2.000
BIE165532	5,5 x 32 P16	**119,110**	8	1,75-5,25	500	2.000
BIE165538	5,5 x 38 P16	**122,609**	8	1,75-5,25	500	1.500
BIE165550	5,5 x 50 P16	**143,010**	8	1,75-5,25	500	1.500
BIE165558	5,5 x 58 P16	**153,868**	8	1,75-5,25	250	1.500
BIE165565	5,5 x 65 P16	**160,132**	8	1,75-5,25	250	1.500
BIE165580	5,5 x 80 P16	**186,347**	8	1,75-5,25	250	1.000
BIE166325	6,3 x 25 P16	**108,997**	10	2,50-6,00	500	2.000

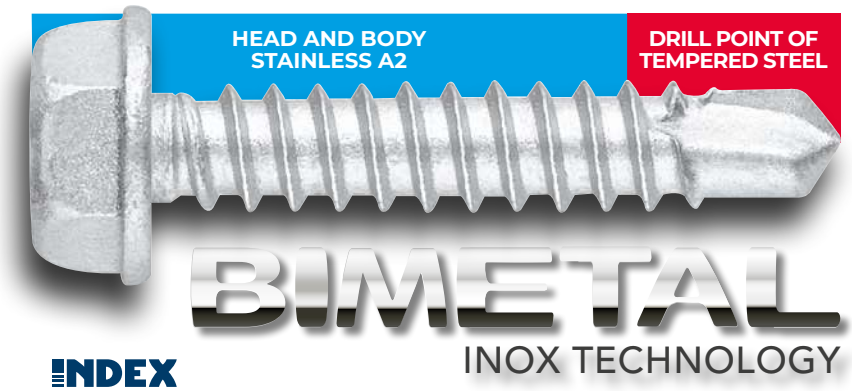

The benefits of a steel self-drilling screw with the anti-corrosion resistance of a stainless

ATLANTIS C3-H COATING

Bimetal, stainless steel, self-drilling screw for beam with hexagonal head

AUTO BIMETAL

METAL — Metal sheet · Metal sheet - heavy profiles · I-beam

CODE	SIZE	€/100		THICKNESS MAX. FIXTURE	DRILL CAPACITY		
BAUTO5540	5,5 x 40	**128,757**	8	10	4,00-12,00	500	3.000
BAUTO5550	5,5 x 50	**182,827**	8	20	4,00-12,00	500	3.000
BAUTO5565	5,5 x 65	**190,993**	8	35	4,00-12,00	250	1.500
BAUTO5580	5,5 x 80	**240,070**	8	50	4,00-12,00	250	1.000
BAUTO5510	5,5 x 100	**242,763**	8	70	4,00-12,00	100	600

AUTO BIMETAL

Screw



METAL — Metal sheet · Metal sheet - heavy profiles · I-beam

CODE	SIZE	€/100		THICKNESS MAX. FIXTURE	DRILL CAPACITY		
BAUTO165540	5,5 x 40 P16	**155,930**	8	8	4,00-12,00	500	1.500
BAUTO165550	5,5 x 50 P16	**210,793**	8	18	4,00-12,00	500	1.500
BAUTO165565	5,5 x 65 P16	**217,797**	8	33	4,00-12,00	250	1.500
BAUTO165580	5,5 x 80 P16	**255,990**	8	48	4,00-12,00	250	1.000
BAUTO165510	5,5 x 100 P16	**269,887**	8	68	4,00-12,00	100	600

AUTO BIMETAL + ARVUL

Screw with vulcanized EPDM-steel washer



Self-drilling screw with reduced drill point and 8 mm hexagonal head

DIN-7504-K RE

METAL — Metal sheet · Metal sheet - heavy profiles · Aluminium frames

CODE	SIZE	€/100			
ARE4816	4,8 x 16	**6,080**	8	500	6.000
ARE4819	4,8 x 19	**6,520**	8	500	6.000
ARE5522	5,5 x 22	**9,373**	8	500	4.000
ARE6320	6,3 x 20	**10,390**	8	500	3.000
ARE6325	6,3 x 25	**12,197**	8	500	3.000
ARE6332	6,3 x 32	**16,013**	8	500	3.000
ARE6338	6,3 x 38	**17,090**	8	500	3.000
ARE6350	6,3 x 50	**20,830**	8	250	1.500
ARE6363	6,3 x 63	**25,070**	8	250	1.500
ARE6380	6,3 x 80	**32,803**	8	250	1.000

DIN-7504-K RE

Screw



P.160

Available in diferent colours

Available in diferent coatings. Ask for price and delivery time.

DIN-7504-K RE

Self-drilling screw with reduced drill point and 8 mm hexagonal head

DIN-7504-K RE + ARVUL

Screw with vulcanized EPDM-steel washer



P.160
Available in diferent colours

Available in diferent coatings.
Ask for price and delivery time.

METAL — Metal sheet; Metal sheet - heavy profiles; Aluminium frames

CODE	SIZE	€/100			
ARE164816	4,8 x 16 P16	**15,070**	8	500	3.000
ARE164819	4,8 x 19 P16	**15,763**	8	500	3.000
ARE165522	5,5 x 22 P16	**17,820**	8	500	3.000
ARE166320	6,3 x 20 P16	**17,547**	8	500	3.000
ARE166325	6,3 x 25 P16	**19,163**	8	500	3.000
ARE166332	6,3 x 32 P16	**26,803**	8	500	2.000
ARE166338	6,3 x 38 P16	**25,993**	8	500	2.000
ARE166350	6,3 x 50 P16	**30,773**	8	250	1.500

For thicknesses less than 1.5 mm

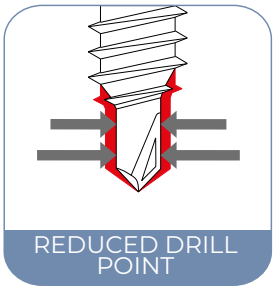



AUE

Self-tapping screw with hexagonal head

AUE

Screw



P.160
Available in diferent colours

Available in diferent coatings.
Ask for price and delivery time.

METAL — Metal sheet; Aluminium frames

CODE	SIZE	€/100			
AUE6319	6,3 x 19	**8,940**	10	500	3.000
AUE6325	6,3 x 25	**9,680**	10	500	3.000
AUE6332	6,3 x 32	**11,483**	10	500	2.000
AUE6340	6,3 x 40	**12,807**	10	500	2.000
AUE6350	6,3 x 50	**14,740**	10	500	1.500
AUE6360	6,3 x 60	**17,803**	10	250	1.000
AUE6380	6,3 x 80	**23,840**	10	250	1.000
AUE6310	6,3 x 100	**31,070**	10	250	750
AUE6311	6,3 x 110	**37,570**	10	250	750
AUE6312	6,3 x 120	**40,103**	10	250	750
AUE6313	6,3 x 130	**49,307**	10	250	750
AUE6314	6,3 x 140	**56,527**	10	250	500
AUE6315	6,3 x 150	**69,480**	10	100	400

AUE + ARVUL

Screw with vulcanized EPDM-steel washer



P.160
Available in diferent colours

Available in diferent coatings.
Ask for price and delivery time.

METAL — Metal sheet; Aluminium frames

CODE	SIZE	€/100			
AUE166319	6,3 x 19 P16	**15,953**	10	500	2.000
AUE166325	6,3 x 25 P16	**16,900**	10	500	2.000
AUE166332	6,3 x 32 P16	**18,747**	10	500	2.000
AUE166340	6,3 x 40 P16	**20,827**	10	500	1.500
AUE166350	6,3 x 50 P16	**23,227**	10	500	1.500
AUE166360	6,3 x 60 P16	**28,320**	10	250	1.000
AUE166380	6,3 x 80 P16	**36,137**	10	250	750
AUE186325	6,3 x 25 P18	**18,050**	10	500	2.000
AUE186332	6,3 x 32 P18	**20,707**	10	500	1.500
AUE186340	6,3 x 40 P18	**25,103**	10	500	1.500
AUE186350	6,3 x 50 P18	**25,430**	10	500	1.500
AUE186360	6,3 x 60 P18	**30,620**	10	250	1.000
AUE186380	6,3 x 80 P18	**39,693**	10	250	750
AUE186310	6,3 x 100 P18	**46,347**	10	250	750
AUE186311	6,3 x 110 P18	**52,520**	10	250	500
AUE186312	6,3 x 120 P18	**60,410**	10	100	400
AUE186313	6,3 x 130 P18	**70,613**	10	100	400
AUE186314	6,3 x 140 P18	**76,647**	10	100	400
AUE186315	6,3 x 150 P18	**78,507**	10	100	400
AUE256325	6,3 x 25 P25	**29,010**	10	500	1.500

Self-drilling screw with hexagonal head for sandwich panels

PS

PS 3

Standard drill point #3. Zinc plated



METAL — Metal sheet - heavy profiles — ZINC

CODE	SIZE	€/100		THICKNESS MAX. FIXTURE	DRILL CAPACITY		
PS55060	5,5 / 6,3 x 60	**19,497**	8	31 -45	1,50-6,00	500	1.500
PS55082	5,5 / 6,3 x 82	**26,503**	8	43 - 67	1,50-6,00	500	1.000
PS55098	5,5 / 6,3 x 98	**31,953**	8	54 - 83	1,50-6,00	500	1.000
PS55115	5,5 / 6,3 x 115	**36,380**	8	56 - 100	1,50-6,00	500	1.000
PS55130 *	5,5 / 6,3 x 130	**64,840**	8	66 - 115	1,50-6,00	200	400
PS55150 *	5,5 / 6,3 x 150	**85,763**	8	86 - 135	1,50-6,00	200	400
PS55180 *	5,5 / 6,3 x 180	**142,820**	8	116 - 165	1,50-6,00	200	400

* Available with steel-EPDM vulcanized washer

PS 3 + ARVUL

Standard drill point #3 with vulcanized EPDM-steel washer. Zinc plated



METAL — Metal sheet - heavy profiles — ATLANTIS — ZINC

CODE	SIZE	€/100		THICKNESS MAX. FIXTURE	DRILL CAPACITY		
PS1655060	5,5 / 6,3 x 60 P16	**25,613**	8	31 -45	1,50-6,00	500	1.000
PS1655082	5,5 / 6,3 x 82 P16	**32,017**	8	43 - 67	1,50-6,00	500	1.000
PS1655098	5,5 / 6,3 x 98 P16	**38,007**	8	54 - 83	1,50-6,00	500	1.000
PS1655115	5,5 / 6,3 x 115 P16	**43,943**	8	56 - 100	1,50-6,00	500	-

PS 3 + ARVUL A2

Standard drill point #3 with ATLANTIS C4-M coating and A2 stainless washer



METAL — Metal sheet - heavy profiles — ATLANTIS — A2 INOX

CODE	SIZE	€/100		THICKNESS MAX. FIXTURE	DRILL CAPACITY		
PS1955195	5,5 / 6,3 x 195 P19	**289,230**	8	130 - 185	1,50-6,00	200	400
PS1955230	5,5 / 6,3 x 230 P19	**406,007**	8	166 - 215	1,50-6,00	200	-

PS 5

Standard drill point #5. Zinc plated



METAL — Metal sheet - heavy profiles — I-beam — ZINC

CODE	SIZE	€/100		THICKNESS MAX. FIXTURE	DRILL CAPACITY		
PSL55075	5,5 / 6,3 x 75	**27,263**	8	33 - 60	6,00-12,00	500	1.500
PSL55085	5,5 / 6,3 x 85	**31,893**	8	38 - 70	6,00-12,00	500	1.000
PSL55105	5,5 / 6,3 x 105	**39,840**	8	48 - 90	6,00-12,00	500	1.000
PSL55130	5,5 / 6,3 x 130	**58,430**	8	63 - 115	6,00-12,00	250	750
PSL55150	5,5 / 6,3 x 150	**69,183**	8	83 - 135	6,00-12,00	250	750
PSL55175 *	5,5 / 6,3 x 175	**135,077**	8	108 - 160	6,00-12,00	200	400
PSL55200 *	5,5 / 6,3 x 200	**162,993**	8	133 - 185	6,00-12,00	200	400
PSL55230 *	5,5 / 6,3 x 230	**229,967**	8	163 - 215	6,00-12,00	200	400

* Available with steel-EPDM vulcanized washer

PS 5 + ARVUL

Standard drill point #5 with vulcanized EPDM-steel washer. Zinc plated



METAL — Metal sheet - heavy profiles — I-beam — ATLANTIS — ZINC

CODE	SIZE	€/100		THICKNESS MAX. FIXTURE	DRILL CAPACITY		
PSL1655075	5,5 / 6,3 x 75 P16	**33,170**	8	33 - 60	6,00-12,00	500	1.000
PSL1655085	5,5 / 6,3 x 85 P16	**38,430**	8	38 - 70	6,00-12,00	500	1.000
PSL1655105	5,5 / 6,3 x 105 P16	**46,370**	8	48 - 90	6,00-12,00	500	-
PSL1655130	5,5 / 6,3 x 130 P16	**65,540**	8	63 - 115	6,00-12,00	250	500
PSL1655150	5,5 / 6,3 x 150 P16	**76,293**	8	83 - 135	6,00-12,00	250	500

PS 5 + ARVUL A2

Standard drill point #5 with ATLANTIS C4-M coating and A2 stainless washer



METAL — Metal sheet - heavy profiles — I-beam — ATLANTIS — A2 INOX

CODE	SIZE	€/100		THICKNESS MAX. FIXTURE	DRILL CAPACITY		
PSL1955255	5,5 / 6,3 x 255 P19	**565,423**	8	170 - 210	6,00-12,00	200	-
PSL1955285	5,5 / 6,3 x 285 P19	**993,677**	8	200 - 250	6,00-12,00	200	-

FIBR

Self-drilling screw for fibre cement, assembled with umbrella washer



METAL

Metal sheet | Metal sheet - heavy profiles | I-beam

ZINC

CODE	SIZE	€/100		THICKNESS MAX. FIXTURE	DRILL CAPACITY	
FI63115	6,3 x 115	**87,723**	8	85	1,00-6,00	250
FI63125	6,3 x 125	**93,363**	8	95	1,00-6,00	250
FI63110	6,3 x 110	**98,370**	8	75	6,00-12,00	250
FI63120	6,3 x 120	**100,490**	8	85	6,00-12,00	250
FI63130	6,3 x 130	**106,973**	8	95	6,00-12,00	250
FI63150	6,3 x 150	**106,960**	8	115	6,00-12,00	250
FI63160	6,3 x 160	**132,547**	8	125	6,00-12,00	250

ARVUL

Vulcanized EPDM-steel washer

ARVUL

ATLANTIS C2-M coating



METAL

ATLANTIS

CODE	SIZE	€/100	WASHER INNER Ø		
ARANE14	P14	**4,363**	2,5	1.000	12.000
ARANE16	P16	**4,880**	2,7	1.000	6.000
ARANE18	P18	**6,213**	3,2	1.000	6.000
ARANE25	P25	**10,637**	3,3	500	3.000

Blister

CODE	SIZE	€/BAG	PCS.	BAGS
BZARANE14	P14	**2,029**	20	10
BZARANE16	P16	**2,029**	20	10
BZARANE18	P18	**2,029**	20	10

Window Box

CODE	SIZE	€/BOX	PCS.	BOXES
VARANE14	P14	**5,283**	100	8
VARANE16	P16	**5,860**	100	8
VARANE18	P18	**7,687**	100	8
VARANE25	P25	**13,314**	100	8

ARVUL A2

A2 Stainless steel



STAINLESS STEEL

A2 INOX

CODE	SIZE	€/100	WASHER INNER Ø		
ARINO14	P14	**12,053**	2,5	1.000	12.000
ARINO16	P16	**13,627**	2,7	1.000	6.000
ARINO18	P18	**17,147**	3,2	1.000	6.000
ARINO25	P25	**31,707**	3,3	500	3.000
ARINOM30	P30	**45,500**	6,3	500	1.500



* **ARINOM30:** Specially recommended for MTH-A2, 6

ATAP

Nylon cover cap in colours, for hexagonal-head screws



CODE		COLOR	€/100		
ATAPO08AR	8	RAL 1.001	**7,197**	1.000	2.000
ATAPO08RC	8	RAL 3.003	**7,197**	1.000	2.000
ATAPO08RT	8	RAL 3.011	**7,197**	1.000	2.000
ATAPO08VN	8	RAL 6.028	**7,197**	1.000	2.000
ATAPO08BP	8	RAL 9.010	**7,197**	1.000	2.000
ATAPO08NE	8	RAL 9.005	**7,197**	1.000	2.000
ATAPO08BO	8	RAL 9.002	**7,197**	1.000	2.000
ATAPO10AR	10	RAL 1.001	**7,197**	1.000	2.000
ATAPO10RC	10	RAL 3.003	**7,197**	1.000	2.000
ATAPO10RT	10	RAL 3.011	**7,197**	1.000	2.000
ATAPO10VN	10	RAL 6.028	**7,197**	1.000	2.000
ATAPO10BP	10	RAL 9.010	**7,197**	1.000	2.000
ATAPO10NE	10	RAL 9.005	**7,197**	1.000	2.000
ATAPO10BO	10	RAL 9.002	**7,197**	1.000	2.000



SELF-DRILLING, SELFTAPPING AND PVC SCREWS

DIN-7504-N Panhead self-drilling screw

DIN-7504-N HP Z

Zinc-plated. PH recess







Available in diferent coatings.
Ask for price and delivery time.

METAL



Metal sheet | Metal sheet - heavy profiles

CODE	SIZE	€/100		THICKNESS MAX. FIXTURE	DRILL CAPACITY		
ABR3509	3,5 x 9,5	1,770	PH2	2,8	0,70-2,25	1.000	24.000
ABR3511	3,5 x 11	2,063	PH2	4,2	0,70-2,25	1.000	24.000
ABR3513	3,5 x 13	2,150	PH2	6,2	0,70-2,25	1.000	24.000
ABR3516	3,5 x 16	2,297	PH2	9,2	0,70-2,25	1.000	16.000
ABR3519	3,5 x 19	2,457	PH2	12,1	0,70-2,25	1.000	12.000
ABR3522	3,5 x 22	2,750	PH2	15,1	0,70-2,25	1.000	12.000
ABR3525	3,5 x 25	3,030	PH2	18,1	0,70-2,25	500	12.000
ABR3532	3,5 x 32	3,797	PH2	25,1	0,70-2,25	500	6.000
ABR3913	3,9 x 13	2,577	PH2	5,8	0,70-2,40	1.000	16.000
ABR3916	3,9 x 16	2,770	PH2	8,8	0,70-2,40	1.000	12.000
ABR3919	3,9 x 19	3,080	PH2	11,7	0,70-2,40	1.000	12.000
ABR3925	3,9 x 25	3,723	PH2	17,7	0,70-2,40	500	8.000
ABR3932	3,9 x 32	4,480	PH2	24,5	0,70-2,40	500	6.000
ABR4213	4,2 x 13	2,740	PH2	4,3	1,75-3,00	1.000	12.000
ABR4216	4,2 x 16	3,000	PH2	7,3	1,75-3,00	1.000	12.000
ABR4219	4,2 x 19	3,397	PH2	10,3	1,75-3,00	1.000	12.000
ABR4222	4,2 x 22	3,863	PH2	13,3	1,75-3,00	500	8.000
ABR4225	4,2 x 25	4,010	PH2	17,7	1,75-3,00	500	6.000
ABR4232	4,2 x 32	4,700	PH2	24,5	1,75-3,00	500	6.000
ABR4238	4,2 x 38	5,523	PH2	30,5	1,75-3,00	500	6.000
ABR4250	4,2 x 50	6,920	PH2	41	1,75-3,00	500	3.000
ABR4813	4,8 x 13	3,883	PH2	3,7	1,75-4,40	1.000	8.000

CODE	SIZE	€/100		THICKNESS MAX. FIXTURE	DRILL CAPACITY		
ABR4816	4,8 x 16	4,230	PH2	5,5	1,75-4,40	1.000	8.000
ABR4819	4,8 x 19	4,667	PH2	10,3	1,75-4,40	1.000	8.000
ABR4822	4,8 x 22	5,417	PH2	11,7	1,75-4,40	500	6.000
ABR4825	4,8 x 25	5,523	PH2	14,7	1,75-4,40	500	6.000
ABR4832	4,8 x 32	6,317	PH2	21,5	1,75-4,40	500	6.000
ABR4838	4,8 x 38	7,293	PH2	27,5	1,75-4,40	500	3.000
ABR4845	4,8 x 45	8,480	PH2	34,5	1,75-4,40	500	3.000
ABR4850	4,8 x 50	9,537	PH2	39,5	1,75-4,40	500	3.000
ABR4860	4,8 x 60	12,743	PH2	49,5	1,75-4,40	500	2.000
ABR4880	4,8 x 80	16,640	PH2	69,5	1,75-4,40	250	1.500
ABR4890	4,8 x 90	26,210	PH2	79,5	1,75-4,40	100	1.200
ABR4810	4,8 x 100	29,577	PH2	89,5	1,75-4,40	100	1.200
ABR4811	4,8 x 110	30,590	PH2	-	1,75-4,40	100	1.200
ABR4812	4,8 x 120	31,510	PH2	-	1,75-4,40	100	1.200
ABR5519	5,5 x 19	6,440	PH3	8,7	1,75-5,25	500	6.000
ABR5522	5,5 x 22	6,943	PH3	11,7	1,75-5,25	500	6.000
ABR5525	5,5 x 25	7,217	PH3	14,7	1,75-5,25	500	4.000
ABR5532	5,5 x 32	8,593	PH3	21,5	1,75-5,25	500	3.000
ABR5538	5,5 x 38	9,667	PH3	27,5	1,75-5,25	500	3.000
ABR5545	5,5 x 45	10,850	PH3	34,5	1,75-5,25	500	3.000
ABR5560	5,5 x 60	15,163	PH3	49,5	1,75-5,25	250	1.500
ABR5573	5,5 x 73	18,287	PH3	62,5	1,75-5,25	250	1.500

Blister

CODE	SIZE	€/BAG	PCS.	BAGS
BZABR3509	3,5 x 9,5	2,565	40	15
BZABR3513	3,5 x 13	2,565	40	15
BZABR3516	3,5 x 16	2,565	40	15
BZABR4213	4,2 x 13	2,565	40	15
BZABR4216	4,2 x 16	2,565	40	15
BZABR4219	4,2 x 19	2,565	40	15
BZABR4225	4,2 x 25	2,565	20	15
BZABR4232	4,2 x 32	2,565	20	15
BZABR4816	4,8 x 16	2,565	35	15
BZABR4819	4,8 x 19	2,565	35	15
BZABR4825	4,8 x 25	2,565	20	15
BZABR4832	4,8 x 32	2,565	20	15
BZABR4838	4,8 x 38	2,565	20	15
BZABR4845	4,8 x 45	2,565	20	15
BZABR4850	4,8 x 50	2,565	20	15
BZABR4860	4,8 x 60	2,565	20	15

Window Box

CODE	SIZE	€/BOX	PCS.	BOXES
VABR3509	3,5 x 9,5	6,179	275	8
VABR3511	3,5 x 11	6,296	250	8
VABR3513	3,5 x 13	6,637	250	8
VABR3516	3,5 x 16	6,449	225	8
VABR3519	3,5 x 19	6,823	225	8
VABR3525	3,5 x 25	6,789	180	8
VABR3913	3,9 x 13	7,878	250	8
VABR3916	3,9 x 16	6,953	200	8
VABR3919	3,9 x 19	7,451	200	8
VABR3925	3,9 x 25	6,945	150	8
VABR3932	3,9 x 32	11,152	200	8
VABR4213	4,2 x 13	6,967	200	8
VABR4216	4,2 x 16	7,407	200	8
VABR4219	4,2 x 19	7,350	175	8
VABR4222	4,2 x 22	8,148	175	8
VABR4225	4,2 x 25	6,193	125	8
VABR4232	4,2 x 32	5,419	90	8
VABR4238	4,2 x 38	5,298	75	8
VABR4250	4,2 x 50	4,875	50	8
VABR4813	4,8 x 13	6,385	125	8
VABR4816	4,8 x 16	6,471	125	8
VABR4819	4,8 x 19	6,249	110	8
VABR4822	4,8 x 22	6,018	90	8
VABR4825	4,8 x 25	6,135	90	8
VABR4832	4,8 x 32	5,957	75	8
VABR4838	4,8 x 38	5,183	55	8
VABR4845	4,8 x 45	5,378	50	8
VABR4850	4,8 x 50	4,931	40	8
VABR4860	4,8 x 60	6,405	40	8
VABR4880	4,8 x 80	5,584	25	8
VABR5532	5,5 x 32	5,400	50	8

Panhead self-drilling screw DIN-7504-N

STAINLESS STEEL

Metal sheet | Metal sheet - heavy profiles | Aluminium frames | A2 INOX

DIN-7504-N HP A2

A2 Stainless steel. PH recess





CODE	SIZE	€/100		THICKNESS MAX. FIXTURE	DRILL CAPACITY		
ABRA23509	3,5 x 9,5	**11,723**	PH2	2,85	0,70-2,25	1.000	24.000
ABRA23513	3,5 x 13	**14,147**	PH2	6,2	0,70-2,25	500	12.000
ABRA23519	3,5 x 19	**17,333**	PH2	12,1	0,70-2,25	500	12.000
ABRA24213	4,2 x 13	**16,567**	PH2	4,3	1,75-3,00	500	12.000
ABRA24216	4,2 x 16	**18,560**	PH2	7,3	1,75-3,00	500	12.000
ABRA24219	4,2 x 19	**19,753**	PH2	10,3	1,75-3,00	500	12.000
ABRA24225	4,2 x 25	**20,747**	PH2	16,3	1,75-3,00	250	6.000
ABRA24816	4,8 x 16	**25,990**	PH2	5,5	1,75-4,40	250	6.000
ABRA24819	4,8 x 19	**25,460**	PH2	8,7	1,75-4,40	250	6.000
ABRA24825	4,8 x 25	**28,290**	PH2	14,7	1,75-4,40	250	6.000
ABRA24832	4,8 x 32	**33,113**	PH2	21,5	1,75-4,40	250	4.000
ABRA24838	4,8 x 38	**36,250**	PH2	27,5	1,75-4,40	250	3.000
ABRA24850	4,8 x 50	**42,743**	PH2	39,5	1,75-4,40	250	3.000

METAL

Metal sheet | Metal sheet - heavy profiles | BLACK

DIN-7504-N HP N

Black. PH recess





For other sizes, contact your sales person for term and price

CODE	SIZE	€/100		THICKNESS MAX. FIXTURE	DRILL CAPACITY		
NBR3509	3,5 x 9,5	**2,820**	PH2	2,85	0,70-2,25	1.000	24.000
NBR3513	3,5 x 13	**3,507**	PH2	6,2	0,70-2,25	1.000	24.000
NBR3516	3,5 x 16	**3,597**	PH2	9,2	0,70-2,25	1.000	16.000
NBR3519	3,5 x 19	**3,970**	PH2	12,1	0,70-2,25	1.000	12.000
NBR4213	4,2 x 13	**4,150**	PH2	4,3	1,75-3,00	1.000	12.000
NBR4216	4,2 x 16	**4,593**	PH2	7,3	1,75-3,00	1.000	12.000
NBR4219	4,2 x 19	**5,160**	PH2	10,3	1,75-3,00	1.000	12.000
NBR4225	4,2 x 25	**6,367**	PH2	16,3	1,75-3,00	500	6.000
NBR4232	4,2 x 32	**7,563**	PH2	23	1,75-3,00	500	6.000
NBR4238	4,2 x 38	**8,877**	PH2	29	1,75-3,00	500	6.000
NBR4816	4,8 x 16	**6,337**	PH2	5,5	1,75-4,40	1.000	8.000
NBR4819	4,8 x 19	**7,373**	PH2	8,7	1,75-4,40	1.000	8.000
NBR4825	4,8 x 25	**8,677**	PH2	14,7	1,75-4,40	500	6.000
NBR4832	4,8 x 32	**10,533**	PH2	21,5	1,75-4,40	500	6.000
NBR4838	4,8 x 38	**11,227**	PH2	27,5	1,75-4,40	500	3.000
NBR4845	4,8 x 45	**13,017**	PH2	34,5	1,75-4,40	500	3.000
NBR4850	4,8 x 50	**14,117**	PH2	39,5	1,75-4,40	500	3.000

METAL

Metal sheet | Metal sheet - heavy profiles | WHITE

DIN-7504-N HP B

White.PH recess





For other sizes, contact your sales person for term and price

CODE	SIZE	€/100		THICKNESS MAX. FIXTURE	DRILL CAPACITY		
ABR3509BLE	3,5 x 9,5	**2,103**	PH2	2,85	0,70-2,25	1.000	24.000
ABR3513BLE	3,5 x 13	**5,630**	PH2	6,2	0,70-2,25	1.000	24.000
ABR3516BLE	3,5 x 16	**6,337**	PH2	9,2	0,70-2,25	1.000	16.000
ABR4213BLE	4,2x 13	**7,367**	PH2	4,3	1,75-3,00	1.000	12.000
ABR4216BLE	4,2 x 16	**8,180**	PH2	7,3	1,75-3,00	1.000	12.000
ABR4219BLE	4,2 x 19	**8,213**	PH2	10,3	1,75-3,00	1.000	12.000
ABR4825BLE	4,8 x 25	**11,780**	PH2	14,7	1,75-4,40	500	6.000

DIN-7504-N Panhead self-drilling screw

DIN-7504-N HT

Zinc-plated. TX/OXBIT recess



FREE - 1 OXBIT bit in each box



METAL — Metal sheet, Metal sheet - heavy profiles — ZINC

CODE	SIZE	€/100		THICKNESS MAX. FIXTURE	DRILL CAPACITY		
ABRT3509	3,5 x 9,5	2,100	TX15/ OXBIT15	2,8	0,70-2,25	1.000	24.000
ABRT3513	3,5 x 13	2,457	TX15/ OXBIT15	6,2	0,70-2,25	1.000	24.000
ABRT3516	3,5 x 16	2,627	TX15/ OXBIT15	9,2	0,70-2,25	1.000	16.000
ABRT3519	3,5 x 19	2,800	TX15/ OXBIT15	12,1	0,70-2,25	1.000	12.000
ABRT3913	3,9 x 13	2,940	TX15/ OXBIT15	5,8	0,70-2,40	1.000	16.000
ABRT3916	3,9 x 16	3,163	TX15/ OXBIT15	8,8	0,70-2,40	1.000	12.000
ABRT3919	3,9 x 19	3,517	TX15/ OXBIT15	11,7	0,70-2,40	1.000	12.000
ABRT3925	3,9 x 25	4,323	TX15/ OXBIT15	17,7	0,70-2,40	500	8.000
ABRT4213	4,2 x 13	3,127	TX20/ OXBIT20	4,3	1,75-3,00	1.000	12.000
ABRT4216	4,2 x 16	3,423	TX20/ OXBIT20	7,3	1,75-3,00	1.000	12.000
ABRT4219	4,2 x 19	3,880	TX20/ OXBIT20	10,3	1,75-3,00	1.000	12.000
ABRT4225	4,2 x 25	4,583	TX20/ OXBIT20	17,7	1,75-3,00	500	6.000
ABRT4232	4,2 x 32	5,367	TX20/ OXBIT20	24,5	1,75-3,00	500	6.000
ABRT4238	4,2 x 38	6,307	TX20/ OXBIT20	30,5	1,75-3,00	500	6.000
ABRT4250	4,2 x 50	7,723	TX20/ OXBIT20	41	1,75-3,00	500	3.000
ABRT4813	4,8 x 13	4,337	TX25/ OXBIT25	3,7	1,75-4,40	1.000	8.000
ABRT4816	4,8 x 16	4,640	TX25/ OXBIT25	5,5	1,75-4,40	1.000	8.000
ABRT4819	4,8 x 19	5,120	TX25/ OXBIT25	10,3	1,75-4,40	1.000	8.000

CODE	SIZE	€/100		THICKNESS MAX. FIXTURE	DRILL CAPACITY		
ABRT4825	4,8 x 25	6,053	TX25/ OXBIT25	14,7	1,75-4,40	500	6.000
ABRT4832	4,8 x 32	7,050	TX25/ OXBIT25	21,5	1,75-4,40	500	6.000
ABRT4838	4,8 x 38	7,997	TX25/ OXBIT25	27,5	1,75-4,40	500	3.000
ABRT4845	4,8 x 45	9,203	TX25/ OXBIT25	34,5	1,75-4,40	500	3.000
ABRT4850	4,8 x 50	10,643	TX25/ OXBIT25	39,5	1,75-4,40	500	3.000
ABRT4860	4,8 x 60	14,220	TX25/ OXBIT25	49,5	1,75-4,40	500	2.000
ABRT4880	4,8 x 80	18,573	TX25/ OXBIT25	69,5	1,75-4,40	250	1.500
ABRT4890	4,8 x 90	29,257	TX25/ OXBIT25	79,5	1,75-4,40	100	1.200
ABRT4810	4,8 x 100	33,007	TX25/ OXBIT25	89,5	1,75-4,40	100	1.200
ABRT4811	4,8 x 110	34,140	TX25/ OXBIT25	-	1,75-4,40	100	1.200
ABRT4812	4,8 x 120	35,170	TX25/ OXBIT25	-	1,75-4,40	100	1.200
ABRT5519	5,5 x 19	7,187	TX25/ OXBIT25	8,7	1,75-5,25	500	6.000
ABRT5525	5,5 x 25	7,913	TX25/ OXBIT25	14,7	1,75-5,25	500	4.000
ABRT5532	5,5 x 32	9,600	TX25/ OXBIT25	21,5	1,75-5,25	500	3.000
ABRT5538	5,5 x 38	10,787	TX25/ OXBIT25	27,5	1,75-5,25	500	3.000
ABRT5560	5,5 x 60	16,927	TX25/ OXBIT25	49,5	1,75-5,25	250	1.500
ABRT5573	5,5 x 73	20,413	TX25/ OXBIT25	62,5	1,75-5,25	250	1.500

DIN-7504-N HC

Zinc-plated. Square recess



FREE - 1 bit inside each box

METAL — Metal sheet, Metal sheet - heavy profiles, Aluminium frames — ZINC

CODE	SIZE	€/100		THICKNESS MAX. FIXTURE	DRILL CAPACITY		
ABRC3509	3,5 x 9,5	1,827	PC1	2,85	0,70-2,25	1.000	24.000
ABRC3513	3,5 x 13	2,223	PC1	6,2	0,70-2,25	1.000	24.000
ABRC3516	3,5 x 16	2,367	PC1	9,2	0,70-2,25	1.000	16.000
ABRC3519	3,5 x 19	2,537	PC1	12,1	0,70-2,25	1.000	12.000
ABRC3913	3,9 x 13	2,660	PC1	5,8	0,70-2,40	1.000	16.000
ABRC3916	3,9 x 16	2,857	PC1	8,8	0,70-2,40	1.000	12.000
ABRC3919	3,9 x 19	3,177	PC1	11,7	0,70-2,40	1.000	12.000
ABRC3925	3,9 x 25	3,913	PC1	17,7	0,70-2,40	500	8.000
ABRC3938	3,9 x 38	4,327	PC1	30,5	0,70-2,40	500	6.000
ABRC4213	4,2 x 13	2,820	PC2	4,3	1,75-3,00	1.000	12.000
ABRC4216	4,2 x 16	3,093	PC2	7,3	1,75-3,00	1.000	12.000
ABRC4219	4,2 x 19	3,507	PC2	10,3	1,75-3,00	1.000	12.000
ABRC4225	4,2 x 25	4,137	PC2	16,3	1,75-3,00	500	6.000
ABRC4232	4,2 x 32	4,847	PC2	23	1,75-3,00	500	6.000

CODE	SIZE	€/100		THICKNESS MAX. FIXTURE	DRILL CAPACITY		
ABRC4238	4,2 x 38	5,693	PC2	29	1,75-3,00	500	6.000
ABRC4816	4,8 x 16	4,363	PC2	5,5	1,75-4,40	1.000	8.000
ABRC4819	4,8 x 19	4,810	PC2	8,7	1,75-4,40	1.000	8.000
ABRC4825	4,8 x 25	5,693	PC2	14,7	1,75-4,40	500	6.000
ABRC4832	4,8 x 32	6,633	PC2	21,5	1,75-4,40	500	6.000
ABRC4838	4,8 x 38	7,523	PC2	27,5	1,75-4,40	500	3.000
ABRC4845	4,8 x 45	8,750	PC2	34,5	1,75-4,40	500	3.000
ABRC4850	4,8 x 50	10,013	PC2	39,5	1,75-4,40	500	3.000
ABRC4860	4,8 x 60	13,377	PC2	49,5	1,75-4,40	500	2.000
ABRC4880	4,8 x 80	17,473	PC2	69,5	1,75-4,40	250	1.500
ABRC4890	4,8 x 90	27,520	PC2	79,5	1,75-4,40	100	1.200
ABRC4810	4,8 x 100	31,053	PC2	89,5	1,75-4,40	100	1.200
• ABRC5525	5,5 x 25	6,770	PC3	13	1,75-5,25	500	4.000
• ABRC5573	5,5 x 73	17,453	PC3	61	1,75-5,25	250	1.500

• Availability: end of stock

COLOUR LAQUERED SCREW FIXINGS
FURTHER INFORMATION ON PAGE 160
ONLY HEAD
COMPLETE SCREW

Countersunk head self-drilling screw DIN-7504-P

METAL — Metal sheet — Metal sheet - heavy profiles — ZINC

DIN-7504-P HP Z

Zinc-plated. PH recess





CODE	SIZE	€/100		THICKNESS MAX. FIXTURE	DRILL CAPACITY		
ABP3509	3,5 x 9,5	**2,447**	PH2	2,85	0,70-2,25	1.000	24.000
ABP3511	3,5 x 11	**1,947**	PH2	4,2	0,70-2,25	1.000	24.000
ABP3513	3,5 x 13	**1,973**	PH2	6,2	0,70-2,25	1.000	24.000
ABP3516	3,5 x 16	**2,173**	PH2	9,2	0,70-2,25	1.000	24.000
ABP3519	3,5 x 19	**2,587**	PH2	12,1	0,70-2,25	1.000	12.000
ABP3522	3,5 x 22	**2,940**	PH2	15,1	0,70-2,25	1.000	12.000
ABP3525	3,5 x 25	**2,933**	PH2	18,1	0,70-2,25	500	12.000
ABP3913	3,9 x 13	**2,263**	PH2	5,8	0,70-2,40	1.000	24.000
ABP3916	3,9 x 16	**2,517**	PH2	8,8	0,70-2,40	1.000	12.000
ABP3919	3,9 x 19	**2,853**	PH2	11,7	0,70-2,40	1.000	12.000
ABP3922	3,9 x 22	**3,203**	PH2	14,7	0,70-2,40	500	12.000
ABP3925	3,9 x 25	**3,217**	PH2	17,7	0,70-2,40	500	12.000
ABP3932	3,9 x 32	**3,870**	PH2	24,5	0,70-2,40	500	6.000
ABP3938	3,9 x 38	**4,610**	PH2	30,5	0,70-2,40	500	6.000
ABP4213	4,2 x 13	**2,590**	PH2	4,3	1,75-3,00	1.000	12.000
ABP4216	4,2 x 16	**2,853**	PH2	7,3	1,75-3,00	1.000	12.000
ABP4219	4,2 x 19	**3,150**	PH2	10,3	1,75-3,00	1.000	12.000
ABP4222	4,2 x 22	**3,480**	PH2	13,3	1,75-3,00	500	12.000
ABP4225	4,2 x 25	**3,870**	PH2	16,3	1,75-3,00	500	6.000
ABP4232	4,2 x 32	**4,543**	PH2	23	1,75-3,00	500	6.000
ABP4238	4,2 x 38	**5,310**	PH2	29	1,75-3,00	500	6.000
ABP4813	4,8 x 13	**3,563**	PH2	3,7	1,75-4,40	1.000	12.000
ABP4816	4,8 x 16	**3,790**	PH2	5,5	1,75-4,40	1.000	12.000
ABP4819	4,8 x 19	**4,077**	PH2	8,7	1,75-4,40	1.000	8.000
ABP4825	4,8 x 25	**4,640**	PH2	14,7	1,75-4,40	500	6.000
ABP4832	4,8 x 32	**6,013**	PH2	21,5	1,75-4,40	500	6.000
ABP4838	4,8 x 38	**6,943**	PH2	27,5	1,75-4,40	500	3.000
ABP4850	4,8 x 50	**8,713**	PH2	39,5	1,75-4,40	500	3.000
ABP5519	5,5 x 19	**5,793**	PH3	8,7	1,75-5,25	500	6.000
ABP5525	5,5 x 25	**6,620**	PH3	14,7	1,75-5,25	500	6.000
ABP5532	5,5 x 32	**8,347**	PH3	21,5	1,75-5,25	500	3.000
ABP5538	5,5 x 38	**9,253**	PH3	27,5	1,75-5,25	500	3.000
ABP5550	5,5 x 50	**11,900**	PH3	39,5	1,75-5,25	500	3.000

Blister

CODE	SIZE	€/BAG	PCS.	BAGS
BZABP3513	3,5 x 13	**2,565**	40	20
BZABP3516	3,5 x 16	**2,565**	40	20
BZABP4219	4,2 x 19	**2,565**	40	20
BZABP4225	4,2 x 25	**2,565**	20	20
BZABP4232	4,2 x 32	**2,565**	20	20

Window Box

CODE	SIZE	€/BOX	PCS.	BOXES
VABP3513	3,5 x 13	**6,183**	250	8
VABP3516	3,5 x 16	**6,148**	225	8
VABP3519	3,5 x 19	**6,423**	200	8
VABP3525	3,5 x 25	**6,637**	180	8
VABP3913	3,9 x 13	**5,705**	200	8
VABP3916	3,9 x 16	**6,416**	200	8
VABP3919	3,9 x 19	**6,219**	175	8
VABP3925	3,9 x 25	**6,215**	150	8
VABP3938	3,9 x 38	**5,844**	100	8
VABP4213	4,2 x 13	**5,834**	175	8
VABP4216	4,2 x 16	**6,219**	175	8
VABP4219	4,2 x 19	**6,732**	175	8
VABP4225	4,2 x 25	**6,066**	125	8
VABP4232	4,2 x 32	**5,117**	90	8
VABP4238	4,2 x 38	**4,986**	75	8
VABP4816	4,8 x 16	**6,112**	125	8
VABP4819	4,8 x 19	**5,374**	100	8
VABP4825	4,8 x 25	**5,156**	90	8
VABP4832	4,8 x 32	**5,726**	75	8
VABP4838	4,8 x 38	**6,671**	75	8
VABP5532	5,5 x 32	**5,147**	50	8

METAL — Metal sheet — Metal sheet - heavy profiles — BLACK

DIN-7504-P HP N

Black. PH recess





CODE	SIZE	€/100		THICKNESS MAX. FIXTURE	DRILL CAPACITY		
NBP3513	3,5 x 13	**3,100**	PH2	6,2	0,70-2,25	1.000	24.000
NBP3516	3,5 x 16	**3,383**	PH2	9,2	0,70-2,25	1.000	24.000
NBP3519	3,5 x 19	**3,823**	PH2	12,1	0,70-2,25	1.000	12.000
NBP3525	3,5 x 25	**4,840**	PH2	18,1	0,70-2,25	500	12.000
NBP4216	4,2 x 16	**4,213**	PH2	7,3	1,75-3,00	1.000	12.000
NBP4219	4,2 x 19	**5,140**	PH2	10,3	1,75-3,00	1.000	12.000
NBP4225	4,2 x 25	**5,837**	PH2	16,3	1,75-3,00	500	6.000
NBP4232	4,2 x 32	**6,817**	PH2	23	1,75-3,00	500	6.000
NBP4238	4,2 x 38	**9,117**	PH2	29	1,75-3,00	500	6.000
NBP4825	4,8 x 25	**8,483**	PH2	14,7	1,75-4,40	500	6.000
NBP4832	4,8 x 32	**10,233**	PH2	21,5	1,75-4,40	500	6.000
NBP4838	4,8 x 38	**11,783**	PH2	27,5	1,75-4,40	500	3.000
NBP4850	4,8 x 50	**13,883**	PH2	39,5	1,75-4,40	500	3.000

DIN-7504-P

Countersunk head self-drilling screw

DIN-7504-P HT Z

Zinc-plated. TX/OXBIT recess



FREE - 1 OXBIT bit in each box

METAL — Metal sheet — Metal sheet - heavy profiles — ZINC

CODE	SIZE	€/100		THICKNESS MAX. FIXTURE	DRILL CAPACITY		
ABPT3513	3,5 x 13	**2,287**	TX15/OXBIT15	6,2	0,70-2,25	1.000	24.000
ABPT3516	3,5 x 16	**2,527**	TX15/OXBIT15	9,2	0,70-2,25	1.000	24.000
ABPT3519	3,5 x 19	**3,000**	TX15/OXBIT15	12,1	0,70-2,25	1.000	12.000
ABPT3913	3,9 x 13	**2,637**	TX15/OXBIT15	5,8	0,70-2,40	1.000	24.000
ABPT3916	3,9 x 16	**2,923**	TX15/OXBIT15	8,8	0,70-2,40	1.000	12.000
ABPT4213	4,2 x 13	**2,960**	TX20/OXBIT20	4,3	1,75-3,00	1.000	12.000
ABPT4216	4,2 x 16	**3,320**	TX20/OXBIT20	7,3	1,75-3,00	1.000	12.000
ABPT4219	4,2 x 19	**3,597**	TX20/OXBIT20	10,3	1,75-3,00	1.000	12.000
ABPT4225	4,2 x 25	**4,493**	TX20/OXBIT20	16,3	1,75-3,00	500	6.000
ABPT4232	4,2 x 32	**5,193**	TX20/OXBIT20	23	1,75-3,00	500	6.000
ABPT4819	4,8 x 19	**4,657**	TX25/OXBIT25	8,7	1,75-4,40	1.000	8.000
ABPT4825	4,8 x 25	**5,293**	TX25/OXBIT25	14,7	1,75-4,40	500	6.000
ABPT4832	4,8 x 32	**6,987**	TX25/OXBIT25	21,5	1,75-4,40	500	6.000
ABPT4838	4,8 x 38	**8,070**	TX25/OXBIT25	27,5	1,75-4,40	500	3.000
ABPT4850	4,8 x 50	**10,127**	TX25/OXBIT25	39,5	1,75-4,40	500	3.000

ABA

Self-drilling screw with two wings drill, countersunk head and Ph recess. Zinc plated

ABA

Zinc-plated. PH recess



Available in diferent coatings.
Ask for price and delivery time.

METAL — Wood - metal — ZINC

CODE	SIZE	€/100		THICKNESS MAX. FIXTURE	DRILL CAPACITY		
ABA4832	4,8 x 32	**5,573**	PH2	16	1,75 - 4,00	500	6.000
ABA4838	4,8 x 38	**6,287**	PH2	22	1,75 - 4,00	500	6.000
ABA4845	4,8 x 45	**7,247**	PH2	29	1,75 - 4,00	500	3.000
ABA4850	4,8 x 50	**8,460**	PH2	34	1,75 - 4,00	500	3.000
ABA5538	5,5 x 38	**9,627**	PH2	19	1,75 - 5,00	500	3.000
ABA5545	5,5 x 45	**9,793**	PH2	26	1,75 - 5,00	500	3.000
ABA5555	5,5 x 55	**11,693**	PH2	36	1,75 - 5,00	500	3.000
ABA5565	5,5 x 65	**14,197**	PH2	46	1,75 - 5,00	500	2.000
ABA6360	6,3 x 60	**18,540**	PH2	40	2,50 - 6,00	250	1.500
ABA6370	6,3 x 70	**21,100**	PH2	50	2,50 - 6,00	250	1.500
ABA6385	6,3 x 85	**25,327**	PH2	65	2,50 - 6,00	250	1.000

ATA

Zinc-plated. TX recess



Available in diferent coatings.
Ask for price and delivery time.

METAL — Wood - metal — ZINC

CODE	SIZE	€/100		THICKNESS MAX. FIXTURE	DRILL CAPACITY		
ATA4832	4,8 x 32	**5,850**	TX25	16	1,75 - 4,00	500	6.000
ATA4838	4,8 x 38	**6,597**	TX25	22	1,75 - 4,00	500	6.000
ATA4845	4,8 x 45	**7,603**	TX25	29	1,75 - 4,00	500	3.000
ATA4850	4,8 x 50	**8,877**	TX25	34	1,75 - 4,00	500	3.000
ATA5538	5,5 x 38	**10,100**	TX25	19	1,75 - 5,00	500	3.000
ATA5545	5,5 x 45	**10,283**	TX25	26	1,75 - 5,00	500	3.000
ATA5550	5,5 x 50	**11,987**	TX25	31	1,75 - 5,00	500	3.000
ATA5555	5,5 x 55	**12,270**	TX25	36	1,75 - 5,00	500	2.000
ATA5565	5,5 x 65	**14,903**	TX25	46	1,75 - 5,00	500	2.000
ATA6350	6,3 x 50	**17,513**	TX30	30	2,50 - 6,00	500	2.000
ATA6360	6,3 x 60	**19,460**	TX30	40	2,50 - 6,00	250	1.500
ATA6370	6,3 x 70	**22,150**	TX30	50	2,50 - 6,00	250	1.500
ATA6385	6,3 x 85	**26,587**	TX30	65	2,50 - 6,00	250	1.000
ATA6310	6,3 x 100	**38,307**	TX30	80	2,50 - 6,00	250	750

RS

Self-drilling screw, blind-rivet head and PH recess

RS

Zinc plated



PATENTED

Available in diferent coatings.
Ask for price and delivery time.

METAL — Metal sheet — Metal sheet - heavy profiles — Aluminium frames — ZINC

CODE	SIZE	€/100		THICKNESS MAX. FIXTURE	DRILL CAPACITY		
RSZ3509	3,5 x 9	**3,990**	PH2	2,8	0,75 - 2,25	500	22.500
RSZ3513	3,5 x 13	**4,367**	PH2	6,2	0,75 - 2,25	500	22.500
RSZ3516	3,5 x 16	**4,827**	PH2	9,2	0,75 - 2,25	500	22.500
RSZ4213	4,2 x 13	**5,597**	PH2	4,3	1,75 - 3	500	22.500
RSZ4216	4,2 x 16	**5,830**	PH2	7,3	1,75 - 3	500	12.000
RSZ4219	4,2 x 19	**6,713**	PH2	10,3	1,75 - 3	500	12.000
RSZ4225	4,2 x 25	**8,723**	PH2	16,3	1,75 - 3	250	6.000
RSZ4232	4,2 x 32	**9,120**	PH2	23	1,75 - 3	250	6.000
RSZ4813	4,8 x 13	**8,383**	PH2	3,7	1,75 - 4,4	500	12.000
RSZ4816	4,8 x 16	**8,627**	PH2	5,5	1,75 - 4,4	250	11.250
RSZ4819	4,8 x 19	**9,780**	PH2	8,7	1,75 - 4,4	250	11.250
RSZ4825	4,8 x 25	**11,873**	PH2	14,7	1,75 - 4,4	250	6.000
RSZ4832	4,8 x 32	**12,660**	PH2	21,5	1,75 - 4,4	250	3.000
RSZ4838	4,8 x 38	**14,413**	PH2	27,5	1,75 - 4,4	250	3.000

Self-drilling screw, blind-rivet head and PH recess — RS

STAINLESS STEEL

Metal sheet · Metal sheet - heavy profiles · Aluminium frames · A2 INOX

CODE	SIZE	€/100	RECESS	THICKNESS MAX. FIXTURE		
RSA23509	3,5 x 9,5	**17,757**	PH2	2,8	500	22.500
RSA24213	4,2 x 13	**25,577**	PH2	4,3	500	22.500
RSA24216	4,2 x 16	**27,243**	PH2	7,3	500	12.000
RSA24219	4,2 x 19	**28,893**	PH2	10,3	500	12.000
RSA24816	4,8 x 16	**35,750**	PH2	5,5	250	11.250
RSA24819	4,8 x 19	**38,310**	PH2	8,7	250	11.250
RSA24825	4,8 x 25	**43,217**	PH2	14,7	250	6.000

RS-A2 NEW

Stainless Steel A2



PATENTED

Extra low head self-drilling screw and Ph recess — BCP

METAL

Metal sheet · Metal sheet - heavy profiles · Aluminium frames · ZINC

CODE	SIZE	€/100		THICKNESS MAX. FIXTURE	DRILL CAPACITY		
BCPZ4214	4,2 x 14	**2,637**	PH2	6	0,70-2,00	500	12.000
BCPZ4223	4,2 x 23	**3,900**	PH2	15	0,70-2,00	500	12.000

BCP Z

Zinc-plated. PH recess



Available in diferent coatings.
Ask for price and delivery time.

STAINLESS STEEL

Metal sheet · Metal sheet - heavy profiles · Aluminium frames · A2 INOX

CODE		SIZE	€/100		THICKNESS MAX. FIXTURE	DRILL CAPACITY		
BCPA24214		4,2 x 14	**24,470**	PH2	6	0,70-2,00	500	12.000
BCPA24223	NEW	4,2 x 23	**33,773**	PH2	6	-	500	12.000

BCP A2

A2 Stainless steel. PH recess



METAL

Metal sheet · Metal sheet - heavy profiles · Aluminium frames · BLACK

CODE	SIZE	€/100		THICKNESS MAX. FIXTURE	DRILL CAPACITY		
BCPN4214	4,2 x 14	**3,970**	PH2	6	0,70-2,00	500	12.000
BCPN4223	4,2 x 23	**5,870**	PH2	15	0,70-2,00	500	12.000

BCP N

Black. PH recess



METAL

Metal sheet · Metal sheet - heavy profiles · Aluminium frames · WHITE

CODE	SIZE	€/100		THICKNESS MAX. FIXTURE	DRILL CAPACITY		
BCPB4214	4,2 x 14	**6,050**	PH2	6	0,70-2,00	500	12.000
BCPB4223	4,2 x 23	**9,117**	PH2	15	0,70-2,00	500	12.000

BCP B

White.PH recess



METAL

Metal sheet · Metal sheet - heavy profiles · Aluminium frames · WHITE

CODE	SIZE	€/100		THICKNESS MAX. FIXTURE	DRILL CAPACITY		
BCPZ4214BL	4,2 x 14	**10,803**	PH2	6	0,70-2,00	500	22.500
BCPZ4223BL	4,2 x 23	**13,557**	PH2	15	0,70-2,00	500	12.000

BCP CB

White lacquered head. PH recess



TAE

Extra low panhead self-drilling screw, Ph recess and stamped washer

TAEZ

Zinc-plated. TX recess



Available in diferent coatings.
Ask for price and delivery time.

METAL — Metal sheet — Metal sheet - heavy profiles — ZINC

CODE	SIZE	€/100		THICKNESS MAX. FIXTURE	DRILL CAPACITY		
TAEZ4213	4,2 x 13	**4,640**	PH2	4,3	0,75 - 2,50	500	12.000
TAEZ4216	4,2 x 16	**5,123**	PH2	7,3	0,75 - 2,50	500	8.000
TAEZ4219	4,2 x 19	**5,713**	PH2	10,3	0,75 - 2,50	500	6.000
TAEZ4225	4,2 x 25	**5,847**	PH2	16,3	0,75 - 2,50	500	6.000
TAEZ4232	4,2 x 32	**6,710**	PH2	23	0,75 - 2,50	500	6.000

TAEN

Black. PH recess



METAL — Metal sheet — Metal sheet - heavy profiles — BLACK

CODE	SIZE	€/100		THICKNESS MAX. FIXTURE	DRILL CAPACITY		
TAEN4213	4,2 x 13	**7,977**	PH2	4,3	0,75 - 2,50	500	12.000
TAEN4216	4,2 x 16	**8,523**	PH2	7,3	0,75 - 2,50	500	8.000
TAEN4219	4,2 x 19	**10,397**	PH2	10,3	0,75 - 2,50	500	6.000
TAEN4225	4,2 x 25	**12,373**	PH2	16,3	0,75 - 2,50	500	6.000
TAEN4232	4,2 x 32	**14,140**	PH2	23	0,75 - 2,50	500	6.000

DIN-7981 HP

Panhead self-tapping screw

DIN-7981 HP Z

Zinc-plated. PH recess



P.160
Available in
diferent colours

Available in diferent coatings.
Ask for price and delivery time.

METAL — Metal sheet — Metal sheet - heavy profiles — Aluminium frames — ZINC

CODE	SIZE	€/100			
T8129006	2,9 x 6,5	**1,529**	PH1	1.000	45.000
T8129009	2,9 x 9,5	**1,583**	PH1	1.000	30.000
T8129013	2,9 x 13	**1,598**	PH1	1.000	24.000
T8129016	2,9 x 16	**1,787**	PH1	1.000	24.000
T8129019	2,9 x 19	**1,937**	PH1	1.000	24.000
T8129022	2,9 x 22	**2,216**	PH1	1.000	12.000
T8129025	2,9 x 25	**2,497**	PH1	500	12.000
T8135006	3,5 x 6,5	**1,597**	PH2	1.000	24.000
T8135009	3,5 x 9,5	**1,635**	PH2	1.000	24.000
T8135013	3,5 x 13	**1,950**	PH2	500	15.000
T8135016	3,5 x 16	**2,262**	PH2	500	12.000
T8135019	3,5 x 19	**2,460**	PH2	500	12.000
T8135025	3,5 x 25	**3,163**	PH2	250	6.000
T8135032	3,5 x 32	**3,770**	PH2	250	6.000
T8139009	3,9 x 9,5	**1,967**	PH2	500	15.000
T8139013	3,9 x 13	**2,382**	PH2	500	12.000
T8139016	3,9 x 16	**2,590**	PH2	500	12.000
T8139019	3,9 x 19	**2,963**	PH2	500	12.000
T8139022	3,9 x 22	**3,300**	PH2	250	6.000
T8139025	3,9 x 25	**3,655**	PH2	250	6.000
T8139032	3,9 x 32	**4,130**	PH2	250	6.000
T8139038	3,9 x 38	**4,833**	PH2	250	6.000
T8139045	3,9 x 45	**5,823**	PH2	250	3.000
T8139050	3,9 x 50	**6,463**	PH2	250	3.000
T8142009	4,2 x 9,5	**2,470**	PH2	500	12.000
T8142013	4,2 x 13	**2,663**	PH2	500	12.000
T8142016	4,2 x 16	**3,201**	PH2	500	12.000
T8142019	4,2 x 19	**3,237**	PH2	500	8.000
T8142022	4,2 x 22	**4,019**	PH2	250	6.000
T8142025	4,2 x 25	**4,037**	PH2	250	6.000
T8142032	4,2 x 32	**4,723**	PH2	250	6.000
T8142038	4,2 x 38	**5,527**	PH2	250	3.000
T8142045	4,2 x 45	**6,327**	PH2	250	3.000
T8142050	4,2 x 50	**6,687**	PH2	250	3.000
T8142060	4,2 x 60	**9,017**	PH2	250	3.000
T8142070	4,2 x 70	**10,127**	PH2	250	1.500
T8142080	4,2 x 80	**12,057**	PH2	250	1.500
T8142090	4,2 x 90	**16,388**	PH2	250	1.500
T8148009	4,8 x 9,5	**3,520**	PH2	500	12.000
T8148013	4,8 x 13	**3,591**	PH2	500	8.000
T8148016	4,8 x 16	**4,021**	PH2	250	6.000
T8148019	4,8 x 19	**4,800**	PH2	250	6.000
T8148022	4,8 x 22	**5,245**	PH2	250	6.000

CODE	SIZE	€/100			
T8148025	4,8 x 25	**5,510**	PH2	250	6.000
T8148032	4,8 x 32	**6,182**	PH2	250	4.000
T8148038	4,8 x 38	**7,247**	PH2	250	3.000
T8148045	4,8 x 45	**8,210**	PH2	250	3.000
T8148050	4,8 x 50	**8,933**	PH2	250	3.000
T8148060	4,8 x 60	**11,253**	PH2	250	1.500
T8148070	4,8 x 70	**13,377**	PH2	100	1.200
T8148080	4,8 x 80	**16,423**	PH2	100	1.200
T8148090	4,8 x 90	**19,027**	PH2	100	1.200
T8148100	4,8 x 100	**20,700**	PH2	100	1.200
T8148110	4,8 x 110	**25,973**	PH2	100	1.200
T8148120	4,8 x 120	**30,667**	PH2	100	1.200
T8155013	5,5 x 13	**5,383**	PH3	250	6.000
T8155016	5,5 x 16	**5,758**	PH3	250	6.000
T8155019	5,5 x 19	**6,023**	PH3	250	6.000
T8155022	5,5 x 22	**6,980**	PH3	250	4.000
T8155025	5,5 x 25	**7,197**	PH3	250	4.000
T8155032	5,5 x 32	**8,427**	PH3	250	3.000
T8155038	5,5 x 38	**9,413**	PH3	250	3.000
T8155045	5,5 x 45	**10,777**	PH3	250	3.000
T8155050	5,5 x 50	**11,777**	PH3	250	1.500
T8155060	5,5 x 60	**14,630**	PH3	100	1.200
T8155070	5,5 x 70	**16,243**	PH3	100	1.200
T8155080	5,5 x 80	**20,250**	PH3	100	1.200
T8155090	5,5 x 90	**23,277**	PH3	100	1.200
T8155100	5,5 x 100	**27,200**	PH3	100	1.200
T8155110	5,5 x 110	**32,947**	PH3	100	1.200
T8155120	5,5 x 120	**39,368**	PH3	100	1.200
T8163016	6,3 x 16	**7,676**	PH3	250	4.000
T8163019	6,3 x 19	**8,180**	PH3	250	3.000
T8163022	6,3 x 22	**8,770**	PH3	250	3.000
T8163025	6,3 x 25	**9,350**	PH3	250	3.000
T8163032	6,3 x 32	**11,703**	PH3	250	3.000
T8163038	6,3 x 38	**13,233**	PH3	250	1.500
T8163045	6,3 x 45	**15,487**	PH3	250	1.500
T8163050	6,3 x 50	**16,913**	PH3	250	1.500
T8163060	6,3 x 60	**19,537**	PH3	100	1.200
T8163070	6,3 x 70	**22,223**	PH3	100	1.200
T8163080	6,3 x 80	**27,490**	PH3	100	1.200
T8163090	6,3 x 90	**35,213**	PH3	50	600
T8163100	6,3 x 100	**40,727**	PH3	50	600
T8163110	6,3 x 110	**44,670**	PH3	50	600
T8163120	6,3 x 120	**47,923**	PH3	50	600

BLISTER and WINDOW BOX
Next page

Panhead self-tapping screw

DIN-7981 HP

DIN-7981 HP Z

Zinc-plated. PH recess



P.160

Available in
diferent colours

Available in diferent coatings.
Ask for price and delivery time.

PROFESSIONAL BOX
Previous page

Blister

CODE	SIZE	€/BAG	PCS.	BAGS
BZT8135009	3,5 x 9,5	**2,029**	40	20
BZT8135013	3,5 x 13	**2,029**	20	20
BZT8135016	3,5 x 16	**2,029**	20	20
BZT8135019	3,5 x 19	**2,029**	20	20
BZT8139013	3,9 x 13	**2,029**	20	20
BZT8139016	3,9 x 16	**2,029**	20	20
BZT8139019	3,9 x 19	**2,029**	20	20
BZT8139025	3,9 x 25	**2,029**	10	20
BZT8139032	3,9 x 32	**2,029**	10	20
BZT8142009	4,2 x 9,5	**2,029**	20	20
BZT8142013	4,2 x 13	**2,029**	20	20
BZT8142016	4,2 x 16	**2,029**	20	20
BZT8142019	4,2 x 19	**2,029**	20	20
BZT8142025	4,2 x 25	**2,029**	10	20
BZT8142032	4,2 x 32	**2,029**	10	20
BZT8142038	4,2 x 38	**2,029**	10	20
BZT8148016	4,8 x 16	**2,029**	10	20
BZT8148019	4,8 x 19	**2,029**	10	20
BZT8148025	4,8 x 25	**2,029**	10	20
BZT8148032	4,8 x 32	**2,029**	10	20
BZT8148038	4,8 x 38	**2,029**	10	20
BZT8148050	4,8 x 50	**2,029**	10	20
BZT8148060	4,8 x 60	**2,029**	10	20
BZT8155025	5,5 x 25	**2,029**	10	20
BZT8155032	5,5 x 32	**2,029**	10	20
BZT8155038	5,5 x 38	**2,029**	10	20
BZT8155050	5,5 x 50	**2,029**	10	20

Window Box

CODE	SIZE	€/BOX	PCS.	BOXES
VT8135009	3,5 x 9,5	**5,842**	250	8
VT8135013	3,5 x 13	**5,738**	200	8
VT8135016	3,5 x 16	**6,324**	200	8
VT8135019	3,5 x 19	**6,884**	200	8
VT8135025	3,5 x 25	**9,144**	200	8
VT8139009	3,9 x 9,5	**6,062**	200	8
VT8139013	3,9 x 13	**6,777**	200	8
VT8139016	3,9 x 16	**7,458**	200	8
VT8139019	3,9 x 19	**6,549**	150	8
VT8139022	3,9 x 22	**5,200**	100	8
VT8139025	3,9 x 25	**5,445**	100	8
VT8142009	4,2 x 9,5	**7,301**	200	8
VT8142013	4,2 x 13	**7,426**	200	8
VT8142016	4,2 x 16	**8,853**	200	8
VT8142019	4,2 x 19	**7,031**	150	8
VT8142022	4,2 x 22	**5,817**	100	8
VT8142025	4,2 x 25	**5,624**	100	8
VT8142032	4,2 x 32	**6,635**	100	8
VT8142038	4,2 x 38	**5,861**	75	8
VT8142050	4,2 x 50	**5,144**	50	8
VT8148009	4,8 x 9,5	**7,152**	150	8
VT8148013	4,8 x 13	**7,449**	150	8
VT8148016	4,8 x 16	**5,597**	100	8
VT8148019	4,8 x 19	**6,362**	100	8
VT8148025	4,8 x 25	**7,559**	100	8
VT8148032	4,8 x 32	**8,297**	100	8
VT8148038	4,8 x 38	**10,487**	100	8
VT8148045	4,8 x 45	**8,441**	70	8
VT8148050	4,8 x 50	**6,463**	50	8
VT8148060	4,8 x 60	**8,138**	50	8
VT8148070	4,8 x 70	**7,746**	40	8
VT8148080	4,8 x 80	**6,192**	25	8
VT8155019	5,5 x 19	**8,594**	100	8
VT8155025	5,5 x 25	**9,222**	90	8
VT8155032	5,5 x 32	**11,836**	100	8
VT8155038	5,5 x 38	**10,133**	75	8

DIN-7981 HP B

White. PH recess



METAL — Metal sheet · Metal sheet - heavy profiles · Aluminium frames

CODE	SIZE	€/100			
T813509BLE	3,5 x 9,5	**4,480**	PH2	1.000	24.000
T814213BLE	4,2 x 13	**7,123**	PH2	500	12.000
T814225BLE	4,2 x 25	**11,160**	PH2	250	6.000

DIN-7981 HP N

Black. PH recess



METAL — Metal sheet · Metal sheet - heavy profiles · Aluminium frames

CODE	SIZE	€/100			
TZN812909	2,9 x 9,5	**2,307**	PH1	1.000	30.000
TZN813513	3,5 x 13	**3,047**	PH2	500	15.000
TZN813516	3,5 x 16	**3,727**	PH2	500	12.000
TZN813519	3,5 x 19	**4,230**	PH2	500	12.000
TZN813525	3,5 x 25	**5,753**	PH2	250	6.000
TZN814216	4,2 x 16	**4,870**	PH2	500	12.000
TZN814219	4,2 x 19	**5,273**	PH2	500	8.000
TZN814225	4,2 x 25	**6,023**	PH2	250	6.000
TZN814232	4,2 x 32	**8,307**	PH2	250	6.000
TZN814238	4,2 x 38	**9,407**	PH2	250	3.000
TZN814816	4,8 x 16	**6,787**	PH2	250	6.000
TZN814819	4,8 x 19	**7,483**	PH2	250	6.000
TZN814822	4,8 x 22	**7,957**	PH2	250	6.000
TZN814825	4,8 x 25	**7,893**	PH2	250	6.000
TZN814838	4,8 x 38	**11,613**	PH2	250	3.000
TZN814850	4,8 x 50	**16,537**	PH2	250	3.000

DIN-7982 HP Countersunk head self tapping screw

DIN-7982 HP Z

Zinc-plated. PH recess



P.160
Available in
diferent colours

Available in diferent coatings.
Ask for price and delivery time.

METAL

Metal sheet | Metal sheet - heavy profiles | Aluminium frames | ZINC

CODE	SIZE	€/100			
T8229006	2,9 x 6,5	**1,576**	PH1	1.000	45.000
T8229009	2,9 x 9,5	**1,450**	PH1	1.000	45.000
T8229013	2,9 x 13	**1,463**	PH1	1.000	45.000
T8229016	2,9 x 16	**1,510**	PH1	1.000	24.000
T8229019	2,9 x 19	**1,833**	PH1	1.000	24.000
T8229022	2,9 x 22	**1,853**	PH1	1.000	24.000
T8229025	2,9 x 25	**2,317**	PH1	500	12.000
T8235009	3,5 x 9,5	**1,623**	PH2	1.000	24.000
T8235013	3,5 x 13	**1,820**	PH2	500	22.500
T8235016	3,5 x 16	**2,046**	PH2	500	22.500
T8235019	3,5 x 19	**2,263**	PH2	500	12.000
T8235022	3,5 x 22	**2,517**	PH2	500	12.000
T8235025	3,5 x 25	**3,083**	PH2	250	11.250
T8235032	3,5 x 32	**3,670**	PH2	250	6.000
T8235038	3,5 x 38	**4,157**	PH2	250	6.000
T8239009	3,9 x 9,5	**1,950**	PH2	500	22.500
T8239013	3,9 x 13	**2,128**	PH2	500	12.000
T8239016	3,9 x 16	**2,413**	PH2	500	12.000
T8239019	3,9 x 19	**2,663**	PH2	500	12.000
T8239022	3,9 x 22	**3,310**	PH2	250	6.000
T8239025	3,9 x 25	**3,603**	PH2	250	6.000
T8239032	3,9 x 32	**4,367**	PH2	250	6.000
T8239038	3,9 x 38	**4,773**	PH2	250	6.000
T8239045	3,9 x 45	**5,427**	PH2	250	3.000
T8239050	3,9 x 50	**6,367**	PH2	250	3.000
T8242013	4,2 x 13	**2,337**	PH2	500	15.000
T8242016	4,2 x 16	**2,593**	PH2	500	12.000
T8242019	4,2 x 19	**3,163**	PH2	500	12.000
T8242022	4,2 x 22	**3,653**	PH2	250	11.250
T8242025	4,2 x 25	**3,931**	PH2	250	6.000
T8242032	4,2 x 32	**4,613**	PH2	250	6.000
T8242038	4,2 x 38	**5,443**	PH2	250	6.000
T8242045	4,2 x 45	**6,291**	PH2	250	3.000

CODE	SIZE	€/100			
T8242050	4,2 x 50	**7,033**	PH2	250	3.000
T8242060	4,2 x 60	**8,720**	PH2	250	3.000
T8242070	4,2 x 70	**10,333**	PH2	250	3.000
T8248013	4,8 x 13	**3,137**	PH2	500	12.000
T8248016	4,8 x 16	**3,738**	PH2	250	11.250
T8248019	4,8 x 19	**4,465**	PH2	250	6.000
T8248022	4,8 x 22	**4,713**	PH2	250	6.000
T8248025	4,8 x 25	**5,347**	PH2	250	6.000
T8248032	4,8 x 32	**5,970**	PH2	250	6.000
T8248038	4,8 x 38	**7,183**	PH2	250	3.000
T8248045	4,8 x 45	**8,110**	PH2	250	3.000
T8248050	4,8 x 50	**9,690**	PH2	250	3.000
T8248060	4,8 x 60	**11,033**	PH2	250	1.500
T8248070	4,8 x 70	**13,743**	PH2	100	2.400
T8255013	5,5 x 13	**4,403**	PH3	250	7.500
T8255016	5,5 x 16	**4,937**	PH3	250	6.000
T8255019	5,5 x 19	**5,670**	PH3	250	6.000
T8255022	5,5 x 22	**6,603**	PH3	250	6.000
T8255025	5,5 x 25	**6,970**	PH3	250	6.000
T8255032	5,5 x 32	**8,053**	PH3	250	3.000
T8255038	5,5 x 38	**9,150**	PH3	250	3.000
T8255045	5,5 x 45	**10,677**	PH3	250	3.000
T8255050	5,5 x 50	**13,347**	PH3	250	1.500
T8255060	5,5 x 60	**15,183**	PH3	100	1.200
T8255070	5,5 x 70	**17,077**	PH3	100	1.200
T8263025	6,3 x 25	**9,920**	PH3	250	3.000
T8263032	6,3 x 32	**12,283**	PH3	250	3.000
T8263038	6,3 x 38	**12,683**	PH3	250	3.000
T8263045	6,3 x 45	**12,903**	PH3	250	1.500
T8263050	6,3 x 50	**15,473**	PH3	250	1.500
T8263060	6,3 x 60	**21,610**	PH3	100	1.200
T8263070	6,3 x 70	**22,600**	PH3	100	1.200

Blister

CODE	SIZE	€/BAG	PCS.	BAGS
BZT8242019	4,2 x 19	**2,029**	20	20
BZT8242025	4,2 x 25	**2,029**	10	20
BZT8248025	4,8 x 25	**2,029**	10	20
BZT8248038	4,8 x 38	**2,029**	10	20

Window Box

CODE	SIZE	€/BOX	PCS.	BOXES
VT8235009	3,5 x 9,5	**5,756**	250	8
VT8235013	3,5 x 13	**5,005**	200	8
VT8235016	3,5 x 16	**5,497**	200	8
VT8235019	3,5 x 19	**6,090**	200	8
VT8235025	3,5 x 25	**4,133**	100	8
VT8239016	3,9 x 16	**6,452**	200	8
VT8239019	3,9 x 19	**7,079**	200	8
VT8239022	3,9 x 22	**4,912**	100	8
VT8239025	3,9 x 25	**5,237**	100	8
VT8242016	4,2 x 16	**6,939**	200	8
VT8242019	4,2 x 19	**7,743**	200	8
VT8242025	4,2 x 25	**5,182**	100	8
VT8242032	4,2 x 32	**6,009**	100	8
VT8248019	4,8 x 19	**5,646**	100	8
VT8248025	4,8 x 25	**7,063**	100	8
VT8248032	4,8 x 32	**7,301**	95	8
VT8248038	4,8 x 38	**7,531**	80	8
VT8255032	5,5 x 32	**8,229**	75	8
VT8255038	5,5 x 38	**8,557**	70	8

Extra low head self-tapping screw CP

METAL

Metal sheet | Metal sheet - heavy profiles | Aluminium frames

CP-Z

Zinc-plated. Ph recess.

CODE	SIZE	€/100		THICKNESS MAX. FIXTURE		
TCPZ4213	4,2 x 13	**2,433**	PH2	6	500	12.000
TCPZ4222	4,2 x 22	**3,497**	PH2	15	500	12.000
TCPZ4232	4,2 x 32	**4,660**	PH2	25	500	6.000



Available in diferent coatings.
Ask for price and delivery time.

STAINLESS STEEL

Metal sheet | Metal sheet - heavy profiles | Aluminium frames

CP-A2

A2 Stainless steel. PH recess

CODE	SIZE	€/100		THICKNESS MAX. FIXTURE		
TCPA24213	4,2 x 13	**8,980**	PH2	6	500	12.000
TCPA24222	4,2 x 22	**17,420**	PH2	15	500	12.000
TCPA24232	4,2 x 32	**22,313**	PH2	25	500	6.000



METAL

Metal sheet | Metal sheet - heavy profiles | Aluminium frames

CP-B

White. Ph recess.

CODE	SIZE	€/100		THICKNESS MAX. FIXTURE		
TCPB4213	4,2 x 13	**6,090**	PH2	6	500	12.000
TCPB4222	4,2 x 22	**9,380**	PH2	15	500	12.000
TCPB4232	4,2 x 32	**12,697**	PH2	25	500	6.000

METAL

Metal sheet | Metal sheet - heavy profiles | Aluminium frames

CP-N

Black. Ph recess.

CODE	SIZE	€/100		THICKNESS MAX. FIXTURE		
TCPN4213	4,2 x 13	**3,733**	PH2	6	500	12.000
TCPN4222	4,2 x 22	**5,617**	PH2	15	500	12.000
TCPN4232	4,2 x 32	**7,787**	PH2	25	500	6.000





T-CO

Color lacquered screws

PAINTED SCREW (FULL)



DIAMETER	LENGTH	MINIMUM QUANTITY
Min. 2,9 mm - Max. 5,5 mm	Min. 6,5 mm - Max. 32 mm	15 Kgs (*)

(*) Per size and colour

Available colours

RAL 3005	Burgundy red	RAL 9005	Black
RAL 5009	Blue	RAL 9010	White
RAL 6005	Moss green		



PAINTED SCREW (HEAD ONLY)



DIAMETER	LENGTH	MINIMUM QUANTITY
Min. 3,9 mm - Max. 6,3 mm	Min. 13 mm - Max. 90 mm	(*)

(*) Ask for minimun quantity

Available colours

RAL 1000	Bidasoa cream	RAL 7016	Anthracite grey
RAL 1001	Sand	RAL 7022	Umbra grey
RAL 1007	Copper	RAL 7024	Graphite grey
RAL 1011	Brown beige	RAL 7032	Pebble grey
RAL 1015	Ivory	RAL 7033	Cement grey
RAL 3002	Carmine red	RAL 7034	Yellow grey
RAL 3003	Coral red	RAL 7035	Grey
RAL 3004	Purple red	RAL 8003	Clay brown
RAL 3005	Burgundy red	RAL 8004	Copper brown
RAL 3009	Oxide red	RAL 8012	Red brown
RAL 3011	Tile red	RAL 8014	Sepia brown
RAL 3020	Traffic red	RAL 8017	Chocolate brown
RAL 5002	Ultramarine blue	RAL 8019	Grey brown
RAL 5003	Saphire blue	RAL 8025	Pale brown
RAL 5005	Signal blue	RAL 9002	Blue Pyrenean white
RAL 5008	Grey blue	RAL 9003	Signal white
RAL 5009	Blue	RAL 9005	Black
RAL 5010	Gentian blue	RAL 9006	Metallic grey
RAL 5011	Steel blue	RAL 9007	Grey aluminium
RAL 5019	Lagoon blue	RAL 9010	White
RAL 6005	Moss green	RAL 9011	Graphite black
RAL 6021	Light green	RAL 9016	Traffic white
RAL 6028	Navarre green	RAL 9018	Oyster white
RAL 7011	Iron grey		

We offer a wide range of screws, which can be painted on demand in any of the colours available.

142 DIN-7504-K



145 DIN-7504-K RE



146 AUE



151 DIN-7504-N HP



156 DIN-7981 HP



158 DIN-7982 HP



Screws for PVC carpentry

PVC

METAL | PVC frames | ZINC

PVC-10 Z

Zinc-plated, head diameter 7,5mm



CODE	SIZE	€/100			
P103925Z	3,9 x 25	**3,293**	PH2	1.000	12.000
P103930Z	3,9 x 30	**4,047**	PH2	1.000	12.000
P103938Z	3,9 x 38	**4,393**	PH2	500	6.000
P103945Z	3,9 x 45	**5,673**	PH2	500	3.000

Available in diferent coatings.
Ask for price and delivery time.

METAL | PVC frames | YELLOW

PVC-20 B

Yellow zinc-plated, head diameter 7 mm



CODE	SIZE	€/100			
P204325	4,3 x 25	**3,507**	PH2	1.000	12.000
P204330	4,3 x 30	**3,817**	PH2	1.000	6.000
P204338	4,3 x 38	**4,787**	PH2	500	6.000
P204345	4,3 x 45	**5,417**	PH2	500	3.000
P204355	4,3 x 55	**6,600**	PH2	500	3.000

METAL | PVC frames | ZINC

PVC-20 Z

Zinc-plated, head diameter 7 mm



CODE	SIZE	€/100			
P204316Z	4,3 x 16	**2,730**	PH2	1.000	24.000
P204319Z	4,3 x 19	**2,967**	PH2	1.000	12.000
P204322Z	4,3 x 22	**3,027**	PH2	1.000	12.000
P204325Z	4,3 x 25	**3,507**	PH2	1.000	12.000
P204330Z	4,3 x 30	**3,817**	PH2	1.000	6.000
P204338Z	4,3 x 38	**4,787**	PH2	500	6.000
P204345Z	4,3 x 45	**5,407**	PH2	500	3.000
P204355Z	4,3 x 55	**6,600**	PH2	500	3.000

Available in diferent coatings.
Ask for price and delivery time.

METAL | PVC frames | YELLOW

PVC-30

Zinc Plated. Repair screw, head diamemter 7,5 mm



CODE	SIZE	€/100			
P304825	4,8 x 25	**6,493**	PH2	500	6.000
P304838	4,8 x 38	**9,177**	PH2	500	6.000

METAL | PVC frames | YELLOW

PVC-40 B

Yellow zinc-plated, drill point



CODE	SIZE	€/100			
P403916	3,9 x 16	**3,233**	PH2	1.000	16.000
P403919	3,9 x 19	**3,457**	PH2	1.000	12.000
P403925	3,9 x 25	**3,977**	PH2	1.000	12.000
P403932	3,9 x 32	**4,997**	PH2	1.000	6.000
P403938	3,9 x 38	**5,607**	PH2	500	6.000

PVC

Screws for PVC carpentry

PVC-40 Z

Zinc-plated, drill point



Available in diferent coatings.
Ask for price and delivery time.

METAL | PVC frames | ZINC

CODE	SIZE	€/100			
P403913Z	3,9 x 13	**2,477**	PH2	1.000	24.000
P403916Z	3,9 x 16	**3,247**	PH2	1.000	16.000
P403919Z	3,9 x 19	**3,467**	PH2	1.000	12.000
P403925Z	3,9 x 25	**4,040**	PH2	1.000	12.000
P403932Z	3,9 x 32	**4,900**	PH2	1.000	6.000
P403938Z	3,9 x 38	**5,523**	PH2	500	6.000

PVC-50 B

Yellow zinc-plated, metric thread, drill point



METAL | PVC frames | B YELLOW

CODE	SIZE	€/100			
P50M416	M4 x 16	**3,177**	PH2	1.000	16.000
P50M419	M4 x 19	**3,863**	PH2	1.000	12.000
P50M425	M4 x 25	**4,570**	PH2	1.000	12.000
P50M432	M4 x 32	**5,160**	PH2	1.000	6.000
P50M438	M4 x 38	**6,310**	PH2	500	6.000

PVC-50 Z

Zinc-plated, metric thread, drill point



Available in diferent coatings.
Ask for price and delivery time.

METAL | PVC frames | ZINC

CODE	SIZE	€/100			
P50M413Z	M4 x 13	**2,963**	PH2	1.000	24.000
P50M416Z	M4 x 16	**3,177**	PH2	1.000	16.000
P50M419Z	M4 x 19	**3,843**	PH2	1.000	12.000
P50M425Z	M4 x 25	**4,570**	PH2	1.000	12.000
P50M432Z	M4 x 32	**5,160**	PH2	1.000	6.000

PVC-70

Yellow zinc-plated, special head for cap



METAL | PVC frames | B YELLOW

CODE	SIZE	€/100			
P704855	4,8 x 55	**11,223**	PH2	500	3.000
P704865	4,8 x 65	**14,797**	PH2	500	2.000
P704880	4,8 x 80	**18,663**	PH2	250	1.500
P704895	4,8 x 95	**26,513**	PH2	250	1.500

PVC-70 TP

Black and white nylon cap for PVC-70 screws



METAL | PVC frames | Ny NYLON

CODE	DIAMETER	COLOR	€/100		
P70TPBL	13		**3,920**	1.000	24.000
P70TPNG	13		**3,920**	1.000	24.000

PVC-90

Yellow zinc plated. Low panhead with washer



METAL | PVC frames | B YELLOW

CODE	SIZE	€/100			
P903510	3,5 x 10	**3,820**	PH2	1.000	24.000
P904017	4 x 17	**5,013**	PH2	1.000	12.000

Screws for PVC carpentry

PVC

METAL | PVC frames | ZINC

CODE	SIZE	€/100			
P100VEK	VEKAPLAST 4,8 x 10	**20,447**	PH2	500	6.000

PVC-VEK

VEKAPLAST. Special head



Available in diferent coatings.
Ask for price and delivery time.

METAL | PVC frames | YELLOW

CODE	SIZE	€/100			
P100VEK13	VEKAPLAST 4 x 10	**18,930**	PH2	500	12.000

PVC-VEK 13

VEKAPLAST. Special head



METAL | PVC frames | YELLOW

CODE	SIZE	€/100			
P100VEK10	VEKAPLAST 4 x 10	**16,940**	PH2	500	

PVC-VEK 10

VEKAPLAST. Special head



METAL | PVC frames | ZINC

CODE	SIZE	€/100			
P100KOM10	KOMMERLING 5,5 x 10	**20,963**	PH2	500	6.000

PVC-KOM 10

KOMMERLING. Special head



Available in diferent coatings.
Ask for price and delivery time.



WOOD SCREWS

TEX

High-performance chipboard screw

TEX-BP

Yellow zinc-plated.
PZ recess





WOOD


Wood panel


Thin wood


Pinewood


Hardwood

CODE	SIZE	€/100		MIN. ORDER QTY.		
•TEXBP25010	2,5 x 10	1,290	PZ1	2.000	1.000	45.000
•TEXBP25012	2,5 x 12	1,347	PZ1	2.000	1.000	45.000
•TEXBP25016	2,5 x 16	1,513	PZ1	2.000	1.000	45.000
TEXBP25020	2,5 x 20	1,677	PZ1	2.000	1.000	24.000
TEXBP25025	2,5 x 25	1,867	PZ1	2.000	1.000	24.000
•TEXBP30010	3 x 10	1,533	PZ1	2.000	1.000	45.000
•TEXBP30012	3 x 12	1,620	PZ1	2.000	1.000	45.000
•TEXBP30015	3 x 15	1,753	PZ1	2.000	1.000	24.000
•TEXBP30016	3 x 16	1,790	PZ1	2.000	1.000	24.000
•TEXBP30020	3 x 20	1,977	PZ1	2.000	1.000	24.000
TEXBP30025	3 x 25	2,043	PZ1	2.000	1.000	24.000
TEXBP30030	3 x 30	2,757	PZ1	2.000	1.000	12.000
TEXBP30035	3 x 35	3,183	PZ1	2.000	1.000	12.000
TEXBP30040	3 x 40	3,843	PZ1	2.000	1.000	6.000
TEXBP30045	3 x 45	4,193	PZ1	1.000	500	6.000
•TEXBP35010	3,5 x 10	1,687	PZ2	2.000	1.000	24.000
•TEXBP35012	3,5 x 12	1,820	PZ2	2.000	1.000	24.000
•TEXBP35015	3,5 x 15	1,940	PZ2	2.000	1.000	24.000
•TEXBP35016	3,5 x 16	2,110	PZ2	2.000	1.000	24.000
•TEXBP35020	3,5 x 20	2,303	PZ2	2.000	1.000	24.000
TEXBP35025	3,5 x 25	2,663	PZ2	2.000	1.000	12.000
TEXBP35030	3,5 x 30	3,077	PZ2	2.000	1.000	12.000
TEXBP35035	3,5 x 35	3,860	PZ2	2.000	1.000	12.000
TEXBP35040	3,5 x 40	3,997	PZ2	1.000	500	6.000
TEXBP35045	3,5 x 45	5,583	PZ2	1.000	500	6.000
TEXBP35050	3,5 x 50	6,773	PZ2	1.000	500	6.000
•TEXBP40012	4 x 12	2,250	PZ2	2.000	1.000	24.000
•TEXBP40015	4 x 15	2,467	PZ2	2.000	1.000	24.000
•TEXBP40016	4 x 16	2,407	PZ2	2.000	1.000	24.000
•TEXBP40020	4 x 20	2,757	PZ2	2.000	1.000	12.000
•TEXBP40025	4 x 25	3,240	PZ2	2.000	1.000	12.000
TEXBP40030	4 x 30	3,693	PZ2	2.000	1.000	6.000
TEXBP40035	4 x 35	4,077	PZ2	1.000	500	6.000
TEXBP40040	4 x 40	4,467	PZ2	1.000	500	3.000
TEXBP40045	4 x 45	5,573	PZ2	1.000	500	3.000
TEXBP40050	4 x 50	5,603	PZ2	1.000	500	3.000
TEXBP40055	4 x 55	7,730	PZ2	500	250	1.500

CODE	SIZE	€/100		MIN. ORDER QTY.		
TEXBP40060	4 x 60	8,373	PZ2	500	250	3.000
TEXBP40070	4 x 70	9,473	PZ2	500	250	1.500
TEXBP40080	4 x 80	11,093	PZ2	500	250	1.500
•TEXBP45016	4,5 x 16	3,077	PZ2	2.000	1.000	12.000
•TEXBP45020	4,5 x 20	3,530	PZ2	2.000	1.000	12.000
•TEXBP45025	4,5 x 25	4,110	PZ2	2.000	1.000	12.000
•TEXBP45030	4,5 x 30	4,463	PZ2	1.000	500	6.000
TEXBP45035	4,5 x 35	5,250	PZ2	1.000	500	6.000
TEXBP45040	4,5 x 40	5,570	PZ2	1.000	500	3.000
TEXBP45045	4,5 x 45	6,643	PZ2	500	250	3.000
TEXBP45050	4,5 x 50	6,953	PZ2	500	250	3.000
TEXBP45060	4,5 x 60	9,553	PZ2	500	250	1.500
TEXBP45070	4,5 x 70	12,577	PZ2	500	250	1.500
TEXBP45080	4,5 x 80	15,423	PZ2	200	100	1.200
•TEXBP50025	5 x 25	5,530	PZ2	2.000	1.000	6.000
•TEXBP50030	5 x 30	5,783	PZ2	1.000	500	6.000
TEXBP50035	5 x 35	6,190	PZ2	1.000	500	6.000
TEXBP50040	5 x 40	6,790	PZ2	1.000	500	6.000
TEXBP50045	5 x 45	7,887	PZ2	500	250	3.000
TEXBP50050	5 x 50	8,467	PZ2	500	250	3.000
TEXBP50060	5 x 60	10,537	PZ2	500	250	1.500
TEXBP50070	5 x 70	12,367	PZ2	400	200	1.200
TEXBP50080	5 x 80	16,473	PZ2	200	100	1.200
TEXBP50090	5 x 90	16,937	PZ2	200	100	1.200
TEXBP50100	5 x 100	22,467	PZ2	200	100	1.200
TEXBP50110	5 x 110	25,417	PZ2	200	100	1.200
TEXBP50120	5 x 120	28,813	PZ2	200	100	1.200
•TEXBP60040	6 x 40	12,940	PZ3	500	250	3.000
•TEXBP60045	6 x 45	13,780	PZ3	500	250	3.000
•TEXBP60050	6 x 50	15,370	PZ3	500	250	1.500
TEXBP60060	6 x 60	16,783	PZ3	500	250	1.500
TEXBP60070	6 x 70	18,580	PZ3	200	100	1.200
TEXBP60080	6 x 80	23,433	PZ3	200	100	1.200
TEXBP60090	6 x 90	27,530	PZ3	200	100	600
TEXBP60100	6 x 100	27,783	PZ3	200	100	600
TEXBP60110	6 x 110	37,347	PZ3	200	100	600
TEXBP60120	6 x 120	41,860	PZ3	200	100	600

• Sizes without CE

Blister

CODE	SIZE	€/BAG	PCS.	BAGS
BZTXBP30016	3 x 16	2,565	40	20
BZTXBP30020	3 x 20	2,565	40	20
BZTXBP30025	3 x 25	2,565	40	20
BZTXBP30030	3 x 30	2,565	40	20
BZTXBP35016	3,5 x 16	2,565	40	20
BZTXBP35020	3,5 x 20	2,565	40	20
BZTXBP35025	3,5 x 25	2,565	40	20
BZTXBP35030	3,5 x 30	2,565	40	20
BZTXBP35035	3,5 x 35	2,565	20	20
BZTXBP35040	3,5 x 40	2,565	20	20
BZTXBP35050	3,5 x 50	2,565	20	20
BZTXBP40025	4 x 25	2,565	40	20
BZTXBP40030	4 x 30	2,565	20	20
BZTXBP40035	4 x 35	2,565	20	20
BZTXBP40040	4 x 40	2,565	20	20
BZTXBP40045	4 x 45	2,565	20	20
BZTXBP40050	4 x 50	2,565	10	20
BZTXBP40060	4 x 60	2,565	10	20
BZTXBP45030	4,5 x 30	2,565	20	20
BZTXBP45035	4,5 x 35	2,565	20	20
BZTXBP45040	4,5 x 40	2,565	20	20
BZTXBP45045	4,5 x 45	2,565	10	20
BZTXBP45050	4,5 x 50	2,565	10	20
BZTXBP45060	4,5 x 60	2,565	10	20
BZTXBP45070	4,5 x 70	2,565	10	20
BZTXBP50030	5 x 30	2,565	10	20
BZTXBP50035	5 x 35	2,565	10	20
BZTXBP50040	5 x 40	2,565	10	20
BZTXBP50050	5 x 50	2,565	10	20
BZTXBP50060	5 x 60	2,565	10	20
BZTXBP50070	5 x 70	2,565	4	20
BZTXBP50080	5 x 80	2,565	4	20
BZTXBP60050	6 x 50	2,565	10	20
BZTXBP60060	6 x 60	2,565	10	20
BZTXBP60070	6 x 70	2,565	4	20
BZTXBP60080	6 x 80	2,565	4	20

Window Box

CODE	SIZE	€/BOX	PCS.	BOXES
VTEXBP30016	3 x 16	4,758	200	8
VTEXBP30020	3 x 20	5,266	200	8
VTEXBP30025	3 x 25	5,318	200	8
VTEXBP30030	3 x 30	6,060	170	8
VTEXBP30040	3 x 40	5,960	120	8
VTEXBP35016	3,5 x 16	5,623	200	8
VTEXBP35020	3,5 x 20	6,131	200	8
VTEXBP35025	3,5 x 25	6,017	170	8
VTEXBP35030	3,5 x 30	6,144	150	8
VTEXBP35035	3,5 x 35	5,147	100	8
VTEXBP35040	3,5 x 40	3,873	75	8
VTEXBP35050	3,5 x 50	6,565	75	8
VTEXBP40025	4 x 25	5,441	125	8
VTEXBP40030	4 x 30	5,048	100	8
VTEXBP40035	4 x 35	3,949	75	8
VTEXBP40040	4 x 40	4,199	75	8
VTEXBP40045	4 x 45	5,402	75	8
VTEXBP40050	4 x 50	3,616	50	8
VTEXBP40060	4 x 60	5,409	50	8
VTEXBP45030	4,5 x 30	5,933	100	8
VTEXBP45035	4,5 x 35	5,234	75	8
VTEXBP45040	4,5 x 40	5,247	75	8
VTEXBP45045	4,5 x 45	4,640	50	8
VTEXBP45050	4,5 x 50	4,540	50	8
VTEXBP45060	4,5 x 60	6,497	50	8
VTEXBP45070	4,5 x 70	7,969	50	8
VTEXBP50030	5 x 30	5,655	75	8
VTEXBP50035	5 x 35	6,001	75	8
VTEXBP50040	5 x 40	4,731	50	8
VTEXBP50050	5 x 50	5,473	50	8
VTEXBP50060	5 x 60	3,441	25	8
VTEXBP50070	5 x 70	4,310	25	8
VTEXBP50080	5 x 80	5,223	25	8
VTEXBP50090	5 x 90	5,632	25	8
VTEXBP60050	6 x 50	7,794	40	8
VTEXBP60060	6 x 60	6,378	30	8
VTEXBP60070	6 x 70	4,802	20	8
VTEXBP60080	6 x 80	6,060	20	8

TEX

High-performance chipboard screw

WOOD

Wood panel | Thin wood | Pinewood | Hardwood

ZINC

TEX-ZP

Zinc-plated. Pz recess



CODE	SIZE	€/100		MIN. ORDER QTY.		
•TEXZP25010	2,5 x 10	1,290	PZ1	2.000	1.000	45.000
•TEXZP25012	2,5 x 12	1,347	PZ1	2.000	1.000	45.000
•TEXZP25016	2,5 x 16	1,513	PZ1	2.000	1.000	45.000
TEXZP25020	2,5 x 20	1,677	PZ1	2.000	1.000	45.000
TEXZP25025	2,5 x 25	1,867	PZ1	2.000	1.000	45.000
•TEXZP30010	3 x 10	1,533	PZ1	2.000	1.000	45.000
•TEXZP30012	3 x 12	1,620	PZ1	2.000	1.000	45.000
•TEXZP30015	3 x 15	1,753	PZ1	2.000	1.000	24.000
•TEXZP30016	3 x 16	1,790	PZ1	2.000	1.000	24.000
•TEXZP30020	3 x 20	1,977	PZ1	2.000	1.000	24.000
TEXZP30025	3 x 25	2,043	PZ1	2.000	1.000	24.000
TEXZP30030	3 x 30	2,757	PZ1	2.000	1.000	12.000
TEXZP30035	3 x 35	3,183	PZ1	2.000	1.000	12.000
TEXZP30040	3 x 40	3,843	PZ1	2.000	1.000	6.000
TEXZP30045	3 x 45	4,193	PZ1	1.000	500	6.000
•TEXZP35010	3,5 x 10	1,687	PZ2	2.000	1.000	24.000
•TEXZP35012	3,5 x 12	1,820	PZ2	2.000	1.000	24.000
•TEXZP35015	3,5 x 15	1,940	PZ2	2.000	1.000	24.000
•TEXZP35016	3,5 x 16	2,110	PZ2	2.000	1.000	24.000
•TEXZP35020	3,5 x 20	2,303	PZ2	2.000	1.000	24.000
TEXZP35025	3,5 x 25	2,663	PZ2	2.000	1.000	12.000
TEXZP35030	3,5 x 30	3,077	PZ2	2.000	1.000	12.000
TEXZP35035	3,5 x 35	3,860	PZ2	2.000	1.000	12.000
TEXZP35040	3,5 x 40	3,997	PZ2	1.000	500	6.000
TEXZP35045	3,5 x 45	5,583	PZ2	1.000	500	6.000
TEXZP35050	3,5 x 50	6,773	PZ2	1.000	500	6.000
•TEXZP40012	4 x 12	2,250	PZ2	2.000	1.000	24.000
•TEXZP40015	4 x 15	2,467	PZ2	2.000	1.000	24.000
•TEXZP40016	4 x 16	2,407	PZ2	2.000	1.000	24.000
•TEXZP40020	4 x 20	2,757	PZ2	2.000	1.000	12.000
•TEXZP40025	4 x 25	3,240	PZ2	2.000	1.000	12.000
TEXZP40030	4 x 30	3,693	PZ2	2.000	1.000	6.000
TEXZP40035	4 x 35	4,077	PZ2	1.000	500	6.000
TEXZP40040	4 x 40	4,467	PZ2	1.000	500	3.000
TEXZP40045	4 x 45	5,573	PZ2	1.000	500	3.000
TEXZP40050	4 x 50	5,603	PZ2	1.000	500	3.000
TEXZP40055	4 x 55	7,730	PZ2	500	250	3.000

CODE	SIZE	€/100		MIN. ORDER QTY.		
TEXZP40060	4 x 60	8,373	PZ2	500	250	3.000
TEXZP40070	4 x 70	9,473	PZ2	500	250	1.500
TEXZP40080	4 x 80	11,093	PZ2	500	250	1.500
•TEXZP45016	4,5 x 16	3,077	PZ2	2.000	1.000	12.000
•TEXZP45020	4,5 x 20	3,530	PZ2	2.000	1.000	12.000
•TEXZP45025	4,5 x 25	4,110	PZ2	2.000	1.000	12.000
•TEXZP45030	4,5 x 30	4,463	PZ2	1.000	500	6.000
TEXZP45035	4,5 x 35	5,250	PZ2	1.000	500	6.000
TEXZP45040	4,5 x 40	5,570	PZ2	1.000	500	3.000
TEXZP45045	4,5 x 45	6,643	PZ2	500	250	3.000
TEXZP45050	4,5 x 50	6,953	PZ2	500	250	3.000
TEXZP45060	4,5 x 60	9,553	PZ2	500	250	1.500
TEXZP45070	4,5 x 70	12,577	PZ2	500	250	1.500
TEXZP45080	4,5 x 80	15,423	PZ2	200	100	1.200
•TEXZP50025	5 x 25	5,530	PZ2	2.000	1.000	6.000
•TEXZP50030	5 x 30	5,783	PZ2	1.000	500	6.000
TEXZP50035	5 x 35	6,190	PZ2	1.000	500	6.000
TEXZP50040	5 x 40	6,790	PZ2	1.000	500	6.000
TEXZP50045	5 x 45	7,887	PZ2	500	250	3.000
TEXZP50050	5 x 50	8,467	PZ2	500	250	3.000
TEXZP50060	5 x 60	10,537	PZ2	500	250	1.500
TEXZP50070	5 x 70	12,367	PZ2	400	200	1.200
TEXZP50080	5 x 80	16,473	PZ2	200	100	1.200
TEXZP50090	5 x 90	16,937	PZ2	200	100	1.200
TEXZP50100	5 x 100	22,467	PZ2	200	100	1.200
TEXZP50110	5 x 110	25,417	PZ2	200	100	1.200
TEXZP50120	5 x 120	28,813	PZ2	200	100	1.200
•TEXZP60040	6 x 40	12,940	PZ3	500	250	3.000
•TEXZP60045	6 x 45	13,780	PZ3	500	250	3.000
•TEXZP60050	6 x 50	15,370	PZ3	500	250	1.500
TEXZP60060	6 x 60	16,783	PZ3	500	250	1.500
TEXZP60070	6 x 70	18,580	PZ3	200	100	600
TEXZP60080	6 x 80	23,433	PZ3	200	100	1.200
TEXZP60090	6 x 90	27,530	PZ3	200	100	1.200
TEXZP60100	6 x 100	27,783	PZ3	200	100	600
TEXZP60110	6 x 110	37,347	PZ3	200	100	600
TEXZP60120	6 x 120	41,860	PZ3	200	100	600

• Sizes without CE

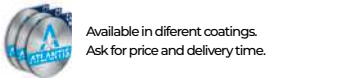

Available in diferent coatings.
Ask for price and delivery time.

Blister

CODE	SIZE	€/BAG	PCS.	BAGS
BZTXZP30016	3 x 16	2,565	40	20
BZTXZP30020	3 x 20	2,565	40	20
BZTXZP30025	3 x 25	2,565	40	20
BZTXZP30030	3 x 30	2,565	40	20
BZTXZP35016	3,5 x 16	2,565	40	20
BZTXZP35020	3,5 x 20	2,565	40	20
BZTXZP35025	3,5 x 25	2,565	40	20
BZTXZP35030	3,5 x 30	2,565	40	20
BZTXZP35035	3,5 x 35	2,565	20	20
BZTXZP35040	3,5 x 40	2,565	20	20
BZTXZP35050	3,5 x 50	2,565	20	20
BZTXZP40025	4 x 25	2,565	40	20
BZTXZP40030	4 x 30	2,565	20	20
BZTXZP40035	4 x 35	2,565	20	20
BZTXZP40040	4 x 40	2,565	20	20
BZTXZP40045	4 x 45	2,565	20	20
BZTXZP40050	4 x 50	2,565	10	20
BZTXZP40060	4 x 60	2,565	10	20
BZTXZP45030	4,5 x 30	2,565	20	20
BZTXZP45035	4,5 x 35	2,565	20	20
BZTXZP45040	4,5 x 40	2,565	20	20
BZTXZP45045	4,5 x 45	2,565	10	20
BZTXZP45050	4,5 x 50	2,565	10	20
BZTXZP45060	4,5 x 60	2,565	10	20
BZTXZP45070	4,5 x 70	2,565	10	20
BZTXZP50030	5 x 30	2,565	10	20
BZTXZP50035	5 x 35	2,565	10	20
BZTXZP50040	5 x 40	2,565	10	20
BZTXZP50050	5 x 50	2,565	10	20
BZTXZP50060	5 x 60	2,565	10	20
BZTXZP50070	5 x 70	2,565	4	20
BZTXZP50080	5 x 80	2,565	4	20
BZTXZP60050	6 x 50	2,565	10	20
BZTXZP60060	6 x 60	2,565	10	20
BZTXZP60070	6 x 70	2,565	4	20
BZTXZP60080	6 x 80	2,565	4	20

Window Box

CODE	SIZE	€/BOX	PCS.	BOXES
VTEXZP30016	3 x 16	4,758	200	8
VTEXZP30020	3 x 20	5,266	200	8
VTEXZP30025	3 x 25	5,318	200	8
VTEXZP30030	3 x 30	6,060	170	8
VTEXZP30040	3 x 40	5,960	120	8
VTEXZP35016	3,5 x 16	5,623	200	8
VTEXZP35020	3,5 x 20	6,131	200	8
VTEXZP35025	3,5 x 25	6,017	170	8
VTEXZP35030	3,5 x 30	6,144	150	8
VTEXZP35035	3,5 x 35	5,147	100	8
VTEXZP35040	3,5 x 40	3,873	75	8
VTEXZP35050	3,5 x 50	6,565	75	8
VTEXZP40025	4 x 25	5,441	125	8
VTEXZP40030	4 x 30	5,048	100	8
VTEXZP40035	4 x 35	3,949	75	8
VTEXZP40040	4 x 40	4,199	75	8
VTEXZP40045	4 x 45	5,402	75	8
VTEXZP40050	4 x 50	3,616	50	8
VTEXZP40060	4 x 60	5,409	50	8
VTEXZP45030	4,5 x 30	5,933	100	8
VTEXZP45035	4,5 x 35	5,234	75	8
VTEXZP45040	4,5 x 40	5,247	75	8
VTEXZP45045	4,5 x 45	4,640	50	8
VTEXZP45050	4,5 x 50	4,540	50	8
VTEXZP45060	4,5 x 60	6,497	50	8
VTEXZP45070	4,5 x 70	7,969	50	8
VTEXZP50030	5 x 30	5,655	75	8
VTEXZP50035	5 x 35	6,001	75	8
VTEXZP50040	5 x 40	4,731	50	8
VTEXZP50045	5 x 45	5,366	50	8
VTEXZP50050	5 x 50	5,473	50	8
VTEXZP50060	5 x 60	3,441	25	8
VTEXZP50070	5 x 70	4,310	25	8
VTEXZP50080	5 x 80	5,223	25	8
VTEXZP60050	6 x 50	7,794	40	8
VTEXZP60060	6 x 60	6,378	30	8
VTEXZP60070	6 x 70	4,802	20	8
VTEXZP60080	6 x 80	6,060	20	8

TEX

High-performance chipboard screw

TEX-BT

Yellow zinc-plated.
Tx recess





WOOD



CODE	SIZE	€/100		MIN. ORDER QTY.		
•TEXBT30016	3 x 16	2,223	TX10	2.000	1.000	24.000
•TEXBT30020	3 x 20	2,417	TX10	2.000	1.000	24.000
TEXBT30025	3 x 25	2,983	TX10	2.000	1.000	24.000
TEXBT30030	3 x 30	3,407	TX10	2.000	1.000	12.000
TEXBT30035	3 x 35	3,710	TX10	2.000	1.000	12.000
TEXBT30040	3 x 40	4,127	TX10	2.000	1.000	6.000
•TEXBT35012	3,5 x 12	2,557	TX15	2.000	1.000	24.000
•TEXBT35016	3,5 x 16	2,690	TX15	2.000	1.000	24.000
•TEXBT35020	3,5 x 20	2,893	TX15	2.000	1.000	24.000
TEXBT35025	3,5 x 25	3,617	TX15	2.000	1.000	12.000
TEXBT35030	3,5 x 30	3,913	TX15	2.000	1.000	12.000
TEXBT35035	3,5 x 35	4,397	TX15	2.000	1.000	12.000
TEXBT35040	3,5 x 40	5,327	TX15	1.000	500	6.000
TEXBT35045	3,5 x 45	5,833	TX15	1.000	500	6.000
TEXBT35050	3,5 x 50	6,143	TX15	1.000	500	6.000
•TEXBT40016	4 x 16	2,667	TX20	2.000	1.000	24.000
•TEXBT40020	4 x 20	3,033	TX20	2.000	1.000	12.000
•TEXBT40025	4 x 25	3,600	TX20	2.000	1.000	12.000
TEXBT40030	4 x 30	4,063	TX20	2.000	1.000	6.000
TEXBT40035	4 x 35	4,530	TX20	1.000	500	6.000
TEXBT40040	4 x 40	4,870	TX20	1.000	500	3.000
TEXBT40045	4 x 45	6,133	TX20	1.000	500	3.000
TEXBT40050	4 x 50	6,163	TX20	1.000	500	3.000
TEXBT40055	4 x 55	8,503	TX20	500	250	3.000
TEXBT40060	4 x 60	9,297	TX20	500	250	3.000
TEXBT40070	4 x 70	10,417	TX20	500	250	1.500
TEXBT45025	4,5 x 25	4,773	TX20	2.000	1.000	12.000
TEXBT45030	4,5 x 30	4,907	TX20	1.000	500	6.000
TEXBT45035	4,5 x 35	5,777	TX20	1.000	500	6.000
TEXBT45040	4,5 x 40	5,753	TX20	1.000	500	3.000
TEXBT45045	4,5 x 45	7,097	TX20	500	250	3.000
TEXBT45050	4,5 x 50	7,353	TX20	500	250	3.000
TEXBT45060	4,5 x 60	10,597	TX20	500	250	1.500
TEXBT45070	4,5 x 70	13,860	TX20	500	250	1.500
TEXBT45080	4,5 x 80	17,693	TX20	200	100	1.200
TEXBT50030	5 x 30	6,483	TX25	1.000	500	6.000
TEXBT50035	5 x 35	6,960	TX25	1.000	500	6.000
TEXBT50040	5 x 40	7,610	TX25	1.000	500	6.000
TEXBT50045	5 x 45	9,070	TX25	500	250	3.000
TEXBT50050	5 x 50	9,493	TX25	500	250	3.000
TEXBT50060	5 x 60	11,930	TX25	500	250	1.500
TEXBT50070	5 x 70	13,860	TX25	400	200	1.200
TEXBT50080	5 x 80	18,450	TX25	200	100	1.200
TEXBT50090	5 x 90	19,160	TX25	200	100	1.200
TEXBT50100	5 x 100	25,160	TX25	200	100	1.200
TEXBT50120	5 x 120	32,290	TX25	200	100	1.200
TEXBT60040	6 x 40	14,123	TX30	500	250	3.000

CODE	SIZE	€/100		MIN. ORDER QTY.		
TEXBT60045	6 x 45	15,217	TX30	500	250	3.000
TEXBT60050	6 x 50	16,873	TX30	500	250	1.500
TEXBT60060	6 x 60	19,300	TX30	500	250	1.500
TEXBT60070	6 x 70	21,390	TX30	200	100	1.200
TEXBT60080	6 x 80	26,073	TX30	200	100	1.200
TEXBT60090	6 x 90	30,030	TX30	200	100	600
TEXBT60100	6 x 100	31,950	TX30	200	100	600
TEXBT60110	6 x 110	42,053	TX30	200	100	600
TEXBT60120	6 x 120	48,057	TX30	200	100	1.200
TEXBT60130	6 x 130	48,457	TX30	200	100	600
TEXBT60140	6 x 140	57,393	TX30	200	100	600
TEXBT60150	6 x 150	65,223	TX30	200	100	600
TEXBT60160	6 x 160	80,890	TX30	100	100	600
TEXBT60180	6 x 180	102,067	TX30	100	100	800
TEXBT60200	6 x 200	131,553	TX30	100	100	800
TEXBT60220	6 x 220	144,963	TX30	100	100	-
TEXBT60240	6 x 240	164,107	TX30	100	100	-
TEXBT60260	6 x 260	194,807	TX30	100	100	-
TEXBT60280	6 x 280	216,700	TX30	100	100	-
TEXBT60300	6 x 300	232,253	TX30	100	100	-
TEXBT80080	8 x 80	51,590	TX40	200	100	600
TEXBT80100	8 x 100	55,317	TX40	100	50	300
TEXBT80120	8 x 120	82,090	TX40	100	50	300
TEXBT80140	8 x 140	87,810	TX40	50	50	300
TEXBT80160	8 x 160	128,560	TX40	50	50	300
TEXBT80180	8 x 180	136,557	TX40	50	50	150
TEXBT80200	8 x 200	153,763	TX40	50	50	400
TEXBT80220	8 x 220	183,180	TX40	50	50	400
TEXBT80240	8 x 240	200,480	TX40	50	50	400
TEXBT80260	8 x 260	234,790	TX40	50	50	-
TEXBT80280	8 x 280	252,000	TX40	50	50	-
TEXBT80300	8 x 300	258,677	TX40	50	50	200
TEXBT80320	8 x 320	318,303	TX40	50	50	-
TEXBT80340	8 x 340	355,320	TX40	50	50	-
TEXBT80360	8 x 360	392,573	TX40	50	50	-
TEXBT80380	8 x 380	452,687	TX40	50	50	-
TEXBT80400	8 x 400	475,457	TX40	50	50	-
TEXBT10080	10 x 80	85,667	TX40	50	50	-
TEXBT10100	10 x 100	108,630	TX40	50	50	400
TEXBT10120	10 x 120	136,177	TX40	50	50	-
TEXBT10140	10 x 140	164,263	TX40	50	50	-
TEXBT10160	10 x 160	191,823	TX40	50	50	-
TEXBT10180	10 x 180	257,870	TX40	50	50	-
TEXBT10200	10 x 200	289,697	TX40	50	50	-
TEXBT10220	10 x 220	319,833	TX40	50	50	-
TEXBT10240	10 x 240	352,840	TX40	50	50	-

• Sizes without CE

High-performance chipboard screw — TEX

WOOD — Wood panel · Thin wood · Pinewood · Hardwood

TEX-ZT

Zinc-plated. Tx recess



CODE	SIZE	€/100		MIN. ORDER QTY.		
•TEXZT30016	3 x 16	2,223	TX10	2.000	1.000	24.000
•TEXZT30020	3 x 20	2,417	TX10	2.000	1.000	24.000
•TEXZT30025	3 x 25	2,983	TX10	2.000	1.000	24.000
TEXZT30030	3 x 30	3,407	TX10	2.000	1.000	12.000
TEXZT30035	3 x 35	3,710	TX10	2.000	1.000	12.000
TEXZT30040	3 x 40	4,127	TX10	2.000	1.000	6.000
•TEXZT35012	3,5 x 12	2,557	TX15	2.000	1.000	24.000
•TEXZT35016	3,5 x 16	2,690	TX15	2.000	1.000	24.000
•TEXZT35020	3,5 x 20	2,893	TX15	2.000	1.000	24.000
TEXZT35025	3,5 x 25	3,617	TX15	2.000	1.000	12.000
TEXZT35030	3,5 x 30	3,913	TX15	2.000	1.000	12.000
TEXZT35035	3,5 x 35	4,397	TX15	2.000	1.000	12.000
TEXZT35040	3,5 x 40	5,327	TX15	1.000	500	6.000
TEXZT35045	3,5 x 45	5,833	TX15	1.000	500	6.000
TEXZT35050	3,5 x 50	6,143	TX15	1.000	500	6.000
•TEXZT40016	4 x 16	2,667	TX20	2.000	1.000	24.000
•TEXZT40020	4 x 20	3,033	TX20	2.000	1.000	12.000
•TEXZT40025	4 x 25	3,600	TX20	2.000	1.000	12.000
TEXZT40030	4 x 30	4,063	TX20	2.000	1.000	6.000
TEXZT40035	4 x 35	4,530	TX20	1.000	500	6.000
TEXZT40040	4 x 40	4,870	TX20	1.000	500	6.000
TEXZT40045	4 x 45	6,133	TX20	1.000	500	6.000
TEXZT40050	4 x 50	6,163	TX20	1.000	500	6.000
TEXZT40055	4 x 55	8,503	TX20	500	250	3.000
TEXZT40060	4 x 60	9,297	TX20	500	250	3.000
TEXZT40070	4 x 70	10,417	TX20	500	250	1.500
TEXZT45030	4,5 x 30	4,907	TX20	1.000	500	6.000
TEXZT45035	4,5 x 35	5,777	TX20	1.000	500	6.000
TEXZT45040	4,5 x 40	5,753	TX20	1.000	500	3.000
TEXZT45050	4,5 x 50	7,353	TX20	500	250	3.000
TEXZT45060	4,5 x 60	10,597	TX20	500	250	1.500

CODE	SIZE	€/100		MIN. ORDER QTY.		
TEXZT45070	4,5 x 70	13,860	TX20	500	250	1.500
TEXZT45080	4,5 x 80	17,693	TX20	200	100	1.200
•TEXZT50030	5 x 30	6,483	TX25	1.000	500	6.000
TEXZT50035	5 x 35	6,960	TX25	1.000	500	6.000
TEXZT50040	5 x 40	7,610	TX25	1.000	500	6.000
TEXZT50045	5 x 45	9,070	TX25	500	250	3.000
TEXZT50050	5 x 50	9,493	TX25	500	250	3.000
TEXZT50060	5 x 60	11,930	TX25	500	250	1.500
TEXZT50070	5 x 70	13,860	TX25	400	200	1.200
TEXZT50080	5 x 80	18,450	TX25	200	100	1.200
TEXZT50090	5 x 90	19,160	TX25	200	100	1.200
TEXZT50100	5 x 100	25,160	TX25	200	100	1.200
•TEXZT60050	6 x 50	16,873	TX30	500	250	1.500
TEXZT60060	6 x 60	19,300	TX30	500	250	1.500
TEXZT60070	6 x 70	21,390	TX30	200	100	1.200
TEXZT60080	6 x 80	26,073	TX30	200	100	1.200
TEXZT60090	6 x 90	30,030	TX30	200	100	600
TEXZT60100	6 x 100	31,950	TX30	200	100	600
TEXZT60110	6 x 110	42,053	TX30	200	100	600
TEXZT60120	6 x 120	48,057	TX30	200	100	600
TEXZT60130	6 x 130	48,457	TX30	100	100	600
TEXZT60140	6 x 140	57,393	TX30	100	100	600
TEXZT60150	6 x 150	65,223	TX30	100	100	600
TEXZT60160	6 x 160	80,890	TX30	100	100	600
TEXZT60180	6 x 180	102,067	TX30	100	100	800
TEXZT60200	6 x 200	131,553	TX30	100	100	300
TEXZT60220	6 x 220	144,963	TX30	100	100	
TEXZT60240	6 x 240	164,107	TX30	100	100	600
TEXZT60260	6 x 260	194,807	TX30	100	100	-
TEXZT60280	6 x 280	216,700	TX30	100	100	-
TEXZT60300	6 x 300	232,253	TX30	100	100	-

• Sizes without CE

Available in diferent coatings.
Ask for price and delivery time.

STAINLESS STEEL — Wood panel · Thin wood · Pinewood · Hardwood

TEX-A2

A2 Stainless steel. Tx recess



CODE	SIZE	€/100			
TEXA250050	5 x 50	27,153	TX25	250	3.000
TEXA250060	5 x 60	32,627	TX25	100	2.400
TEXA250070	5 x 70	36,980	TX25	100	2.400

Blister

CODE	SIZE	€/BAG	PCS.	BAGS
BZTXA250050	5 x 50	2,565	4	20
BZTXA250060	5 x 60	2,565	4	20
BZTXA250070	5 x 70	2,565	2	20

Window Box

CODE	SIZE	€/BOX	PCS.	BOXES
VTEXA250050	5 x 50	6,988	20	8
VTEXA250060	5 x 60	8,395	20	8
VTEXA250070	5 x 70	9,519	20	8

Display

Complete screw range for wood





BLISTER



WINDOW BOX



PROFESSIONAL BOX

DIMENSIONS:
Width: 100 cm
Width: 240 cm

TEX

High-performance chipboard screw

WOOD — Wood panel, Thin wood, Pinewood, Hardwood

TEC-BT

Yellow zinc-plated width head.
Tx recess



CODE	SIZE	€/100			
TECBT60080	6 x 80	**33,593**	TX30	200	1.200
TECBT60100	6 x 100	**39,110**	TX30	100	1.200
TECBT60120	6 x 120	**61,920**	TX30	100	600
TECBT60140	6 x 140	**73,947**	TX30	100	600
TECBT60160	6 x 160	**104,220**	TX30	100	400
TECBT60180	6 x 180	**131,507**	TX30	100	-
TECBT60200	6 x 200	**169,497**	TX40	100	-
TECBT80080	8 x 80	**66,467**	TX40	50	600
TECBT80100	8 x 100	**68,837**	TX40	50	300
TECBT80120	8 x 120	**105,757**	TX40	50	300
TECBT80140	8 x 140	**110,173**	TX40	50	300
TECBT80160	8 x 160	**160,563**	TX40	50	200
TECBT80180	8 x 180	**167,153**	TX40	50	-
TECBT80200	8 x 200	**188,210**	TX40	50	-
TECBT80220	8 x 220	**236,017**	TX40	50	-

CODE	SIZE	€/100			
TECBT80240	8 x 240	**245,387**	TX40	50	-
TECBT80260	8 x 260	**287,387**	TX40	50	-
TECBT80280	8 x 280	**308,447**	TX40	50	-
TECBT80300	8 x 300	**329,813**	TX40	50	-
TECBT10100	10 x 100	**132,963**	TX40	50	300
TECBT10120	10 x 120	**166,680**	TX40	50	300
TECBT10140	10 x 140	**201,053**	TX40	50	300
TECBT10160	10 x 160	**234,790**	TX40	50	200
TECBT10180	10 x 180	**315,630**	TX40	50	-
TECBT10200	10 x 200	**354,593**	TX40	25	-
TECBT10220	10 x 220	**391,480**	TX40	25	-
TECBT10240	10 x 240	**431,870**	TX40	25	-
TECBT10260	10 x 260	**479,673**	TX40	25	-
TECBT10280	10 x 280	**538,170**	TX40	25	-
TECBT10300	10 x 300	**589,317**	TX40	25	-

WOOD — Wood panel, Thin wood, Pinewood, Hardwood

TEX-AB

Conical washer



CODE	SIZE	€/100		
TEXABM06	Ø6	**52,573**	100	2.400
TEXABM08	Ø8	**67,770**	100	2.400
TEXABM10	Ø10	**114,980**	100	1.200



Higher performance

Improves performance through a larger fixing surface.



INDEXwood V1

DESIGN SOFTWARE FOR CALCULATING WOODEN STRUCTURES

This makes it possible to calculate wooden structural fixings with self-tapping screws according to Eurocode 5 (EN 1995-1-1 standard).

TEX

HIGH-PERFORMANCE CHIPBOARD SCREW FOR WOOD

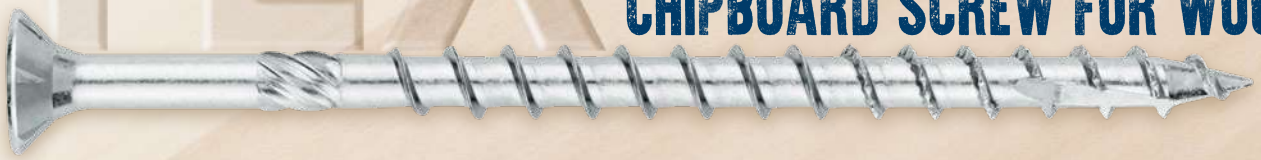

TEX SCREW CHARACTERISTICS • COMPARATIVE TABLE

TECBT	TEXBT	TEXBP	TEXZT	TEXZP	Ø	SCREW LENGTH	THREAD LENGTH	CLEANER	ULTRA-SHARP TIP	RECESS
-	-	TEXBP25010	-	TEXZP25010	2,5	10	COMPLET	-	-	PZ1
-	-	TEXBP25012	-	TEXZP25012		12				
-	-	TEXBP25016	-	TEXZP25016		16				
-	-	TEXBP25020	-	TEXZP25020		20				
-	-	TEXBP25025	-	TEXZP25025		25				
-	-	TEXBP30010	-	TEXZP30010	3	10	COMPLET	-	-	PZ1
-	-	TEXBP30012	-	TEXZP30012		12				
-	-	TEXBP30015	-	TEXZP30015		15				
-	TEXBT30016	TEXBP30016	TEXZT30016	TEXZP30016		16				
-	TEXBT30020	TEXBP30020	TEXZT30020	TEXZP30020		20				
-	TEXBT30025	TEXBP30025	TEXZT30025	TEXZP30025		25				
-	TEXBT30030	TEXBP30030	TEXZT30030	TEXZP30030		30				
-	TEXBT30035	TEXBP30035	TEXZT30035	TEXZP30035		35				
-	TEXBT30040	TEXBP30040	TEXZT30040	TEXZP30040		40				
-	-	TEXBP30045	-	TEXZP30045		45				
-	-	TEXBP35010	-	TEXZP35010	3,5	10	COMPLET	-	-	PZ2
-	TEXBT35012	TEXBP35012	TEXZT35012	TEXZP35012		12				
-	-	TEXBP35015	-	TEXZP35015		15				
-	TEXBT35016	TEXBP35016	TEXZT35016	TEXZP35016		16				
-	TEXBT35020	TEXBP35020	TEXZT35020	TEXZP35020		20				
-	TEXBT35025	TEXBP35025	TEXZT35025	TEXZP35025		25				
-	TEXBT35030	TEXBP35030	TEXZT35030	TEXZP35030		30				
-	TEXBT35035	TEXBP35035	TEXZT35035	TEXZP35035		35				
-	TEXBT35040	TEXBP35040	TEXZT35040	TEXZP35040		40	30			
-	TEXBT35045	TEXBP35045	TEXZT35045	TEXZP35045		45				
-	TEXBT35050	TEXBP35050	TEXZT35050	TEXZP35050		50				
-	-	TEXBP40012	-	TEXZP40012	4	12	COMPLET	-	-	TX20 / PZ2
-	-	TEXBP40015	-	TEXZP40015		15				
-	TEXBT40016	TEXBP40016	TEXZT40016	TEXZP40016		16				
-	TEXBT40020	TEXBP40020	TEXZT40020	TEXZP40020		20				
-	TEXBT40025	TEXBP40025	TEXZT40025	TEXZP40025		25				
-	TEXBT40030	TEXBP40030	TEXZT40030	TEXZP40030		30				
-	TEXBT40035	TEXBP40035	TEXZT40035	TEXZP40035		35				
-	TEXBT40040	TEXBP40040	TEXZT40040	TEXZP40040		40				
-	TEXBT40045	TEXBP40045	TEXZT40045	TEXZP40045		45	30	SI		
-	TEXBT40050	TEXBP40050	TEXZT40050	TEXZP40050		50				
-	TEXBT40055	TEXBP40055	TEXZT40055	TEXZP40055		55	40			
-	TEXBT40060	TEXBP40060	TEXZT40060	TEXZP40060		60				
-	TEXBT40070	TEXBP40070	TEXZT40070	TEXZP40070		70				
-	-	TEXBP40080	-	TEXZP40080		80				
-	-	TEXBP45016	-	TEXZP45016	4,5	16	COMPLET	-	-	T20 / PZ2
-	-	TEXBP45020	-	TEXZP45020		20				
-	TEXBT45025	TEXBP45025	-	TEXZP45025		25				
-	TEXBT45030	TEXBP45030	TEXZT45030	TEXZP45030		30				
-	TEXBT45035	TEXBP45035	TEXZT45035	TEXZP45035		35				
-	TEXBT45040	TEXBP45040	TEXZT45040	TEXZP45040		40				
-	TEXBT45045	TEXBP45045	-	TEXZP45045		45	30	SI		
-	TEXBT45050	TEXBP45050	TEXZT45050	TEXZP45050		50				
-	TEXBT45060	TEXBP45060	TEXZT45060	TEXZP45060		60	40			
-	TEXBT45070	TEXBP45070	TEXZT45070	TEXZP45070		70				
-	TEXBT45080	TEXBP45080	TEXZT45080	TEXZP45080		80				

INDEX
A PERFECT FIXING

TECBT	TEXBT	TEXBP	TEXZT	TEXZP	Ø	SCREW LENGTH	THREAD LENGTH	CLEANER	ULTRA-SHARP TIP	RECESS
-	-	TEXBP50025	-	TEXZP50025		25				
-	TEXBT50030	TEXBP50030	TEXZT50030	TEXZP50030		30	COMPLET	-		
-	TEXBT50035	TEXBP50035	TEXZT50035	TEXZP50035		35				
-	TEXBT50040	TEXBP50040	TEXZT50040	TEXZP50040		40				
-	TEXBT50045	TEXBP50045	TEXZT50045	TEXZP50045		45	30			
-	TEXBT50050	TEXBP50050	TEXZT50050	TEXZP50050		50				
-	TEXBT50060	TEXBP50060	TEXZT50060	TEXZP50060	5	60			SI	TX25 / PZ2
-	TEXBT50070	TEXBP50070	TEXZT50070	TEXZP50070		70	40			
-	TEXBT50080	TEXBP50080	TEXZT50080	TEXZP50080		80		SI		
-	TEXBT50090	TEXBP50090	TEXZT50090	TEXZP50090		90				
-	TEXBT50100	TEXBP50100	TEXZT50100	TEXZP50100		100				
-	-	TEXBP50110	-	TEXZP50110		110	70			
-	TEXBT50120	TEXBP50120	-	TEXZP50120		120				
-	TEXBT60040	TEXBP60040	-	TEXZP60040		40		-		
-	TEXBT60045	TEXBP60045	-	TEXZP60045		45	30			
-	TEXBT60050	TEXBP60050	TEXZT60050	TEXZP60050		50				
-	TEXBT60060	TEXBP60060	TEXZT60060	TEXZP60060		60				
-	TEXBT60070	TEXBP60070	TEXZT60070	TEXZP60070		70	40			
TECBT60080	TEXBT60080	TEXBP60080	TEXZT60080	TEXZP60080		80				
-	TEXBT60090	TEXBP60090	TEXZT60090	TEXZP60090		90				
TECBT60100	TEXBT60100	TEXBP60100	TEXZT60100	TEXZP60100		100				
-	TEXBT60110	TEXBP60110	TEXZT60110	TEXZP60110		110				
TECBT60120	TEXBT60120	TEXBP60120	TEXZT60120	TEXZP60120		120				
-	TEXBT60130	-	TEXZT60130	-	6	130		SI	SI	TX30 / PZ2
TECBT60140	TEXBT60140	-	TEXZT60140	-		140				
-	TEXBT60150	-	TEXZT60150	-		150				
TECBT60160	TEXBT60160	-	TEXZT60160	-		160				
TECBT60180	TEXBT60180	-	TEXZT60180	-		180	70			
TECBT60200	TEXBT60200	-	TEXZT60200	-		200				
-	TEXBT60220	-	TEXZT60220	-		220				
-	TEXBT60240	-	TEXZT60240	-		240				
-	TEXBT60260	-	TEXZT60260	-		260				
-	TEXBT60280	-	TEXZT60280	-		280				
-	TEXBT60300	-	TEXZT60300	-		300				
TECBT80080	TEXBT80080	-	-	-		80	40			
TECBT80100	TEXBT80100	-	-	-		100	70			
TECBT80120	TEXBT80120	-	-	-		120				
TECBT80140	TEXBT80140	-	-	-		140				
TECBT80160	TEXBT80160	-	-	-		160				
TECBT80180	TEXBT80180	-	-	-		180				
TECBT80200	TEXBT80200	-	-	-		200				
TECBT80220	TEXBT80220	-	-	-		220				
TECBT80240	TEXBT80240	-	-	-	8	240		SI	SI	TX40
TECBT80260	TEXBT80260	-	-	-		260	80			
TECBT80280	TEXBT80280	-	-	-		280				
TECBT80300	TEXBT80300	-	-	-		300				
-	TEXBT80320	-	-	-		320				
-	TEXBT80340	-	-	-		340				
-	TEXBT80360	-	-	-		360				
-	TEXBT80380	-	-	-		380				
-	TEXBT80400	-	-	-		400				
-	TEXBT10080	-	-	-		80	40			
TECBT10100	TEXBT10100	-	-	-		100				
TECBT10120	TEXBT10120	-	-	-		120				
TECBT10140	TEXBT10140	-	-	-		140				
TECBT10160	TEXBT10160	-	-	-		160				
TECBT10180	TEXBT10180	-	-	-		180				
TECBT10200	TEXBT10200	-	-	-		200				
TECBT10220	TEXBT10220	-	-	-		220				
TECBT10240	TEXBT10240	-	-	-	10	240		SI	SI	TX40
TECBT10260	-	-	-	-		260	80			
TECBT10280	-	-	-	-		280				
TECBT10300	-	-	-	-		300				
-	-	-	-	-		320				
-	-	-	-	-		340				
-	-	-	-	-		360				
-	-	-	-	-		380				
-	-	-	-	-		400				
-	-	-	-	-		450				

TP

Countersunk head chipboard screw

TP-PO B

Yellow zinc-plated.
PZ recess





WOOD



CODE	SIZE	€/100		THREAD LENGHT (mm)	MIN. ORDER QTY.		
•TPP025010	2,5 x 10	**1,200**	PZ1	Total	2.000	1.000	45.000
•TPP025012	2,5 x 12	**1,207**	PZ1	Total	2.000	1.000	45.000
•TPP025016	2,5 x 16	**1,350**	PZ1	Total	2.000	1.000	45.000
TPP025020	2,5 x 20	**1,527**	PZ1	Total	2.000	1.000	24.000
TPP025025	2,5 x 25	**1,643**	PZ1	Total	2.000	1.000	24.000
•TPP030012	3 x 12	**1,073**	PZ1	Total	2.000	1.000	45.000
•TPP030016	3 x 16	**1,240**	PZ1	Total	2.000	1.000	24.000
•TPP030020	3 x 20	**1,393**	PZ1	Total	2.000	1.000	24.000
TPP030025	3 x 25	**1,623**	PZ1	Total	2.000	1.000	12.000
TPP030030	3 x 30	**1,747**	PZ1	Total	2.000	1.000	12.000
TPP030040	3 x 40	**2,300**	PZ1	Total	2.000	1.000	6.000
•TPP035016	3,5 x 16	**1,367**	PZ2	Total	2.000	1.000	24.000
•TPP035020	3,5 x 20	**1,623**	PZ2	Total	2.000	1.000	12.000
TPP035025	3,5 x 25	**1,870**	PZ2	Total	2.000	1.000	12.000
TPP035030	3,5 x 30	**2,053**	PZ2	Total	2.000	1.000	12.000
TPP035035	3,5 x 35	**2,570**	PZ2	Total	1.000	500	6.000
TPP035040	3,5 x 40	**2,793**	PZ2	Total	1.000	500	6.000
TPP035050	3,5 x 50	**3,653**	PZ2	Total	500	250	3.000
•TPP040016	4 x 16	**1,757**	PZ2	Total	2.000	1.000	16.000
•TPP040020	4 x 20	**2,093**	PZ2	Total	2.000	1.000	12.000
•TPP040025	4 x 25	**2,333**	PZ2	Total	2.000	1.000	12.000
TPP040030	4 x 30	**2,777**	PZ2	Total	1.000	500	6.000
TPP040035	4 x 35	**3,067**	PZ2	Total	1.000	500	6.000
TPP040040	4 x 40	**3,307**	PZ2	Total	1.000	500	6.000
TPP040045	4 x 45	**4,167**	PZ2	Total	1.000	500	3.000
TPP040050	4 x 50	**4,557**	PZ2	Total	500	250	3.000
TPP040060	4 x 60	**5,277**	PZ2	Total	500	250	3.000
TPP040070	4 x 70	**6,500**	PZ2	Partial-52	500	250	3.000
•TPP045020	4,5 x 20	**2,643**	PZ2	Total	1.000	500	12.000
•TPP045025	4,5 x 25	**3,140**	PZ2	Total	1.000	500	6.000
•TPP045030	4,5 x 30	**3,560**	PZ2	Total	1.000	500	6.000
TPP045035	4,5 x 35	**3,873**	PZ2	Total	1.000	500	6.000
TPP045040	4,5 x 40	**4,273**	PZ2	Total	1.000	500	3.000
TPP045045	4,5 x 45	**5,277**	PZ2	Total	500	250	3.000
TPP045050	4,5 x 50	**5,620**	PZ2	Total	500	250	3.000
TPP045060	4,5 x 60	**6,620**	PZ2	Total	500	250	3.000
TPP045070	4,5 x 70	**8,097**	PZ2	Partial-52	500	250	1.500
TPP045080	4,5 x 80	**10,103**	PZ2	Partial-52	200	100	1.200
•TPP050020	5 x 20	**3,260**	PZ2	Total	1.000	500	6.000
•TPP050025	5 x 25	**3,880**	PZ2	Total	1.000	500	6.000
•TPP050030	5 x 30	**4,390**	PZ2	Total	500	250	6.000
TPP050035	5 x 35	**4,953**	PZ2	Total	500	250	3.000
TPP050040	5 x 40	**5,437**	PZ2	Total	500	250	3.000
TPP050045	5 x 45	**6,280**	PZ2	Total	500	250	3.000
TPP050050	5 x 50	**6,633**	PZ2	Total	500	250	3.000
TPP050060	5 x 60	**8,063**	PZ2	Total	500	250	1.500
TPP050070	5 x 70	**9,983**	PZ2	Partial-52	200	100	1.200
TPP050080	5 x 80	**11,387**	PZ2	Partial-52	200	100	1.200
TPP050090	5 x 90	**13,527**	PZ2	Partial-60	200	100	1.200
TPP050100	5 x 100	**14,603**	PZ2	Partial-60	200	100	1.200
TPP050120	5 x 120	**22,030**	PZ2	Partial-75	200	100	1.200
•TPP060040	6 x 40	**8,227**	PZ3	Total	500	250	3.000
TPP060050	6 x 50	**9,480**	PZ3	Total	500	250	1.500
TPP060060	6 x 60	**11,037**	PZ3	Total	500	250	1.500
TPP060070	6 x 70	**14,303**	PZ3	Partial-52	200	100	1.200
TPP060080	6 x 80	**16,233**	PZ3	Partial-52	200	100	1.200
TPP060090	6 x 90	**18,483**	PZ3	Partial-60	200	100	1.200
TPP060100	6 x 100	**21,020**	PZ3	Partial-60	100	100	1.200
TPP060110	6 x 110	**24,863**	PZ3	Partial-70	100	100	600
TPP060120	6 x 120	**26,437**	PZ3	Partial-70/75	100	100	600
TPP060130	6 x 130	**31,007**	PZ3	Partial-70/75	100	100	600
TPP060140	6 x 140	**34,893**	PZ3	Partial-70/75	100	100	600
TPP060150	6 x 150	**37,737**	PZ3	Partial-70/75	100	100	600
TPP060160	6 x 160	**42,040**	PZ3	Partial-70/75	100	100	400
TPP060180	6 x 180	**61,490**	PZ3	Partial-70/75	100	100	300
TPP060200	6 x 200	**80,057**	PZ3	Partial-70/75	100	100	300
TPP060220	6 x 220	**115,643**	PZ3	Partial-70/75	100	100	300

• Sizes without CE

More range next page

Countersunk head chipboard screw

TP

Blister

CODE	SIZE	€/BAG	PCS.	BAGS
BZTPP025016	2,5 x 16	**2,029**	40	20
BZTPP025020	2,5 x 20	**2,029**	40	20
BZTPP025025	2,5 x 25	**2,029**	40	20
BZTPP030016	3 x 16	**2,029**	40	20
BZTPP030020	3 x 20	**2,029**	40	20
BZTPP030025	3 x 25	**2,029**	40	20
BZTPP030030	3 x 30	**2,029**	40	20
BZTPP035016	3,5 x 16	**2,029**	40	20
BZTPP035020	3,5 x 20	**2,029**	40	20
BZTPP035025	3,5 x 25	**2,029**	40	20
BZTPP035030	3,5 x 30	**2,029**	40	20
BZTPP035035	3,5 x 35	**2,029**	20	20
BZTPP035040	3,5 x 40	**2,029**	20	20
BZTPP035050	3,5 x 50	**2,029**	20	20
BZTPP040016	4 x 16	**2,029**	40	20
BZTPP040020	4 x 20	**2,029**	40	20
BZTPP040025	4 x 25	**2,029**	40	20
BZTPP040030	4 x 30	**2,029**	20	20
BZTPP040035	4 x 35	**2,029**	20	20
BZTPP040040	4 x 40	**2,029**	20	20
BZTPP040045	4 x 45	**2,029**	20	20
BZTPP040050	4 x 50	**2,029**	10	20
BZTPP040060	4 x 60	**2,029**	10	20
BZTPP045030	4,5 x 30	**2,029**	20	20
BZTPP045035	4,5 x 35	**2,029**	20	20
BZTPP045040	4,5 x 40	**2,029**	20	20
BZTPP045045	4,5 x 45	**2,029**	10	20
BZTPP045050	4,5 x 50	**2,029**	10	20
BZTPP045060	4,5 x 60	**2,029**	10	20
BZTPP045070	4,5 x 70	**2,029**	10	20
BZTPP050030	5 x 30	**2,029**	10	20
BZTPP050035	5 x 35	**2,029**	10	20
BZTPP050040	5 x 40	**2,029**	10	20
BZTPP050050	5 x 50	**2,029**	10	20
BZTPP050060	5 x 60	**2,029**	10	20
BZTPP050070	5 x 70	**2,029**	4	20
BZTPP050080	5 x 80	**2,029**	4	20
BZTPP050100	5 x 100	**2,029**	4	20
BZTPP060040	6 x 40	**2,029**	10	20
BZTPP060050	6 x 50	**2,029**	10	20
BZTPP060060	6 x 60	**2,029**	10	20
BZTPP060070	6 x 70	**2,029**	4	20
BZTPP060080	6 x 80	**2,029**	4	20
BZTPP060090	6 x 90	**2,029**	4	20
BZTPP060100	6 x 100	**2,029**	4	20

Window Box

CODE	SIZE	€/BOX	PCS.	BOXES
VTPP030016	3 x 16	**4,210**	250	8
VTPP030020	3 x 20	**4,700**	250	8
VTPP030025	3 x 25	**5,379**	250	8
VTPP030030	3 x 30	**5,654**	250	8
VTPP030040	3 x 40	**7,181**	250	8
VTPP035016	3,5 x 16	**4,527**	250	8
VTPP035020	3,5 x 20	**5,257**	250	8
VTPP035025	3,5 x 25	**5,992**	250	8
VTPP035030	3,5 x 30	**6,424**	250	8
VTPP035035	3,5 x 35	**5,249**	150	8
VTPP035040	3,5 x 40	**5,557**	150	8
VTPP035050	3,5 x 50	**5,021**	100	8
VTPP040016	4 x 16	**5,870**	250	8
VTPP040020	4 x 20	**6,854**	250	8
VTPP040025	4 x 25	**7,572**	250	8
VTPP040030	4 x 30	**6,078**	175	8
VTPP040035	4 x 35	**5,877**	150	8
VTPP040040	4 x 40	**6,449**	150	8
VTPP040045	4 x 45	**7,875**	150	8
VTPP040050	4 x 50	**5,926**	100	8
VTPP040060	4 x 60	**6,913**	100	8
VTPP045030	4,5 x 30	**6,802**	150	8
VTPP045035	4,5 x 35	**7,453**	150	8
VTPP045040	4,5 x 40	**8,016**	150	8
VTPP045045	4,5 x 45	**6,058**	90	8
VTPP045050	4,5 x 50	**7,369**	100	8
VTPP045060	4,5 x 60	**6,761**	80	8
VTPP045070	4,5 x 70	**6,241**	60	8
VTPP050030	5 x 30	**5,697**	100	8
VTPP050035	5 x 35	**6,201**	100	8
VTPP050040	5 x 40	**6,802**	100	8
VTPP050050	5 x 50	**8,303**	100	8
VTPP050060	5 x 60	**8,234**	80	8
VTPP050070	5 x 70	**4,581**	35	8
VTPP050080	5 x 80	**4,477**	30	8
VTPP050090	5 x 90	**5,207**	30	8
VTPP060040	6 x 40	**10,290**	100	8
VTPP060050	6 x 50	**9,488**	80	8
VTPP060060	6 x 60	**8,451**	60	8
VTPP060070	6 x 70	**5,425**	30	8
VTPP060080	6 x 80	**5,903**	30	8

TP-PO B

Yellow zinc-plated. PZ recess



More range previous page

TP

Countersunk head chipboard screw

TP-PO Z

Zinc-plated. PZ recess





Available in diferent coatings.
Ask for price and delivery time.

WOOD


Wood panel


Thin wood


Pinewood

CODE	SIZE	€/100		THREAD LENGHT (mm)	MIN. ORDER QTY.		
•TPPOZ25010	2,5 x 10	**1,200**	PZ1	Total	2.000	1.000	45.000
•TPPOZ25012	2,5 x 12	**1,207**	PZ1	Total	2.000	1.000	45.000
•TPPOZ25016	2,5 x 16	**1,350**	PZ1	Total	2.000	1.000	45.000
TPPOZ25020	2,5 x 20	**1,527**	PZ1	Total	2.000	1.000	24.000
TPPOZ25025	2,5 x 25	**1,643**	PZ1	Total	2.000	1.000	24.000
•TPPOZ30012	3 x 12	**1,073**	PZ1	Total	2.000	1.000	45.000
•TPPOZ30016	3 x 16	**1,240**	PZ1	Total	2.000	1.000	24.000
•TPPOZ30020	3 x 20	**1,393**	PZ1	Total	2.000	1.000	24.000
TPPOZ30025	3 x 25	**1,623**	PZ1	Total	2.000	1.000	12.000
TPPOZ30030	3 x 30	**1,747**	PZ1	Total	2.000	1.000	12.000
TPPOZ30040	3 x 40	**2,300**	PZ1	Total	2.000	1.000	6.000
•TPPOZ35016	3,5 x 16	**1,367**	PZ2	Total	2.000	1.000	24.000
•TPPOZ35020	3,5 x 20	**1,623**	PZ2	Total	2.000	1.000	12.000
TPPOZ35025	3,5 x 25	**1,870**	PZ2	Total	2.000	1.000	12.000
TPPOZ35030	3,5 x 30	**2,053**	PZ2	Total	2.000	1.000	12.000
TPPOZ35035	3,5 x 35	**2,570**	PZ2	Total	1.000	500	6.000
TPPOZ35040	3,5 x 40	**2,793**	PZ2	Total	1.000	500	6.000
TPPOZ35050	3,5 x 50	**3,653**	PZ2	Total	500	250	3.000
•TPPOZ40016	4 x 16	**1,757**	PZ2	Total	2.000	1.000	16.000
•TPPOZ40020	4 x 20	**2,093**	PZ2	Total	2.000	1.000	12.000
•TPPOZ40025	4 x 25	**2,333**	PZ2	Total	2.000	1.000	12.000
TPPOZ40030	4 x 30	**2,777**	PZ2	Total	1.000	500	6.000
TPPOZ40035	4 x 35	**3,067**	PZ2	Total	1.000	500	6.000
TPPOZ40040	4 x 40	**3,307**	PZ2	Total	1.000	500	6.000
TPPOZ40045	4 x 45	**4,167**	PZ2	Total	1.000	500	3.000
TPPOZ40050	4 x 50	**4,557**	PZ2	Total	500	250	3.000
TPPOZ40060	4 x 60	**5,277**	PZ2	Total	500	250	3.000
TPPOZ40070	4 x 70	**6,500**	PZ2	Partial-52	500	250	1.500
•TPPOZ45020	4,5 x 20	**2,643**	PZ2	Total	1.000	500	12.000
•TPPOZ45025	4,5 x 25	**3,140**	PZ2	Total	1.000	500	6.000
•TPPOZ45030	4,5 x 30	**3,560**	PZ2	Total	1.000	500	6.000
TPPOZ45035	4,5 x 35	**3,873**	PZ2	Total	1.000	500	6.000
TPPOZ45040	4,5 x 40	**4,273**	PZ2	Total	1.000	500	3.000
TPPOZ45045	4,5 x 45	**5,277**	PZ2	Total	500	250	3.000
TPPOZ45050	4,5 x 50	**5,620**	PZ2	Total	500	250	3.000
TPPOZ45060	4,5 x 60	**6,620**	PZ2	Total	500	250	3.000
TPPOZ45070	4,5 x 70	**8,097**	PZ2	Partial-52	500	250	1.500
TPPOZ45080	4,5 x 80	**10,103**	PZ2	Partial-52	200	100	1.200
•TPPOZ50020	5 x 20	**3,260**	PZ2	Total	1.000	500	6.000
•TPPOZ50025	5 x 25	**3,880**	PZ2	Total	1.000	500	6.000
•TPPOZ50030	5 x 30	**4,390**	PZ2	Total	500	250	6.000
TPPOZ50035	5 x 35	**4,953**	PZ2	Total	500	250	3.000
TPPOZ50040	5 x 40	**5,437**	PZ2	Total	500	250	3.000
TPPOZ50045	5 x 45	**6,280**	PZ2	Total	500	250	3.000
TPPOZ50050	5 x 50	**6,633**	PZ2	Total	500	250	3.000
TPPOZ50060	5 x 60	**8,063**	PZ2	Total	500	250	1.500
TPPOZ50070	5 x 70	**9,983**	PZ2	Partial-52	200	100	1.200
TPPOZ50080	5 x 80	**11,387**	PZ2	Partial-52	200	100	1.200
TPPOZ50090	5 x 90	**13,527**	PZ2	Partial-60	200	100	1.200
TPPOZ50100	5 x 100	**14,603**	PZ2	Partial-60	200	100	1.200
TPPOZ50120	5 x 120	**22,030**	PZ2	Partial-75	200	100	1.200
•TPPOZ60040	6 x 40	**8,227**	PZ3	Total	500	250	3.000
TPPOZ60050	6 x 50	**9,480**	PZ3	Total	500	250	1.500
TPPOZ60060	6 x 60	**11,037**	PZ3	Total	500	250	1.500
TPPOZ60070	6 x 70	**14,303**	PZ3	Partial-52	200	100	1.200
TPPOZ60080	6 x 80	**16,233**	PZ3	Partial-52	200	100	1.200
TPPOZ60090	6 x 90	**18,483**	PZ3	Partial-60	200	100	1.200
TPPOZ60100	6 x 100	**21,020**	PZ3	Partial-60	100	100	1.200
TPPOZ60110	6 x 110	**24,863**	PZ3	Partial-70	100	100	600

• Sizes without CE

More range next page

Countersunk head chipboard screw

TP

TP-PO Z

Zinc-plated. PZ recess



Window Box

CODE	SIZE	€/BOX	PCS.	BOXES
VTPOZ30025	3 x 25	**5,379**	250	8
VTPOZ30030	3 x 30	**5,654**	250	8
VTPOZ35016	3,5 x 16	**4,527**	250	8
VTPOZ35020	3,5 x 20	**5,257**	250	8
VTPOZ35025	3,5 x 25	**5,992**	250	8
VTPOZ35030	3,5 x 30	**6,424**	250	8
VTPOZ35035	3,5 x 35	**5,249**	150	8
VTPOZ35040	3,5 x 40	**5,557**	150	8
VTPOZ35050	3,5 x 50	**5,021**	100	8
VTPOZ40016	4 x 16	**5,870**	250	8
VTPOZ40020	4 x 20	**6,854**	250	8
VTPOZ40025	4 x 25	**7,572**	250	8
VTPOZ40030	4 x 30	**6,078**	175	8
VTPOZ40035	4 x 35	**5,877**	150	8
VTPOZ40040	4 x 40	**6,449**	150	8
VTPOZ40045	4 x 45	**7,875**	150	8
VTPOZ40050	4 x 50	**5,926**	100	8
VTPOZ40060	4 x 60	**6,913**	100	8
VTPOZ45030	4,5 x 30	**6,802**	150	8
VTPOZ45035	4,5 x 35	**7,453**	150	8
VTPOZ45040	4,5 x 40	**8,231**	150	8
VTPOZ45045	4,5 x 45	**6,058**	90	8
VTPOZ45050	4,5 x 50	**7,369**	100	8
VTPOZ45060	4,5 x 60	**6,761**	80	8
VTPOZ45070	4,5 x 70	**6,241**	60	8
VTPOZ50030	5 x 30	**5,697**	100	8
VTPOZ50035	5 x 35	**6,201**	100	8
VTPOZ50040	5 x 40	**6,802**	100	8
VTPOZ50050	5 x 50	**8,303**	100	8
VTPOZ50060	5 x 60	**8,234**	80	8
VTPOZ50070	5 x 70	**4,581**	35	8
VTPOZ50080	5 x 80	**4,477**	30	8
VTPOZ50090	5 x 90	**5,207**	30	8
VTPOZ60060	6 x 60	**8,451**	60	8
VTPOZ60070	6 x 70	**5,425**	30	8
VTPOZ60080	6 x 80	**5,903**	30	8



Available in diferent coatings.
Ask for price and delivery time.

More range previous page

TP

Countersunk head chipboard screw

TP-TO

Yellow zinc-plated. TX recess





Available in diferent coatings.
Ask for price and delivery time.

WOOD



CODE	SIZE	€/100		MIN. ORDER QTY.		
TPTO30025	3 x 25	2,023	TX10	2.000	1.000	12.000
TPTO30030	3 x 30	2,337	TX10	2.000	1.000	12.000
•TPTO35015	3,5 x 15	1,717	TX15	2.000	1.000	24.000
•TPTO35017	3,5 x 17	1,790	TX15	2.000	1.000	24.000
•TPTO35020	3,5 x 20	2,080	TX15	2.000	1.000	12.000
TPTO35025	3,5 x 25	2,450	TX15	2.000	1.000	12.000
TPTO35030	3,5 x 30	2,673	TX15	2.000	1.000	12.000
TPTO35040	3,5 x 40	3,700	TX15	1.000	500	6.000
TPTO35050	3,5 x 50	4,497	TX15	1.000	500	3.000
•TPTO40020	4 x 20	2,793	TX20	2.000	1.000	12.000
•TPTO40025	4 x 25	3,230	TX20	2.000	1.000	12.000
TPTO40030	4 x 30	3,873	TX20	1.000	500	6.000
TPTO40035	4 x 35	4,407	TX20	1.000	500	6.000
TPTO40040	4 x 40	4,770	TX20	1.000	500	6.000
TPTO40045	4 x 45	5,367	TX20	1.000	500	6.000
TPTO40050	4 x 50	6,127	TX20	500	250	3.000
TPTO40060	4 x 60	6,437	TX20	500	250	3.000
TPTO40070	4 x 70	8,430	TX20	500	250	1.500
•TPTO45030	4,5 x 30	4,670	TX20	1.000	500	6.000
TPTO45035	4,5 x 35	5,057	TX20	1.000	500	6.000
TPTO45040	4,5 x 40	5,837	TX20	1.000	500	6.000
TPTO45045	4,5 x 45	6,843	TX20	500	250	3.000
TPTO45050	4,5 x 50	7,687	TX20	500	250	3.000
TPTO45060	4,5 x 60	8,827	TX20	500	250	3.000
TPTO45070	4,5 x 70	10,370	TX20	500	250	1.500

CODE	SIZE	€/100		MIN. ORDER QTY.		
•TPTO50030	5 x 30	6,013	TX25	500	250	6.000
•TPTO50035	5 x 35	6,563	TX25	500	250	6.000
TPTO50040	5 x 40	7,367	TX25	500	250	3.000
TPTO50045	5 x 45	8,347	TX25	500	250	3.000
TPTO50050	5 x 50	8,937	TX25	500	250	3.000
TPTO50060	5 x 60	10,253	TX25	500	250	1.500
TPTO50070	5 x 70	13,353	TX25	200	100	1.200
TPTO50080	5 x 80	15,430	TX25	200	100	1.200
TPTO50090	5 x 90	16,857	TX25	200	100	1.200
TPTO50100	5 x 100	18,293	TX25	200	100	1.200
TPTO50120	5 x 120	25,327	TX25	200	100	1.200
TPTO60060	6 x 60	14,270	TX30	500	250	1.500
TPTO60070	6 x 70	17,063	TX30	200	100	1.200
TPTO60080	6 x 80	21,030	TX30	200	100	1.200
TPTO60090	6 x 90	25,750	TX30	200	100	1.200
TPTO60100	6 x 100	27,713	TX30	100	100	1.200
TPTO60110	6 x 110	32,307	TX30	100	100	600
TPTO60120	6 x 120	34,743	TX30	100	100	600
TPTO60130	6 x 130	41,410	TX30	100	100	600
TPTO60140	6 x 140	45,943	TX30	100	100	600
TPTO60150	6 x 150	52,863	TX30	100	100	600
TPTO60160	6 x 160	58,533	TX30	100	100	400
TPTO60180	6 x 180	78,437	TX30	100	100	300
TPTO60200	6 x 200	94,157	TX30	100	100	300
TPTO60220	6 x 220	125,810	TX30	100	100	300

• Sizes without CE

Window Box

CODE	SIZE	€/BOX	PCS.	BOXES
VTPTO30025	3 x 25	5,934	250	8
VTPTO30030	3 x 30	6,758	250	8
VTPTO35015	3,5 x 15	5,375	250	8
VTPTO35020	3,5 x 20	6,423	250	8
VTPTO35025	3,5 x 25	7,226	250	8
VTPTO35030	3,5 x 30	8,048	250	8
VTPTO35040	3,5 x 40	6,679	150	8
VTPTO35050	3,5 x 50	5,730	100	8
VTPTO40020	4 x 20	8,410	250	8
VTPTO40025	4 x 25	10,004	250	8
VTPTO40030	4 x 30	8,366	175	8
VTPTO40035	4 x 35	7,970	150	8
VTPTO40040	4 x 40	8,616	150	8
VTPTO40045	4 x 45	9,690	150	8
VTPTO40050	4 x 50	7,584	100	8
VTPTO40060	4 x 60	7,964	100	8
VTPTO45030	4,5 x 30	8,279	150	8

CODE	SIZE	€/BOX	PCS.	BOXES
VTPTO45035	4,5 x 35	9,142	150	8
VTPTO45040	4,5 x 40	10,557	150	8
VTPTO45045	4,5 x 45	7,420	90	8
VTPTO45050	4,5 x 50	9,253	100	8
VTPTO45060	4,5 x 60	8,501	80	8
VTPTO45070	4,5 x 70	7,493	60	8
VTPTO50030	5 x 30	7,247	100	8
VTPTO50035	5 x 35	8,108	100	8
VTPTO50040	5 x 40	9,542	100	8
VTPTO50050	5 x 50	10,771	100	8
VTPTO50060	5 x 60	9,879	80	8
VTPTO50070	5 x 70	5,781	35	8
VTPTO50080	5 x 80	5,722	30	8
VTPTO50090	5 x 90	6,254	30	8
VTPTO60060	6 x 60	10,314	60	8
VTPTO60070	6 x 70	6,330	30	8
VTPTO60080	6 x 80	7,804	30	8

Countersunk head chipboard screw — TP

STAINLESS STEEL

Wood panel · Thin wood · Pinewood

TP-A2

Stainless-steel A2. PZ recess





CODE	SIZE	€/100			
TPA230016	3 x 16	**5,697**	PZ1	200	9.000
TPA230025	3 x 25	**7,283**	PZ1	200	9.000
TPA235020	3,5 x 20	**9,610**	PZ2	200	9.000
TPA235025	3,5 x 25	**10,380**	PZ2	200	9.000
TPA235030	3,5 x 30	**12,937**	PZ2	200	9.000
TPA235040	3,5 x 40	**18,390**	PZ2	200	4.800
TPA240030	4 x 30	**15,720**	PZ2	200	9.000
TPA240040	4 x 40	**18,563**	PZ2	200	4.800
TPA240050	4 x 50	**29,137**	PZ2	200	4.800
TPA245030	4,5 x 30	**18,463**	PZ2	200	4.800
TPA245050	4,5 x 50	**29,487**	PZ2	200	2.400
TPA250050	5 x 50	**37,190**	PZ2	200	2.400
TPA250070	5 x 70	**50,683**	PZ2	200	2.400

Panhead steel chipboard screw. Yellow zinc-plated. PZ recess — TR-PO

WOOD

Thin wood · Pinewood





CODE	SIZE	€/100			
TRPO30016	3 x 16	**2,157**	PZ1	1.000	24.000
TRPO30020	3 x 20	**2,433**	PZ1	1.000	12.000
TRPO35016	3,5 x 16	**2,837**	PZ2	1.000	24.000
TRPO35020	3,5 x 20	**3,277**	PZ2	1.000	12.000
TRPO35025	3,5 x 25	**3,517**	PZ2	1.000	12.000
TRPO35030	3,5 x 30	**3,880**	PZ2	1.000	12.000
TRPO35035	3,5 x 35	**4,073**	PZ2	500	6.000
TRPO40016	4 x 16	**3,597**	PZ2	1.000	12.000
TRPO40020	4 x 20	**3,763**	PZ2	1.000	12.000
TRPO40025	4 x 25	**4,317**	PZ2	1.000	12.000
TRPO40030	4 x 30	**4,853**	PZ2	500	6.000
TRPO40035	4 x 35	**5,170**	PZ2	500	6.000
TRPO40040	4 x 40	**5,967**	PZ2	500	6.000
TRPO40050	4 x 50	**7,740**	PZ2	250	3.000
TRPO45016	4,5 x 16	**4,407**	PZ2	500	12.000
TRPO45020	4,5 x 20	**4,950**	PZ2	500	8.000
TRPO45025	4,5 x 25	**5,857**	PZ2	500	6.000
TRPO45030	4,5 x 30	**6,567**	PZ2	500	6.000
TRPO45035	4,5 x 35	**7,583**	PZ2	500	6.000
TRPO45040	4,5 x 40	**7,910**	PZ2	500	3.000
TRPO45045	4,5 x 45	**8,760**	PZ2	250	3.000
TRPO50020	5 x 20	**6,620**	PZ2	500	6.000
TRPO50030	5 x 30	**7,697**	PZ2	250	6.000
TRPO50040	5 x 40	**8,983**	PZ2	250	3.000
TRPO50050	5 x 50	**11,343**	PZ2	250	3.000

DIN-571

Coach wood screw with hexagonal head

DIN-571

Zinc-plated



Available in diferent coatings.
Ask for price and delivery time.

WOOD

Thin wood Pinewood

ZINC

CODE	SIZE	€/100			
•TB05030	5 x 30	**6,720**	8	200	4.800
•TB05040	5 x 40	**8,530**	8	200	2.400
TB05050	5 x 50	**10,030**	8	200	2.400
TB05060	5 x 60	**11,327**	8	200	2.400
•TB06025	6 x 25	**7,600**	10	200	2.400
•TB06030	6 x 30	**8,433**	10	200	2.400
•TB06035	6 x 35	**9,670**	10	200	2.400
•TB06040	6 x 40	**10,397**	10	200	2.400
•TB06045	6 x 45	**11,380**	10	200	2.400
•TB06050	6 x 50	**12,437**	10	200	2.400
TB06060	6 x 60	**14,663**	10	200	1.200
TB06070	6 x 70	**16,873**	10	200	1.200
TB06080	6 x 80	**18,483**	10	200	1.200
TB06090	6 x 90	**21,770**	10	100	1.200
TB06100	6 x 100	**22,817**	10	100	1.200
TB06110	6 x 110	**30,067**	10	100	1.200
TB06120	6 x 120	**30,153**	10	100	800
TB07030	7 x 30	**13,697**	12	200	2.400
TB07040	7 x 40	**16,697**	12	200	1.600
TB07050	7 x 50	**19,387**	12	200	1.200
TB07060	7 x 60	**22,610**	12	100	1.200
TB07070	7 x 70	**25,087**	12	100	1.200
TB07080	7 x 80	**27,650**	12	100	800
TB07090	7 x 90	**28,117**	12	100	400
TB07100	7 x 100	**31,787**	12	100	600
TB07120	7 x 120	**38,867**	12	100	600
•TB08030	8 x 30	**16,210**	13	200	1.200
•TB08040	8 x 40	**19,197**	13	200	1.200
•TB08045	8 x 45	**20,143**	13	200	1.200
•TB08050	8 x 50	**22,090**	13	200	1.200
•TB08060	8 x 60	**25,217**	13	200	1.200
•TB08070	8 x 70	**28,673**	13	200	800
TB08080	8 x 80	**32,000**	13	200	800
TB08090	8 x 90	**37,473**	13	100	600
TB08100	8 x 100	**40,527**	13	100	600
TB08110	8 x 110	**41,737**	13	100	600
TB08120	8 x 120	**45,663**	13	100	600

CODE	SIZE	€/100			
TB08130	8 x 130	**50,390**	13	100	400
TB08140	8 x 140	**53,473**	13	100	400
TB08150	8 x 150	**56,310**	13	100	400
TB08160	8 x 160	**59,410**	13	100	400
TB08180	8 x 180	**77,313**	13	100	300
TB08200	8 x 200	**81,197**	13	100	300
•TB10040	10 x 40	**37,520**	17	100	600
•TB10050	10 x 50	**39,037**	17	100	600
•TB10060	10 x 60	**42,573**	17	100	600
•TB10070	10 x 70	**50,187**	17	100	600
•TB10080	10 x 80	**54,060**	17	100	400
•TB10090	10 x 90	**62,637**	17	100	400
TB10100	10 x 100	**64,997**	17	100	400
TB10110	10 x 110	**71,117**	17	50	300
TB10120	10 x 120	**78,393**	17	50	300
TB10130	10 x 130	**82,587**	17	50	300
TB10140	10 x 140	**98,573**	17	50	200
TB10150	10 x 150	**105,483**	17	50	200
TB10160	10 x 160	**112,597**	17	50	200
TB10180	10 x 180	**123,410**	17	50	150
TB10200	10 x 200	**135,750**	17	50	150
•TB12060	12 x 60	**69,660**	19	50	300
•TB12070	12 x 70	**73,457**	19	50	300
•TB12080	12 x 80	**83,560**	19	50	300
•TB12090	12 x 90	**89,047**	19	50	300
•TB12100	12 x 100	**98,993**	19	50	300
TB12120	12 x 120	**120,343**	19	50	200
TB12130	12 x 130	**129,273**	19	50	100
TB12140	12 x 140	**139,093**	19	50	100
TB12150	12 x 150	**144,037**	19	50	200
TB12160	12 x 160	**153,910**	19	50	200
TB12180	12 x 180	**184,467**	19	50	150
TB12200	12 x 200	**210,097**	19	50	150
TB12220	12 x 220	**229,183**	19	50	100
TB12240	12 x 240	**245,810**	19	50	100
TB12260	12 x 260	**269,473**	19	50	100
•TB14100	14 x 100	**176,977**	22	50	200

• Sizes without CE

Blister

CODE	SIZE	€/BAG	PCS.	BAGS
BZTB05030	5 x 30	**2,029**	4	20
BZTB05040	5 x 40	**2,029**	4	20
BZTB05050	5 x 50	**2,029**	4	20
BZTB06030	6 x 30	**2,029**	4	20
BZTB06040	6 x 40	**2,029**	4	20
BZTB06050	6 x 50	**2,029**	4	20
BZTB06060	6 x 60	**2,029**	4	20
BZTB06070	6 x 70	**2,029**	4	20
BZTB06080	6 x 80	**2,029**	4	20
BZTB07050	7 x 50	**2,029**	4	20
BZTB07060	7 x 60	**2,029**	4	20
BZTB07070	7 x 70	**2,029**	4	20
BZTB08040	8 x 40	**2,029**	4	20
BZTB08050	8 x 50	**2,029**	4	20
BZTB08060	8 x 60	**2,029**	4	20
BZTB08070	8 x 70	**2,029**	4	20
BZTB08080	8 x 80	**2,029**	4	15
BZTB08090	8 x 90	**2,029**	2	15
BZTB08100	8 x 100	**2,029**	2	15
BZTB10050	10 x 50	**2,029**	2	15
BZTB10060	10 x 60	**2,029**	2	15
BZTB10080	10 x 80	**2,029**	2	15

Window Box

CODE	SIZE	€/BOX	PCS.	BOXES
VTB05040	5 x 40	**5,198**	50	8
VTB05050	5 x 50	**6,108**	50	8
VTB06040	6 x 40	**6,469**	50	8
VTB06050	6 x 50	**6,068**	40	8
VTB06060	6 x 60	**5,315**	30	8
VTB07050	7 x 50	**5,820**	25	8
VTB07060	7 x 60	**5,541**	20	8
VTB07070	7 x 70	**5,991**	20	8
VTB07080	7 x 80	**6,320**	20	8
VTB08050	8 x 50	**5,441**	20	8
VTB08060	8 x 60	**6,217**	20	8
VTB08070	8 x 70	**7,064**	20	8
VTB08080	8 x 80	**5,910**	15	8
VTB08090	8 x 90	**4,503**	10	8
VTB08100	8 x 100	**4,846**	10	8
VTB10070	10 x 70	**6,086**	10	8
VTB10080	10 x 80	**6,455**	10	8
VTB10090	10 x 90	**7,483**	10	8
VTB10100	10 x 100	**7,880**	10	8

Coach wood screw with hexagonal head — DIN-571

STAINLESS STEEL

Thin wood Pinewood

DIN-571 A2

A2 Stainless steel



CODE	SIZE	€/100			
•TBA206040	6 x 40	**36,067**	10	100	2.400
•TBA206050	6 x 50	**42,910**	10	100	1.200
TBA206060	6 x 60	**48,797**	10	100	1.200
TBA206070	6 x 70	**55,167**	10	100	1.200
•TBA208050	8 x 50	**80,037**	13	100	1.200
•TBA208060	8 x 60	**88,080**	13	100	1.200
•TBA208070	8 x 70	**99,517**	13	100	600
TBA208080	8 x 80	**111,423**	13	100	600
•TBA210080	10 x 80	**188,553**	17	100	400

• Sizes without CE

WOOD

Thin wood Pinewood

571 TR

Full thread



CODE	SIZE	€/100			
TBR06050	6 x 50	**12,840**	10	200	1.200
TBR06060	6 x 60	**15,127**	10	200	1.200
TBR06070	6 x 70	**17,403**	10	200	1.200
TBR08050	8 x 50	**22,780**	13	200	1.200
TBR08060	8 x 60	**26,010**	13	200	800
TBR08070	8 x 70	**29,570**	13	200	800
TBR08080	8 x 80	**33,000**	13	200	800
TBR10060	10 x 60	**43,903**	17	100	600
TBR10080	10 x 80	**55,753**	17	100	400

Tamperproof screw with TX recess — INV

WOOD

Thin wood Pinewood

INV Z

Zinc-plated



CODE	SIZE	€/100		MIN. ORDER QTY.		
•INVZ6040	6 x 40	**28,723**	TX40	200	100	1.200
INVZ6050	6 x 50	**30,390**	TX40	200	100	1.200
INVZ6060	6 x 60	**32,330**	TX40	200	100	600
INVZ6070	6 x 70	**38,440**	TX40	200	100	600
•INVZ7030	7 x 30	**26,620**	TX40	200	100	1.200
•INVZ7040	7 x 40	**27,137**	TX40	200	100	1.200
INVZ7050	7 x 50	**27,483**	TX40	200	100	1.200
INVZ7060	7 x 60	**31,437**	TX40	200	100	600
INVZ7070	7 x 70	**33,312**	TX40	200	100	600
INVZ7080	7 x 80	**38,417**	TX40	200	100	600
INVZ7090	7 x 90	**44,133**	TX40	200	100	600

•Sizes without CE

Available in diferent coatings.
Ask for price and delivery time.

Blister

CODE	SIZE	€/BAG	PCS.	BAGS
BZINVZ7060	7 x 60	**2,565**	4	20
BZINVZ7070	7 x 70	**2,565**	4	20
BZINVZ7080	7 x 80	**2,565**	4	15

Window Box

CODE	SIZE	€/BOX	PCS.	BOXES
VINVZ7060	7 x 60	**6,250**	15	8
VINVZ7070	7 x 70	**6,399**	15	8

INV

Tamperproof screw with TX recess

INV A2

A2 Stainless steel



STAINLESS STEEL — Thin wood — Pinewood — A2 INOX

CODE	SIZE	€/100			
•INVA27050	7 x 50	**102,340**	TX40	100	1.200
•INVA27060	7 x 60	**118,637**	TX40	100	600
INVA27070	7 x 70	**121,547**	TX40	100	600
INVA27080	7 x 80	**134,197**	TX40	100	600

• Sizes without CE

INV N

Black



WOOD — Thin wood — Pinewood — ZF BLACK

CODE	SIZE	€/100			
•INVN6040	6 x 40	**33,967**	TX40	100	1.200
INVN6050	6 x 50	**35,057**	TX40	100	1.200
INVN6060	6 x 60	**38,830**	TX40	100	600
INVN6070	6 x 70	**42,600**	TX40	100	600
•INVN7030	7 x 30	**38,423**	TX40	100	1.200
•INVN7040	7 x 40	**40,077**	TX40	100	1.200
INVN7050	7 x 50	**44,137**	TX40	100	1.200
INVN7060	7 x 60	**48,960**	TX40	100	600
INVN7070	7 x 70	**51,743**	TX40	100	600
INVN7080	7 x 80	**56,817**	TX40	100	600
INVN7090	7 x 90	**60,880**	TX40	100	600

• Sizes without CE

Blister

CODE	SIZE	€/BAG	PCS.	BAGS
BZINVN7060	7 x 60	**2,565**	4	20
BZINVN7070	7 x 70	**2,565**	4	20
BZINVN7080	7 x 80	**2,565**	2	15

Window Box

CODE	SIZE	€/BOX	PCS.	BOXES
VINVN7060	7 x 60	**9,971**	15	8
VINVN7070	7 x 70	**10,528**	15	8

ESTRINV Z

Tamperproof star. Zinc-plated



WOOD — Zk ZAMAK — Z ZINC

CODE	SIZE	€/100	MIN. ORDER QTY.	
ESTRINV40Z	ZINC	**5,257**	400	100

ESTRINV N

Tamperproof star. Black



WOOD — Zk ZAMAK — Z BLACK

CODE	SIZE	€/100	MIN. ORDER QTY.	
ESTRINV40N	NEGRA	**6,163**	400	100

Assembly screw — TRE

TRE-Z

Zinc-plated

WOOD — Pinewood, Thin wood, Hardwood — ZINC

CODE	SIZE	€/100		
TREZ05050	Ø5 x 50	7,957	300	1.800
TREZ07050	Ø7 x 50	13,287	200	2.400

Blister

CODE	SIZE	€/BAG	PCS.	BAGS
BZTREZ05050	Ø5 x 50	2,029	4	20
BZTREZ07050	Ø7 x 50	2,029	4	20

Window Box

CODE	SIZE	€/BOX	PCS.	BOXES
VTREZ05050	Ø5 x 50	5,302	50	8
VTREZ07050	Ø7 x 50	5,100	30	8



TRE-PV

Black

WOOD — Pinewood, Thin wood, Hardwood — PV

CODE	SIZE	€/100		
TREPV05050	Ø5 x 50	9,093	300	1.800
TREPV07050	Ø7 x 50	13,287	200	2.400

Blister

CODE	SIZE	€/BAG	PCS.	BAGS
BZTREPV0550	Ø5 x 50	2,029	4	20
BZTREPV0750	Ø7 x 50	2,029	4	20

Window Box

CODE	SIZE	€/BOX	PCS.	BOXES
VTREPV05050	Ø5 x 50	5,912	50	8
VTREPV07050	Ø7 x 50	5,302	30	8



Farmer screw metal-wood — FS

FS Z

Zinc-plated

WOOD — Metal sheet - wood, Thin wood, Pinewood — ZINC

CODE	SIZE	€/100			
AFZN144819	4,8 x 19 P14	14,990	8	250	3.000
AFZN144828	4,8 x 28 P14	17,607	8	250	3.000
AFZN144835	4,8 x 35 P14	18,377	8	250	3.000



FS 3009

RAL 3009. Oxide red

WOOD — Metal sheet - wood, Thin wood, Pinewood — RAL 3009

CODE	SIZE	€/100			
AFRT144819	4,8 x 19 P14 3009	18,290	8	250	3.000
AFRT144828	4,8 x 28 P14 3009	20,297	8	250	3.000
AFRT144835	4,8 x 35 P14 3009	24,253	8	250	3.000



FS 3011

RAL 3011. Brown red

WOOD — Metal sheet - wood, Thin wood, Pinewood — RAL 3011

CODE	SIZE	€/100			
AFRD144819	4,8 x 19 P14 3011	18,290	8	250	3.000
AFRD144828	4,8 x 28 P14 3011	20,297	8	250	3.000
AFRD144835	4,8 x 35 P14 3011	24,253	8	250	3.000



FS

Farmer screw metal-wood

FS 5010

RAL 5010. Gentian blue



WOOD — Metal sheet - wood — Thin wood — Pinewood — RAL 5010

CODE	SIZE	€/100			
*AFAZ144819	4,8 x 19 P14 5010	**18,290**	8	250	3.000
*AFAZ144828	4,8 x 28 P14 5010	**20,297**	8	250	3.000
*AFAZ144835	4,8 x 35 P14 5010	**24,253**	8	250	3.000

* Availability: end of stock

FS 6005

RAL 6005. Moss green



WOOD — Metal sheet - wood — Thin wood — Pinewood — RAL 6005

CODE	SIZE	€/100			
AFVE144819	4,8 x 19 P14 6005	**18,290**	8	250	3.000
AFVE144828	4,8 x 28 P14 6005	**20,297**	8	250	3.000
AFVE144835	4,8 x 35 P14 6005	**24,253**	8	250	3.000

FS 8004

RAL 8004. Copper brown



WOOD — Metal sheet - wood — Thin wood — Pinewood — RAL 8004

CODE	SIZE	€/100			
AFMC144819	4,8 x 19 P14 8004	**18,290**	8	250	3.000
AFMC144828	4,8 x 28 P14 8004	**20,297**	8	250	3.000
AFMC144835	4,8 x 35 P14 8004	**24,253**	8	250	3.000

FS 8017

RAL 8017



WOOD — Metal sheet - wood — Thin wood — Pinewood — RAL 8017

CODE	SIZE	€/100			
AFMD144819	4,8 x 19 P14 8017	**18,290**	8	250	3.000
AFMD144828	4,8 x 28 P14 8017	**20,297**	8	250	3.000
AFMD144835	4,8 x 35 P14 8017	**24,253**	8	250	3.000

FS 8019

RAL 8019. Grey brown



WOOD — Metal sheet - wood — Thin wood — Pinewood — RAL 8019

CODE	SIZE	€/100			
AFPG144819	4,8 x 19 P14 8019	**18,290**	8	250	3.000
AFPG144828	4,8 x 28 P14 8019	**20,297**	8	250	3.000
AFPG144835	4,8 x 35 P14 8019	**24,253**	8	250	3.000

Farmer screw metal-wood — FS

WOOD

Metal sheet - wood | Thin wood | Pinewood

RAL 9006

CODE	SIZE	€/100			
AFGR144819	4,8 x 19 P14 9006	**18,290**	8	250	3.000
AFGR144828	4,8 x 28 P14 9006	**20,297**	8	250	3.000
AFGR144835	4,8 x 35 P14 9006	**24,253**	8	250	3.000

FS 9006

RAL 9006. White aluminium



WOOD

Metal sheet - wood | Thin wood | Pinewood

RAL 9010

CODE	SIZE	€/100			
AFBL144819	4,8 x 19 P14 9010	**18,290**	8	250	3.000
AFBL144828	4,8 x 28 P14 9010	**20,297**	8	250	3.000
AFBL144835	4,8 x 35 P14 9010	**24,253**	8	250	3.000

FS 9010

RAL 9010. Pure white



WOOD

Metal sheet - wood | Thin wood | Pinewood

RAL 9011

CODE	SIZE	€/100			
AFNE144819	4,8 x 19 P14 9011	**18,290**	8	250	3.000
AFNE144828	4,8 x 28 P14 9011	**20,297**	8	250	3.000
AFNE144835	4,8 x 35 P14 9011	**24,253**	8	250	3.000

FS 9011

RAL 9011. Jet black



Special extraflat cylindrical head screw with twinfast thread for aluminium. Zinc plated and TX recess — FIMA

WOOD

Metal sheet | Metal sheet - heavy profiles | Aluminium frames

ZINC

CODE	SIZE	€/100			
TFI4825	4,8 x 25	**6,463**	TX20	500	6.000
TFI4835	4,8 x 35	**7,687**	TX20	500	6.000
TFI4845	4,8 x 45	**9,890**	TX20	500	3.000
TFI4855	4,8 x 55	**11,577**	TX20	500	3.000
TFI4865	4,8 x 65	**13,757**	TX20	250	1.500
TFI4875	4,8 x 75	**16,463**	TX20	250	1.500
TFI4890	4,8 x 90	**24,643**	TX20	250	1.500



NAILS AND BOLTS

AL — Hook screw

AL-RE

Round steel hook screw



MULTI-MATERIAL



CODE	SIZE	€/100		
ALRE20015	2 x 15 x 7	**0,759**	500	22.500
ALRE25020	2,5 x 20 x 12	**1,645**	500	22.500
ALRE25025	2,5 x 25 x 12	**1,802**	500	12.000
ALRE25030	2,5 x 30 x 12	**2,342**	300	7.200
ALRE35040	3,5 x 40 x 14	**5,777**	300	7.200
ALRE35050	3,5 x 50 x 14	**6,080**	300	3.600
ALRE40060	4 x 60 x 16	**8,357**	200	2.400
ALRE40070	4 x 70 x 16	**10,519**	200	1.200
ALRE40080	4 x 80 x 16	**11,753**	100	1.200

Blister

CODE	SIZE	€/BAG	PCS.	BAGS
BZALRE20015	2 x 15 x 7	**2,029**	25	20
BZALRE25020	2,5 x 20 x 12	**2,029**	25	20
BZALRE25025	2,5 x 25 x 12	**2,029**	25	20
BZALRE25030	2,5 x 30 x 12	**2,029**	15	20
BZALRE35040	3,5 x 40 x 14	**2,029**	15	20
BZALRE35050	3,5 x 50 x 14	**2,029**	15	20
BZALRE40060	4 x 60 x 16	**2,029**	10	20
BZALRE40070	4 x 70 x 16	**2,029**	6	20
BZALRE40080	4 x 80 x 16	**2,029**	4	20

Window Box

CODE	SIZE	€/BOX	PCS.	BOXES
VALRE25020	2,5 x 20 x 12	**3,113**	125	8
VALRE25030	2,5 x 25 x 12	**3,370**	100	8
VALRE35040	3,5 x 40 x 14	**7,465**	100	8
VALRE35050	3,5 x 50 x 14	**7,588**	100	8
VALRE40060	4 x 60 x 16	**5,386**	50	8
VALRE40070	4 x 70 x 16	**6,772**	50	8
VALRE40080	4 x 80 x 16	**4,569**	30	8

AL-PL

Flat steel hook screw



MULTI-MATERIAL



CODE	SIZE	#	€/100		
ALPL45060	4,5 x 60 x 20	4	**47,188**	100	2.400
ALPL45080	4,5 x 80 x 20	5	**59,739**	100	1.200
ALPL45100	4,5 x 100 x 20	6	**82,980**	100	600
ALPL50120	5 x 120 x 25	7	**122,809**	100	400

Blister

CODE	SIZE	€/BAG	PCS.	BAGS
BZALPL45060	4,5 x 60 x 20	**3,427**	4	20
BZALPL45080	4,5 x 80 x 20	**3,427**	4	20
BZALPL45100	4,5 x 100 x 20	**3,427**	2	15
BZALPL50120	5 x 120 x 25	**3,427**	2	10

MULTI-MATERIAL

Pinewood Thin wood Hardwood

ZINC

AL-RO

Threaded hook screw



02 P. 387 Technical info

CODE	SIZE	€/100	ØD	L1	b	L2	d		
ALRO14025	14x25 (2,6 x 17 x10)	**3,317**	2,6	17	10	10	2,6	500	22.500
ALRO16030	16x30 (3,1 x 20 x 10)	**3,750**	3,1	20	12	10	3,1	300	13.500
ALRO17040	17x40 (3,5 x 29 x 13)	**5,273**	3,5	29	17	13	3,5	300	7.200
ALRO18040	18x40 (3,7 x 28 x 14)	**5,950**	3,7	28	17	14	3,7	300	7.200
ALRO18050	18x50 (3,7 x 37 x 15)	**6,463**	3,7	37	22	15	3,7	300	7.200
ALRO19050	19x50 (4,4 x 37 x 15)	**8,393**	4,4	37	22	15	4,4	200	4.800
ALRO19060	19x60 (4,4 x 46 x 17)	**9,023**	4,4	46	28	17	4,4	200	4.800
ALRO19070	19x70 (4,4 x 55 x 18)	**10,110**	4,4	55	33	18	4,4	200	2.400
ALRO20060	20x60 (5 x 44 x 20)	**11,053**	5	44	26	20	5	200	2.400
ALRO20070	20x70 (5 x 53 x 20)	**11,847**	5	53	32	20	5	200	1.600
ALRO20080	20x80 (5 x 63 x 21)	**13,270**	5	63	38	21	5	200	2.400
ALRO21080	21x80 (5,6 x 60 x 22)	**15,987**	5,6	60	36	22	5,6	200	2.400
ALRO21090	21x90 (5,6 x 70 x 22)	**17,710**	5,6	70	42	22	5,6	200	800
ALRO22100	22x100 (6 x 79 x 23)	**22,100**	6	79	47	23	6	100	1.200
ALRO22110	22x110 (6 x 86 x 23)	**24,030**	6	86	52	23	6	100	1.200
ALRO22120	22x120 (6 x 97 x 25)	**25,067**	6	97	58	25	6	50	800
ALRO23130	23x130 (7,8 x 105 x 25)	**33,933**	7,8	105	63	25	7,8	50	600

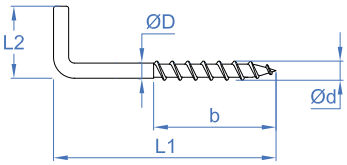

Blister

CODE	SIZE	€/BAG	PCS.	BAGS
BZALRO14025	14x25 (2,6 x 17 x10)	**2,029**	25	20
BZALRO16030	16x30 (3,1 x 20 x 10)	**2,029**	15	20
BZALRO17040	17x40 (3,5 x 29 x 13)	**2,029**	15	20
BZALRO18040	18x40 (3,7 x 28 x 14)	**2,029**	15	20
BZALRO18050	18x50 (3,7 x 37 x 15)	**2,029**	15	20
BZALRO19050	19x50 (4,4 x 37 x 15)	**2,029**	10	20
BZALRO19060	19x60 (4,4 x 46 x 17)	**2,029**	10	20
BZALRO19070	19x70 (4,4 x 55 x 18)	**2,029**	10	20
BZALRO20060	20x60 (5 x 44 x 20)	**2,029**	8	20
BZALRO20070	20x70 (5 x 53 x 20)	**2,029**	8	20
BZALRO21080	21x80 (5,6 x 60 x 22)	**2,029**	6	20
BZALRO21090	21x90 (5,6 x 70 x 22)	**2,029**	6	20
BZALRO22100	22x100 (6 x 79 x 23)	**2,029**	4	20
BZALRO22110	22x110 (6 x 86 x 23)	**2,029**	2	20
BZALRO22120	22x120 (6 x 97 x 25)	**2,029**	2	20
BZALRO23130	23x130 (7,8 x 105 x 25)	**2,029**	2	20

Window Box

CODE	SIZE	€/BOX	PCS.	BOXES
VALRO14025	14x25 (2,6 x 17 x10)	**5,544**	125	8
VALRO16030	16x30 (3,1 x 20 x 10)	**3,782**	75	8
VALRO17040	17x40 (3,5 x 29 x 13)	**5,314**	75	8
VALRO18040	18x40 (3,7 x 28 x 14)	**5,967**	75	8
VALRO18050	18x50 (3,7 x 37 x 15)	**7,813**	75	8
VALRO19050	19x50 (4,4 x 37 x 15)	**6,767**	60	8
VALRO19060	19x60 (4,4 x 46 x 17)	**7,275**	60	8
VALRO19070	19x70 (4,4 x 55 x 18)	**8,151**	60	8
VALRO20060	20x60 (5 x 44 x 20)	**8,912**	60	8
VALRO20070	20x70 (5 x 53 x 20)	**9,550**	60	8
VALRO20080	20x80 (5 x 63 x 21)	**10,697**	60	8
VALRO21080	21x80 (5,6 x 60 x 22)	**15,040**	50	8
VALRO21090	21x90 (5,6 x 70 x 22)	**16,659**	40	8
VALRO22100	22x100 (6 x 79 x 23)	**10,606**	35	8
VALRO22110	22x110 (6 x 86 x 23)	**12,185**	35	8
VALRO22120	22x120 (6 x 97 x 25)	**7,834**	20	8
VALRO23130	23x130 (7,8 x 105 x 25)	**9,423**	20	8

MULTI-MATERIAL

Pinewood Thin wood Hardwood

WHITE

AL-RO B

Threaded hook screw. White lacquered



02 P. 387 Technical info

CODE	SIZE	€/100	ØD	L1	b	L2	d		
ALROB16030	16x30 (3,1 x 20 x 10)	**8,217**	3,1	20	12	10	3,1	300	13.500
ALROB17040	17x40 (3,5 x 29 x 13)	**10,383**	3,5	29	17	13	3,5	300	7.200
ALROB18050	18x50 (3,7 x 37 x 15)	**15,663**	3,7	37	22	15	3,7	300	7.200
ALROB19060	19x60 (4,4 x 46 x 17)	**17,997**	4,4	46	28	17	4,4	200	4.800

Blister

CODE	SIZE	€/BAG	PCS.	BAGS
BZALROB1630	16x30 (3,1 x 20 x 10)	**2,565**	15	20
BZALROB1740	17x40 (3,5 x 29 x 13)	**2,565**	15	20
BZALROB1850	18x50 (3,7 x 37 x 15)	**2,565**	15	20
BZALROB1960	19x60 (4,4 x 46 x 17)	**2,565**	10	20

Window Box

CODE	SIZE	€/BOX	PCS.	BOXES
VALROB16030	16x30 (3,1 x 20 x 10)	**7,868**	75	8
VALROB17040	17x40 (3,5 x 29 x 13)	**9,548**	75	8
VALROB18050	18x50 (3,7 x 37 x 15)	**13,787**	75	8
VALROB19060	19x60 (4,4 x 46 x 17)	**10,998**	50	8

HB Screw eyes

AL-HC

Closed steel eye bolt



02 P. 386 Technical info

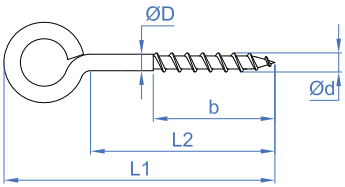

MULTI-MATERIAL

Hardwood Thin wood Pinewood

ZINC

CODE	SIZE	€/100	ØD	L1	b	L2	ØD		
ALHC14025	14x25 (2,6 x 18 x 7)	**3,317**	2,6	18	7	10	2,6	500	22.500
ALHC16030	16x30 (3,1 x 22 x 9)	**3,750**	3,1	22	9	12	3,1	300	13.500
ALHC17040	17x40 (3,5 x 28 x 10)	**5,273**	3,5	28	10	14	3,5	300	7.200
ALHC18040	18x40 (4,1 x 30 x 10)	**5,950**	4,1	30	10	15	4,1	300	7.200
ALHC18050	18x50 (3,7 x 39 x 12)	**6,463**	3,7	39	12	20	3,7	300	7.200
ALHC19050	19x50 (4,4 x 35 x 12)	**8,393**	4,4	35	12	18	4,4	200	4.800
ALHC19060	19x60 (4,4 x 42 x 15)	**9,023**	4,4	42	15	22	4,4	200	4.800
ALHC19070	19x70 (4,4 x 44 x 15)	**10,110**	4,4	44	15	24	4,4	200	4.800
ALHC20050	20x50 (5 x 39 x 12)	**10,263**	5	39	12	19	5	200	4.800
ALHC20060	20x60 (5 x 41 x 12)	**11,053**	5	41	12	21	5	200	3.200
ALHC20070	20x70 (5 x 48 x 14)	**11,847**	5	48	14	26	5	200	2.400
ALHC20080	20x80 (5 x 54 x 18)	**13,270**	5	54	18	30	5	200	2.400
ALHC21070	21x70 (5,6 x 49 x 14)	**14,630**	5,6	49	14	23	5,6	200	2.400
ALHC21080	21x80 (5,6 x 54 x 14)	**15,987**	5,6	54	14	28	5,6	200	2.400
ALHC21090	21x90 (5,6 x 61 x 14)	**17,710**	5,6	61	14	32	5,6	200	1.200
ALHC21100	21x100 (5,6 x 66 x 18)	**17,733**	5,6	66	18	37	5,6	100	1.200
ALHC22110	22x110 (6 x 73 x 24)	**24,030**	6	73	24	43	6	100	1.200
ALHC22120	22x120 (6 x 81 x 29)	**25,067**	6	81	29	48	6	50	600
ALHC23130	23x130 (6,3 x 89 x 35)	**33,933**	6,3	89	35	55	6,3	50	600

Blister

CODE	SIZE	€/BAG	PCS.	BAGS
BZALHC14025	14x25 (2,6 x 18 x 7)	**2,029**	25	20
BZALHC16030	16x30 (3,1 x 22 x 9)	**2,029**	15	20
BZALHC17040	17x40 (3,5 x 28 x 10)	**2,029**	15	20
BZALHC18040	18x40 (4,1 x 30 x 10)	**2,029**	15	20
BZALHC18050	18x50 (3,7 x 39 x 12)	**2,029**	15	20
BZALHC19050	19x50 (4,4 x 35 x 12)	**2,029**	10	20
BZALHC19060	19x60 (4,4 x 42 x 15)	**2,029**	10	20
BZALHC19070	19x70 (4,4 x 44 x 15)	**2,029**	10	20
BZALHC20060	20x60 (5 x 41 x 12)	**2,029**	8	20
BZALHC20070	20x70 (5 x 48 x 14)	**2,029**	8	20
BZALHC20080	20x80 (5 x 54 x 18)	**2,029**	8	15
BZALHC21080	21x80 (5,6 x 54 x 14)	**2,029**	6	15
BZALHC21090	21x90 (5,6 x 61 x 14)	**2,029**	6	15
BZALHC21100	21x100 (5,6 x 66 x 18)	**2,029**	4	20
BZALHC22110	22x110 (6 x 76 x 24)	**2,029**	2	20
BZALHC22120	22x120 (6 x 81 x 29)	**2,029**	2	20
BZALHC23130	23x130 (6,3 x 89 x 35)	**2,029**	2	20

Window Box

CODE	SIZE	€/BOX	PCS.	BOXES
VALHC14025	14x25 (2,6 x 18 x 7)	**5,544**	125	8
VALHC16030	16x30 (3,1 x 22 x 9)	**3,782**	75	8
VALHC17040	17x40 (3,5 x 28 x 10)	**5,314**	75	8
VALHC18040	18x40 (4,1 x 30 x 10)	**5,967**	75	8
VALHC18050	18x50 (3,7 x 39 x 12)	**7,813**	75	8
VALHC19050	19x50 (4,4 x 35 x 12)	**6,767**	60	8
VALHC19060	19x60 (4,4 x 42 x 15)	**7,275**	60	8
VALHC19070	19x70 (4,4 x 44 x 15)	**8,151**	60	8
VALHC20050	20x50 (5 x 39 x 12)	**8,274**	60	8
VALHC20060	20x60 (5 x 41 x 12)	**8,912**	60	8
VALHC20070	20x70 (5 x 48 x 14)	**9,550**	60	8
VALHC20080	20x80 (5 x 54 x 18)	**10,697**	60	8
VALHC21070	21x70 (5,6 x 49 x 14)	**13,689**	60	8
VALHC21080	21x80 (5,6 x 54 x 14)	**15,040**	50	8
VALHC21090	21x90 (5,6 x 61 x 14)	**16,659**	40	8
VALHC21100	21x100 (5,6 x 66 x 18)	**9,027**	35	8
VALHC22110	22x110 (6 x 73 x 24)	**12,185**	20	8
VALHC22120	22x120 (6 x 81 x 29)	**7,834**	20	8
VALHC23130	23x130 (6,3 x 89 x 35)	**9,423**	20	8

AL-HC B

Closed steel eye bolt. White lacquered



02 P. 387 Technical info

MULTI-MATERIAL

Hardwood Thin wood Pinewood

WHITE

CODE	SIZE	€/100	ØD	L1	b	L2	ØD		
ALHCB16030	16x30 (3,1 x 22 x 9)	**8,217**	3,1	22	9	12	3,1	300	13.500
ALHCB17040	17x40 (3,5 x 28 x 10)	**10,383**	3,5	28	10	14	3,5	300	7.200
ALHCB18050	18x50 (3,7 x 39 x 12)	**15,663**	3,7	39	12	20	3,7	300	7.200
ALHCB19060	19x60 (4,4 x 42 x 15)	**17,997**	4,4	42	15	22	4,4	200	4.800

Blister

CODE	SIZE	€/BAG	PCS.	BAGS
BZALHCB1630	16x30 (3,1 x 22 x 9)	**2,565**	15	20
BZALHCB1740	17x40 (3,5 x 28 x 10)	**2,565**	15	20
BZALHCB1850	18x50 (3,7 x 39 x 12)	**2,565**	15	20
BZALHCB1960	19x60 (4,4 x 42 x 15)	**2,565**	10	20

MULTI-MATERIAL



ZINC

AL-HA

Open steel eye bolt



02 P. 386 Technical info

CODE	SIZE	€/100	ØD	L1	B	L2	ØD		
ALHA14025	14x25 (2,6 x 18 x 7)	**3,317**	2,6	18	7	10	2,6	500	22.500
ALHA16030	16x30 (3,1 x 22 x 9)	**3,750**	3,1	22	9	12	3,1	300	13.500
ALHA17040	17x40 (3,5 x 26 x 10)	**5,273**	3,5	26	10	14	3,5	300	7.200
ALHA18040	18x40 (4,1 x 29 x 10)	**5,950**	4,1	29	10	15	4,1	300	7.200
ALHA18050	18x50 (4,1 x 34 x 12)	**6,463**	4,1	34	12	20	4,1	300	3.600
ALHA19050	19x50 (4,4 x 33 x 12)	**8,393**	4,4	33	12	18	4,4	200	4.800
ALHA19060	19x60 (4,4 x 39 x 15)	**9,023**	4,4	39	15	22	4,4	200	4.800
ALHA19070	19x70 (4,4 x 41 x 15)	**10,110**	4,4	41	15	24	4,4	200	2.400
ALHA20050	20x50 (5 x 35 x 12)	**10,263**	5	35	12	19	5	200	2.400
ALHA20060	20x60 (5 x 39 x 12)	**11,053**	5	39	12	21	5	200	2.400
ALHA20070	20x70 (5 x 44 x 14)	**11,847**	5	44	14	26	5	200	2.400
ALHA20080	20x80 (5 x 50 x 18)	**13,270**	5	50	18	30	5	200	2.400
ALHA21070	21x70 (5,6 x 43 x 14)	**14,630**	5,6	43	14	23	5,6	200	2.400
ALHA21080	21x80 (5,6 x 48 x 14)	**15,987**	5,6	48	14	28	5,6	200	2.400
ALHA21090	21x90 (5,6 x 56 x 14)	**17,710**	5,6	56	14	32	5,6	200	1.200
ALHA21100	21x100 (5,6 x 61 x 18)	**17,733**	5,6	61	18	37	5,6	100	1.200
ALHA22110	22x110 (6 x 69 x 24)	**24,030**	6	69	24	43	6	100	1.200
ALHA22120	22x120 (6 x 74 x 29)	**25,067**	6	74	29	48	6	50	600
ALHA23130	23x130 (6,3 x 82 x 35)	**33,933**	6,3	82	35	55	6,3	50	600

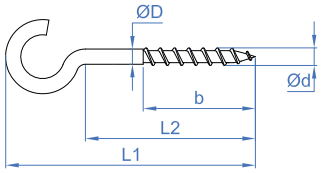

Blister

CODE	SIZE	€/BAG	PCS.	BAGS
BZALHA14025	14x25 (2,6 x 18 x 7)	**2,029**	25	20
BZALHA16030	16x30 (3,1 x 22 x 9)	**2,029**	15	20
BZALHA17040	17x40 (3,5 x 26 x 10)	**2,029**	15	20
BZALHA18040	18x40 (4,1 x 29 x 10)	**2,029**	15	20
BZALHA18050	18x50 (3,7 x 34 x 12)	**2,029**	15	20
BZALHA19050	19x50 (4,4 x 33 x 12)	**2,029**	10	20
BZALHA19060	19x60 (4,4 x 39 x 15)	**2,029**	10	20
BZALHA19070	19x70 (4,4 x 41 x 15)	**2,029**	10	20
BZALHA20060	20x60 (5 x 39 x 12)	**2,029**	8	20
BZALHA20070	20x70 (5 x 44 x 14)	**2,029**	8	20
BZALHA20080	20x80 (5 x 50 x 18)	**2,029**	8	20
BZALHA21080	21x80 (5,6 x 48 x 14)	**2,029**	6	20
BZALHA21090	21x90 (5,6 x 56 x 14)	**2,029**	6	20
BZALHA21100	21x100 (5,6 x 61 x 18)	**2,029**	5	15
BZALHA22110	22x110 (6 x 69 x 24)	**2,029**	2	15
BZALHA22120	22x120 (6 x 74 x 29)	**2,029**	2	15
BZALHA23130	23x130 (6,3 x 89 x 35)	**2,029**	2	15

Window Box

CODE	SIZE	€/BOX	PCS.	BOXES
VALHA14025	14x25 (2,6 x 18 x 7)	**5,544**	125	8
VALHA16030	16x30 (3,1 x 22 x 9)	**3,782**	75	8
VALHA17040	17x40 (3,5 x 26 x 10)	**5,314**	75	8
VALHA18040	18x40 (4,1 x 29 x 10)	**5,967**	75	8
VALHA18050	18x50 (3,7 x 34 x 12)	**7,813**	75	8
VALHA19050	19x50 (4,4 x 33 x 12)	**6,767**	60	8
VALHA19060	19x60 (4,4 x 39 x 15)	**7,275**	60	8
VALHA19070	19x70 (4,4 x 41 x 15)	**8,151**	60	8
VALHA20050	20x50 (5 x 35 x 12)	**8,274**	60	8
VALHA20060	20x60 (5 x 39 x 12)	**8,912**	60	8
VALHA20070	20x70 (5 x 44 x 14)	**9,550**	60	8
VALHA20080	20x80 (5 x 50 x 18)	**10,697**	60	8
VALHA21070	21x70 (5,6 x 43 x 14)	**13,689**	60	8
VALHA21080	21x80 (5,6 x 48 x 14)	**15,040**	50	8
VALHA21090	21x90 (5,6 x 56 x 14)	**16,659**	40	8
VALHA21100	21x100 (5,6 x 61 x 18)	**9,027**	35	8
VALHA22110	22x110 (6 x 69 x 24)	**12,185**	20	8
VALHA22120	22x120 (6 x 74 x 29)	**7,834**	20	8
VALHA23130	23x130 (6,3 x 82 x 35)	**9,423**	20	8

MULTI-MATERIAL



WHITE

AL-HA B

Open steel eye bolt. White lacquered



02 P. 386 Technical info

CODE	SIZE	€/100	ØD	L1	b	L2	ØD		
ALHAB16030	16x30 (3,1 x 22 x 9)	**8,217**	3,1	22	9	12	3,1	300	13.500
ALHAB17040	17x40 (3,5 x 26 x 10)	**10,383**	3,5	26	10	14	3,5	300	7.200
ALHAB18050	18x50 (4,1 x 34 x 12)	**15,663**	4,1	34	12	20	4,1	300	7.200
ALHAB19060	19x60 (4,4 x 39 x 15)	**17,997**	4,4	39	15	22	4,4	200	4.800

Blister

CODE	SIZE	€/BAG	PCS.	BAGS
BZALHAB1630	16x30 (3,1 x 22 x 9)	**2,565**	15	20
BZALHAB1740	17x40 (3,5 x 26 x 10)	**2,565**	15	20
BZALHAB1850	18x50 (4,1 x 34 x 12)	**2,565**	15	20
BZALHAB1960	19x60 (4,4 x 39 x 15)	**2,565**	10	20

Window Box

CODE	SIZE	€/BOX	PCS.	BOXES
VALHAB16030	16x30 (3,1 x 22 x 9)	**7,868**	75	8
VALHAB17040	17x40 (3,5 x 26 x 10)	**9,548**	75	8
VALHAB18050	18x50 (4,1 x 34 x 12)	**13,787**	75	8
VALHAB19060	19x60 (4,4 x 39 x 15)	**10,998**	50	8

HB Screw eyes

HC-RM

Closed-end nut metric thread with screw



MULTI-MATERIAL

Hardwood Thin wood Pinewood

CODE	SIZE	€/100		
HCRM03026	3 x 26	**31,540**	100	4.500
HCRM04035	4 x 35	**35,043**	100	2.400
HCRM05037	5 x 37	**41,853**	100	1.200
HCRM06050	6 x 50	**84,683**	100	1.200
HCRM08060	8 x 60	**97,337**	100	600
HCRM10065	10 x 65	**175,203**	50	300
HCRM12075	12 x 75	**233,603**	50	150

Blister

CODE	SIZE	€/BAG	PCS.	BAGS
BZHCRM03026	3 x 26	**2,029**	15	20
BZHCRM04035	4 x 35	**2,029**	15	20
BZHCRM05037	5 x 37	**2,029**	8	20
BZHCRM06050	6 x 50	**2,029**	6	20
BZHCRM08060	8 x 60	**2,029**	2	20
BZHCRM10065	10 x 65	**2,029**	2	20

HA-RM

Open end nut metric thread with screw



MULTI-MATERIAL

Hardwood Thin wood Pinewood

CODE	SIZE	€/100		
HARM03026	3 x 26	**31,540**	100	4.500
HARM04035	4 x 35	**35,043**	100	2.400
HARM05037	5 x 37	**41,853**	100	1.200
HARM06050	6 x 50	**84,683**	100	1.200
HARM08060	8 x 60	**97,337**	50	300

Blister

CODE	SIZE	€/BAG	PCS.	BAGS
BZHARM03026	3 x 26	**2,029**	15	20
BZHARM04035	4 x 35	**2,029**	15	20
BZHARM05037	5 x 37	**2,029**	8	20
BZHARM06050	6 x 50	**2,029**	6	20
BZHARM08060	8 x 60	**2,029**	2	20

Nails PC

MULTI-MATERIAL

Hardwood Thin wood Pinewood

ZINC

PA-CP

Flat head steel nails



CODE	SIZE	€/100		
PACP22520	2,25 x 20	**1,257**	500	22.500
PACP22525	2,25 x 25	**1,493**	500	22.500
PACP22530	2,25 x 30	**1,723**	500	12.000
PACP25040	2,50 x 40	**2,813**	500	12.000
PACP25050	2,50 x 50	**2,920**	500	6.000
PACP29050	2,90 x 50	**4,193**	300	3.600
PACP29060	2,90 x 60	**4,907**	300	3.600
PACP29070	2,90 x 70	**5,633**	300	2.400
PACP34030	3,40 x 30	**3,350**	500	4.000
PACP34040	3,40 x 40	**4,063**	500	6.000
PACP34050	3,40 x 50	**6,000**	100	4.500
PACP34060	3,40 x 60	**6,450**	100	2.400
PACP34070	3,40 x 70	**7,343**	100	2.400
PACP34080	3,40 x 80	**8,557**	100	1.600

Blister

CODE	SIZE	€/BAG	PCS.	BAGS
BZPACP22520	2,25 x 20	**2,565**	50	20
BZPACP22525	2,25 x 25	**2,565**	50	20
BZPACP22530	2,25 x 30	**2,565**	50	20
BZPACP25040	2,50 x 40	**2,565**	35	20
BZPACP25050	2,50 x 50	**2,565**	30	20
BZPACP29060	2,90 x 60	**2,565**	20	20
BZPACP29070	2,90 x 70	**2,565**	20	20
BZPACP34040	3,40 x 40	**2,565**	20	20
BZPACP34050	3,40 x 50	**2,565**	10	20
BZPACP34060	3,40 x 60	**2,565**	10	20
BZPACP34070	3,40 x 70	**2,565**	10	20

WOOD

Hardwood Thin wood Pinewood

Cu COPPER

PA-CC

Copper-plated lead bit conical head



CODE	SIZE	€/100		
PACC15015	1,5 x 15	**0,477**	800	36.000
PACC15020	1,5 x 20	**0,597**	800	36.000
PACC15025	1,5 x 25	**0,837**	500	22.500
PACC20025	2 x 25	**1,143**	500	22.500
PACC20030	2 x 30	**1,293**	500	12.000
PACC20035	2 x 35	**1,483**	500	12.000
PACC20040	2 x 40	**1,667**	500	12.000
PACC20045	2 x 45	**1,947**	500	6.000
PACC20050	2 x 50	**2,127**	500	6.000

Blister

CODE	SIZE	€/BAG	PCS.	BAGS
BZPACC15015	1,5 x 15	**2,029**	75	20
BZPACC15020	1,5 x 20	**2,029**	50	20
BZPACC15025	1,5 x 25	**2,029**	50	20
BZPACC20025	2 x 25	**2,029**	50	20
BZPACC20030	2 x 30	**2,029**	50	20
BZPACC20035	2 x 35	**2,029**	50	20
BZPACC20040	2 x 40	**2,029**	35	20
BZPACC20045	2 x 45	**2,029**	35	20
BZPACC20050	2 x 50	**2,029**	30	20

Window Box

CODE	SIZE	€/BOX	PCS.	BOXES
VPACC15015	1,5 x 15	**2,008**	240	8
VPACC15020	1,5 x 20	**2,292**	240	8
VPACC15025	1,5 x 25	**2,031**	150	8
VPACC20025	2 x 25	**2,664**	150	8
VPACC20030	2 x 30	**2,917**	150	8
VPACC20035	2 x 35	**3,334**	150	8
VPACC20040	2 x 40	**3,751**	150	8
VPACC20045	2 x 45	**4,167**	150	8
VPACC20050	2 x 50	**4,375**	150	8

PC Nails

PA-CX

Brass bit convex head



WOOD

Hardwood Thin wood Pinewood

BRASS

Blister

CODE	SIZE	€/BAG	PCS.	BAGS
BZPACX11010	1,1 x 10	2,565	75	20
BZPACX13012	1,3 x 12	2,565	50	20
BZPACX13020	1,3 x 20	2,565	40	20
BZPACX15016	1,5 x 16	2,565	35	20
BZPACX15025	1,5 x 25	2,565	20	20
BZPACX18030	1,8 x 30	2,565	20	20

GM-Z

U nail



WOOD

Hardwood Thin wood Pinewood

ZINC

CODE	SIZE	€/100		
GMZ08012	8 x 12	0,477	800	36.000
GMZ10016	10 x 16	0,837	800	19.200
GMZ12020	12 x 20	1,430	800	19.200
GMZ15026	15 x 26	3,213	600	7.200
GMZ17030	17 x 30	5,237	600	7.200
GMZ19035	19 x 35	7,977	400	4.800

Blister

CODE	SIZE	€/BAG	PCS.	BAGS
BZGMZ08012	8 x 12	2,029	50	20
BZGMZ10016	10 x 16	2,029	40	20
BZGMZ12020	12 x 20	2,029	50	20
BZGMZ15026	15 x 26	2,029	40	20
BZGMZ17030	17 x 30	2,029	25	20
BZGMZ19035	19 x 35	2,029	15	20

Window Box

CODE	SIZE	€/BOX	PCS.	BOXES
VGMZ10016	10 x 16	3,025	240	8
VGMZ15026	15 x 26	8,126	200	8
VGMZ19035	19 x 35	9,584	100	8

CF-B

Easy picture hook



MULTI-MATERIAL

Hardwood Thin wood Pinewood Cartón yeso

NYLON

CODE	COLOR	€/100		
CFBL		13,413	200	9.000

Blister

CODE	COLOR	€/BAG	PCS.	BAGS
BZCFBL		2,565	10	20

Window Box

CODE	COLOR	€/BOX	PCS.	BOXES
VCFBL		25,186	150	8

* Applicator included in the blister and window box packaging

WOOD — Hardwood, Thin wood, Pinewood — NYLON

SV-NB

White wing grip screw



CODE	SIZE	€/100		
SVNB01	Small	12,473	300	3.600
SVNB02	Large	17,007	200	2.400

Blister

CODE	SIZE	€/BAG	PCS.	BAGS
BZSVNB01	Small	3,427	10	20
BZSVNB02	Large	3,427	8	20

Window Box

CODE	SIZE	€/BOX	PCS.	BOXES
VSVNB01	Small	13,567	90	8
VSVNB02	Large	10,664	50	8

WOOD — Hardwood, Thin wood, Pinewood — NYLON

SV-NM

Brown wing grip screw



CODE	SIZE	€/100		
SVNM01	Small	12,473	300	3.600
SVNM02	Large	17,007	200	2.400

Blister

CODE	SIZE	€/BAG	PCS.	BAGS
BZSVNM01	Small	3,427	10	20
BZSVNM02	Large	3,427	8	20

Window Box

CODE	SIZE	€/BOX	PCS.	BOXES
VSVNM01	Small	13,567	90	8
VSVNM02	Large	10,664	50	8

WOOD — Hardwood, Thin wood, Pinewood — NYLON

SV-C

2 bit wing grip screw



CODE	COLOR	€/100		
SVCBL		17,007	300	3.600
SVCMA		17,007	300	3.600

Blister

CODE	COLOR	€/BAG	PCS.	BAGS
BZSVCBL		3,427	10	20
BZSVCMA		3,427	10	20

Window Box

CODE	COLOR	€/BOX	PCS.	BOXES
VSVCBL		17,962	90	8
VSVCMA		17,962	90	8

MULTI-REFERENCE CASES

PROFESSIONAL CASE: WOOD CHIPBOARD SCREW + BITS



2.008 pcs.
COD. **MLTPPOP101**

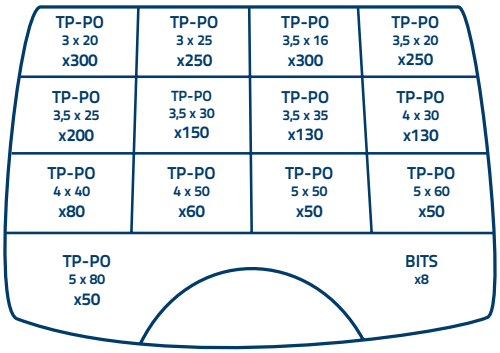

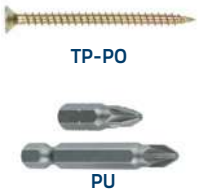

CODE	CONTENT	N° PIECES	€/1 pc.
MLTPPOP101	TP-PO + BITS	2.008	**65,359**

CHARACTERISTICS:

- High quality multi-product case
- Size: 31.2 x 23.8 x 5.1 cm. (Width x Depth x Height)
- Ergonomic and easy to use
- Stackable
- Up to 21 configurable spaces
- Adjustable dividers
- Ribbed lid to avoid screws mixing
- Strong, resistant closing mechanism

MULTI-PRODUCT PROFESSIONAL CASE



670 pcs.
COD. **MLTBOP101**

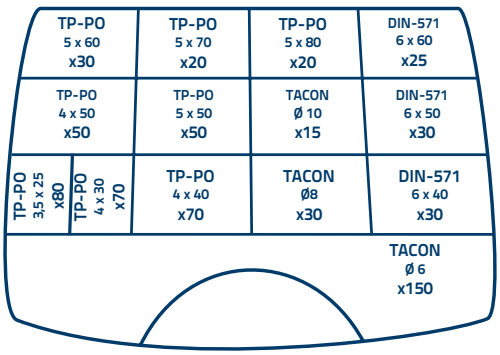



CODE	CONTENT	N° PIECES	€/1 pc.
MLTBOP101	TP-PO + DIN-571 + TACON	670	**64,191**

CHARACTERISTICS:

- High quality multi-product case
- Size: 31.2 x 23.8 x 5.1 cm. (Width x Depth x Height)
- Ergonomic and easy to use
- Stackable
- Up to 21 configurable spaces
- Adjustable dividers
- Ribbed lid to avoid screws mixing
- Strong, resistant closing mechanism

MULTI-REFERENCE CASES

TRANSPARENT CASE

CHARACTERISTICS:

- Three compositions adapted to the needs of each customer. (See below).
- Three sizes available for each composition.
- May be hung on shelf. Has a highly resistant hanger.
- Ideal compositions to increase impulse purchases at the point of sale.
- Ribbed lid to avoid screws mixing.

SIZES



LARGE
29,5 x 18,5 x 4,5 cms.
(Width x Depth x Height)



MEDIUM
23,5 x 14,5 x 4 cms.
(Width x Depth x Height)



SMALL
16 x 10,5 x 3,5 cms.
(Width x Depth x Height)

COMPOSITIONS:

WOOD



TP-PO



PU-PO

CODE	CONTENT	SIZE	N° PIECES	€/1 pc.
MLTPPOT101	TP-PO + BITS	SMALL	407	**16,914**
MLTPPOT201	TP-PO + BITS	MEDIUM	902	**31,406**
MLTPPOT301	TP-PO + BITS	LARGE	1.742	**50,677**

MULTI-PRODUCT



TACON



AL-RO



AL-HA



AL-HC



TP-PO Z



DIN-571

CODE	CONTENT	SIZE	N° PIECES	€/1 pc.
MLMULT101	MULTI-PRODUCT	SMALL	165	**16,914**
MLMULT201	MULTI-PRODUCT	MEDIUM	415	**31,406**
MLMULT301	MULTI-PRODUCT	LARGE	1.155	**49,772**

LAMINATED PLASTERBOARD



AL-HC



AL-RO



AL-HA

TP-PO Z



ANCLA



IN-CO



T4S

TAPLANY



TAPLAME
+ DIN-7981

CODE	CONTENT	SIZE	N° PIECES	€/1 pc.
MLPLAT101	MULTI-PRODUCT	SMALL	130	**16,914**
MLPLAT201	MULTI-PRODUCT	MEDIUM	295	**31,406**
MLPLAT301	MULTI-PRODUCT	LARGE	455	**49,772**



TIMBER CONNECTORS

SO

Perforated supports

SO-UO

With sealing orifice

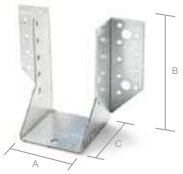

WOOD

Thin wood Pinewood Hardwood

CODE	A x B x C	€/100	HOLE NUM	HOLES Ø	THICKNESS	
SOU004110	40 x 110 x 80	**545,313**	4/1/22	11/7/4,6	2	25
SOU006100	60 x 100 x 80	**548,870**	4/1/22	11/7/4,6	2	25
SOU007125	70 x 125 x 80	**606,157**	4/1/28	11/7/4,6	2	25
SOU008120	80 x 120 x 80	**621,310**	4/1/28	11/7/4,6	2	25
SOU010140	100 x 140 x 80	**738,810**	4/1/34	11/7/4,6	2	10

SO-UR

Variable width with sealing orifice

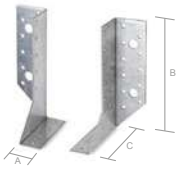

WOOD

Thin wood Pinewood Hardwood

CODE	A x B x C	€/100	HOLE NUM	HOLES Ø	THICKNESS	
SOUR30140DR	26 x 140 x 76	**543,270**	2/20	11/4,5	2	25
SOUR30140IZ	26 x 140 x 76	**543,270**	2/20	11/4,5	2	25

SC

Angled brackets for wood connectors

SC-EI

For assembly, perforated with equal holes

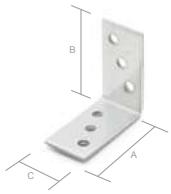

WOOD

Thin wood Pinewood Hardwood

CODE	A x B x C	€/100	HOLE NUM	HOLES Ø	THICKNESS	
SCEI040402	40 x 40 x 20	**73,637**	6	4,5	2	100
SCEI040404	40 x 40 x 40	**115,720**	8	4,6	2	50
SCEI040406	40 x 40 x 60	**189,450**	12	4,6	2,5	50
SCEI050504	50 x 50 x 40	**133,603**	8	4,5	2	50
SCEI060604	60 x 60 x 40	**179,327**	12	5	2,5	50
SCEI060606	60 x 60 x 60	**227,523**	18	5	2,5	50
SCEI060608	60 x 60 x 80	**401,597**	20	4,6	2,5	25
SCEI070704	75 x 75 x 40	**248,427**	12	4,6	2	50
SCEI080808	80 x 80 x 80	**463,733**	28	4,6	2,5	25
SCEI101004	100 x 100 x 40	**294,900**	14	4,6	2	50
SCEI101010	100 x 100 x 100	**729,730**	46	4,6	2,5	25

SC-ED

For assembly, perforated with unequal holes

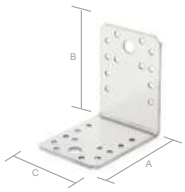

WOOD

Thin wood Pinewood Hardwood

CODE	A x B x C	€/100	HOLE NUM	HOLES Ø	THICKNESS	
SCED050503	50 x 50 x 35	**131,663**	2/12	11/4,5	2,5	50
SCED060604	60 x 60 x 45	**206,307**	2/12	10,4/4,8	2,5	50
SCED070705	70 x 70 x 55	**277,633**	2/20	10,4/4,6	2,5	50
SCED090904	90 x 90 x 40	**295,500**	4/16	10,4/4,6	3	50
SCED090906	90 x 90 x 65	**297,467**	5/15	12,8/4,6	2,5	25
SCED101009	105 x 105 x 90	**601,630**	5/29	12,8/4,6	3	25

HIGH PERFORMANCE CHIPBOARD SCREW FOR WOOD
TEX
Pag. 172

Sits perfectly level on any surface.

Lessens possibility of wood cracking

Angled brackets for wood connectors

SC

SC-LD

For equal holes assembly

WOOD — Thin wood, Pinewood, Hardwood

CODE	A x B x C	€/100	HOLE NUM	HOLES Ø	THICKNESS	
SCLD040606	60 x 60 x 40	**292,383**	2/13	11/5	2,5	50
SCLD060806	60 x 80 x 60	**371,423**	3/18	11/5	2,5	50



SC-GA

Big angle for corners

WOOD — Thin wood, Pinewood, Hardwood

CODE	A x B x C	€/100	HOLE NUM	HOLES Ø	THICKNESS	
SCGA100404	40 x 40 x 100	**304,373**	16	5	2	25

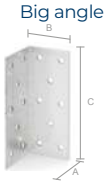

SC-RF

Reinforced

WOOD — Thin wood, Pinewood, Hardwood

CODE	A x B x C	€/100	HOLE NUM	HOLES Ø	THICKNESS	
SCRF070705	70 x 70 x 55	**281,460**	2/12	2/12	2	50
SCRF070605	77 x 64 x 50	**249,333**	2/10	11/4,6	2,5	50
SCRF090906	90 x 90 x 65	**355,775**	2/24	11/4,5	2,5	25
SCRF101009	100 x 100 x 90	**616,274**	4/26	13,4/4,6	3	25
SCRF151506	150 x 150 x 65	**581,590**	3/13/1/15	11/5/11x32/5	2,5	25



SC-RG

Adjustable

WOOD — Thin wood, Pinewood, Hardwood

CODE	A x B x C	€/100	HOLE NUM	HOLES Ø	THICKNESS	
SCRG090505	50 x 90 x 50	**300,830**	3/15	11/4,6	2,5	50
SCRG090508	50 x 90 x 80	**421,730**	5/16	13/4,6	2,5	50



SC-AS

Asymmetric, right or left side

WOOD — Thin wood, Pinewood, Hardwood

CODE	A x B x C	€/100	HOLE NUM	HOLES Ø	THICKNESS	
SCAS3317DR	32 x 100 x 170	**217,707**	20	5	2	50
SCAS3317IZ	32 x 100 x 170	**217,707**	20	5	2	50

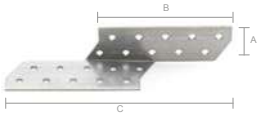

SC-CE

For concrete

WOOD — Thin wood, Pinewood, Hardwood

CODE	Z T	€/100	HOLE NUM	HOLES Ø	THICKNESS	
SCCE200404	40 x 200 x 40	**342,327**	18+1	4,5/11	2	10

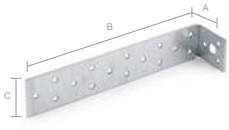

SC

Angled brackets for wood connectors

SC-OB

Yellow zinc-plated for chairs with beveled holes on both sides

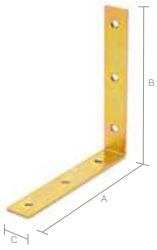

WOOD — Thin wood, Pinewood, Hardwood — B YELLOW

CODE	A x B x C	€/100	HOLE NUM	HOLES Ø	THICKNESS	
SCOB020214	25 x 25 x 15	**54,180**	4	4	1,8	100
SCOB030314	30 x 30 x 15	**62,253**	4	4,6	2	100
SCOB040415	40 x 40 x 15	**72,677**	4	4,5	1,8	100
SCOB050515	50 x 50 x 15	**81,713**	4	5	2	100
SCOB060618	60 x 60 x 16	**89,973**	4	5	2	100
SCOB070718	75 x 75 x 18	**117,920**	4	5,2	2	50
SCOB090920	90 x 90 x 20	**154,227**	4	6,5	2	50
SCOB101020	100 x 100 x 20	**175,630**	6	5,5	2	40
SCOB121222	125 x 125 x 22	**281,703**	6	5,5	2,5	40

NEW SC-OZ

Zinc-plated for chairs with beveled holes on both sides



WOOD — Thin wood, Pinewood, Hardwood — Z ZINC

CODE	SIZE	€/100	HOLE NUM	
SCOZ151525	150 x 150 x 25	**411,373**	6	10

SC-CD Z

Large angle, unequal-sided, zinc plated



WOOD — Thin wood, Pinewood, Hardwood — Z ZINC

CODE	A x B x C	€/100	HOLE NUM	HOLES Ø	THICKNESS	
SCCDZ402575	25 x 40 x 75	**269,890**	5	4,6	2	20

SC-CI

Yellow zinc-plated, large and equal-sided

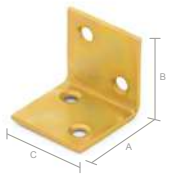

WOOD — Thin wood, Pinewood, Hardwood — B YELLOW

CODE	A x B x C	€/100	HOLE NUM	HOLES Ø	THICKNESS	
SCCI303030	30 x 30 x 30	**98,353**	4	4,6	2	100
SCCI404040	40 x 40 x 40	**124,487**	4	4,6	2	50
SCCI606060	60 x 60 x 60	**248,817**	8	4,5	2	50

SC-EM

Yellow zinc-plated to be embedded

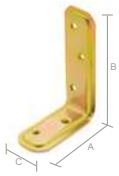

WOOD — Thin wood, Pinewood, Hardwood — B YELLOW

CODE	A x B x C	€/100	HOLE NUM	HOLES Ø	THICKNESS	
SCEM081240	80 x 120 x 40	**551,130**	5	4,7	1,6	20
SCEM101640	100 x 160 x 37	**615,857**	5	4,5	2	20

Angled brackets for wood connectors

SC

SC-ER

Yellow zinc-plated adjustable to be embedded

WOOD — Thin wood, Pinewood, Hardwood — B YELLOW

CODE	A x B x C	€/100	HOLE NUM	HOLES Ø	THICKNESS	
SCER302525	25 x 25 x 30	**123,163**	1/2	4,5 x 14/4,5	1,2	50
SCER392822	39 x 28 x 22	**105,557**	1/1	4,5 x 16/4,5	1	50

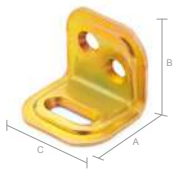

SC-GE Z

Zinc-plated large and adjustable to be embedded

WOOD — Thin wood, Pinewood, Hardwood — Z ZINC

CODE	A x B x C	€/100	HOLE NUM	HOLES Ø	THICKNESS	
SCGEZ704025	25 x 40 x 70	**254,933**	5	4,5	1,5	20



SC-LC

Galvanizada y bicromatada, en L, para cercados de celosía con tornillo soldado

WOOD — Thin wood, Pinewood, Hardwood — B YELLOW

CODE	A x B x C	€/100	HOLE NUM	HOLES Ø	THICKNESS	
SCLCZ354030	34 x 38 x 30	**153,643**	2	4	2	100



SC-MX

Yellow zinc-plated for chairs. Pack 10 pcs

WOOD — Thin wood, Pinewood, Hardwood — B YELLOW

CODE	A x B x C	€/KIT	HOLE NUM	HOLES Ø	THICKNESS	KITS X
SCMX020214	25 x 25 x 14	**4,656**	4	4	1,8	10
SCMX030314	30 x 30 x 14	**5,140**	4	4	1,8	10
SCMX040415	40 x 40 x 15	**5,914**	4	4,2	1,8	10
SCMX050515	50 x 50 x 15	**7,422**	4	4,6	1,8	10
SCMX060618	60 x 60 x 18	**8,414**	4	4,5	1,8	10
SCMX070718	75 x 75 x 18	**8,883**	4	5	2	10

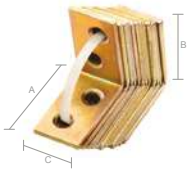

SC-PD

Yellow zinc-plated for posts, unequal-sided

WOOD — Thin wood, Pinewood, Hardwood — B YELLOW

CODE	A x B x C	€/100	HOLE NUM	HOLES Ø	THICKNESS	
SCPD107530	75 x 100 x 30	**287,403**	5	5	2,5	50
SCPD128035	80 x 120 x 35	**493,387**	7	4,5	3,5	25

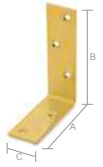

SC-RE Z

Zinc-plated adjustable

WOOD — Thin wood, Pinewood, Hardwood — Z ZINC

CODE	A x B x C	€/100	HOLE NUM	HOLES Ø	THICKNESS	
SCREZ357565	35 x 75 x 65	**614,327**	3/2/2	7/7 x 25/7 x 60	3	10



PT

Supports for wood connectors

PT-BR

Flat tie



WOOD — Thin wood, Pinewood, Hardwood

CODE	SIZE	€/100	HOLE NUM	HOLES Ø	THICKNESS	
PTBR10035	95 x 35	**138,280**	2/12	11/4,5	2,5	50
PTBR13355	135 x 55	**300,450**	2/20	11/4,5	2,5	50

PT-EM

Yellow zinc-plated to be embedded

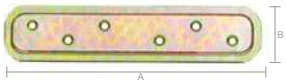

WOOD — Thin wood, Pinewood, Hardwood

CODE	SIZE	€/100	HOLE NUM	HOLES Ø	THICKNESS	
PTEM18040	180 x 40	**367,787**	6	4,7	2	20

PT-ET

T-shaped



WOOD — Thin wood, Pinewood, Hardwood

CODE	SIZE	€/100	HOLE NUM	HOLES Ø	THICKNESS	
PTET169845	160 x 98 x 45	**1.385,207**	4/20	11/4,5	2,5	25

PT-OB

Yellow zinc-plated with beveled holes on both sides

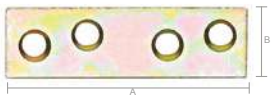

WOOD — Thin wood, Pinewood, Hardwood

CODE	SIZE	€/100	HOLE NUM	HOLES Ø	THICKNESS	
PTOB05015	50 x 15	**61,560**	4	4,7	1,75	100
PTOB06015	60 x 15	**70,360**	4	4,5	1,75	100
PTOB08015	80 x 15	**79,157**	4	4,5	1,75	100
PTOB10015	100 x 15	**87,960**	4	5	1,75	100
PTOB12020	120 x 20	**96,700**	4	5,5	1,75	100

PT-TT

T-shaped

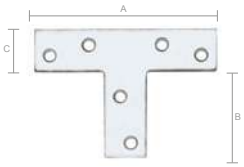

WOOD — Thin wood, Pinewood, Hardwood

CODE	SIZE	€/100	HOLE NUM	HOLES Ø	THICKNESS	
PTTT030716	70 x 35 x 16	**170,920**	6	4,3	1,5	50
PTTT111430	140 x 80 x 30	**377,120**	6	5	2	25

PT-UN

Universal assembly

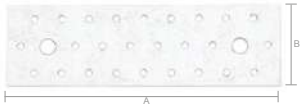

WOOD — Thin wood, Pinewood, Hardwood

CODE	SIZE	€/100	HOLE NUM	HOLES Ø	THICKNESS	
PTUN12038	120 x 40	**149,500**	10	11/4,5	2	50
PTUN16038	160 x 40	**215,147**	12	11/4,5	2	100
PTUN20060	200 x 60	**318,320**	2/26	11/4,5	2	25
PTUN20080	200 x 80	**351,813**	2/38	11/4,5	2	25
PTUN24060	240 x 60	**442,510**	2/32	11/4,5	2	25
PTUN24080	240 x 80	**545,313**	2/46	11/4,5	2	25

Post anchors for wood connectors AP

AP-AR

Yellow zinc-plated, height-adjustable

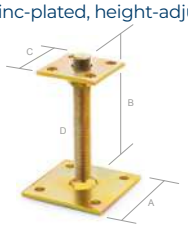

WOOD — Thin wood, Pinewood, Aerated concrete, Hollow concrete, Concrete

CODE	SIZE	€/100	METRIC	HOLE NUM	THICKNESS	
APAR070	70 x 70 x 100 x 100	**4.902,447**	M20	8	5	1
APAR150	150 x 150 x 100 x 100	**6.080,680**	M20	8	5	1

AP-AT

U-shaped to be screwed directly or into already installed rods

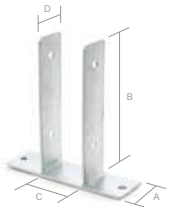

WOOD — Thin wood, Pinewood, Stone, Hardwood, Solid brick, Aerated concrete, Hollow concrete, Concrete

CODE	SIZE	€/100	HOLE NUM	HOLES Ø	THICKNESS	
APAT071	71 x 200 x 60 x 50	**2.579,867**	6	10,5	4	1
APAT091	91 x 200 x 60 x 50	**2.885,730**	6	10,5	4	1
APAT101	101 x 200 x 60 x 50	**2.985,290**	6	10,5	4	1

AP-FL

L-shaped welded with corrugated steel bar

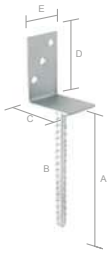

WOOD — Hardwood, Aerated concrete, Hollow concrete, Concrete

CODE	SIZE	€/100	ØD(MM)	HOLE NUM	HOLES Ø	THICKNESS	
APFL801020	80 x 100 x 200 x 60	**2.060,183**	19	3	11	4	1

AP-FU Z

Zinc-plated, U-shaped with adjustable width



WOOD — Stone, Hardwood, Solid brick, Aerated concrete, Hollow concrete, Concrete

CODE	SIZE	€/100	HOLE NUM	HOLES Ø	THICKNESS	
APFUZ100	60-140 x 115 x 100 x 70	**4.843,247**	3/4	11/7	4,5	1

AP-PD

Unequal



WOOD — Hardwood, Aerated concrete, Hollow concrete, Concrete

CODE	SIZE	€/100	HOLE NUM	HOLES Ø	THICKNESS	
APPD100	100 x 100 x 150 x 43	**5.032,520**	8	10,5	5	1

AP

Post anchors for wood connectors

AP-PG

Equal

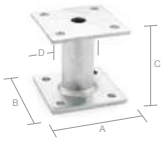

WOOD | Hardwood | Aerated concrete | Hollow concrete | Concrete | ATLANTIS

CODE	SIZE	€/100	HOLE NUM	HOLES Ø	THICKNESS	
APPG070	70 x 90 x 70 x 80 x 90	**4.410,133**	8	8,5	5	1
APPG100	100 x 100 x 100 x 100 x 100	**5.262,567**	8	10,5	5	1

AP-PT

U-shaped welded with corrugated steel bar

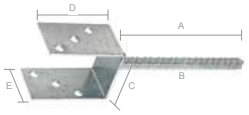

WOOD | Stone | Hardwood | Solid brick | Aerated concrete | Hollow concrete | Concrete | ATLANTIS

CODE	SIZE	€/100	ØD(MM)	HOLE NUM	HOLES Ø	THICKNESS	
APPT071	71 x 100 x 200 x 60	**2.443,667**	19	6	10,5	4	1
APPT091	91 x 100 x 200 x 60	**2.561,160**	19	6	10,5	4	1
APPT101	101 x 100 x 200 x 60	**2.615,907**	19	6	10,5	4	1

AP-UE Z

U-shaped to be embedded with adjustable width

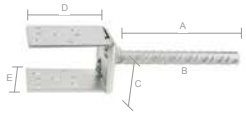

WOOD | Hardwood | Aerated concrete | Hollow concrete | Concrete | ZINC

CODE	SIZE	€/100	HOLE NUM	THICKNESS	
APUEZ200	71-131 x 110 x 200 x 70	**4.973,490**	6	4,5	1

AP-SB

Screw in sleeve



WOOD | Solid brick | Aerated concrete | Hollow concrete | Concrete | ATLANTIS

CODE	SIZE	€/100	HOLE NUM	HOLES Ø	THICKNESS	MIN. ORDER QTY.	
APSB71	71 x 71 x 150	**1.789,281**	2	4 x 11	1,8	2	1
APSB91	91 x 91 x 150	**2.166,148**	2	4 x 11	1,8	2	1

AP-EN

Drive in ground sleeve



WOOD | Solid brick | Aerated concrete | Hollow concrete | Concrete | ATLANTIS

CODE	SIZE	€/100	HOLE NUM	HOLES Ø	THICKNESS	MIN. ORDER QTY.	
APEN71	71 x 71 x 750	**2.447,196**	2	4 x 11	1,8	2	1
APEN91	91 x 91 x 750	**2.752,280**	2	4 x 11	1,8	2	1

VM-PF

Assorted wood connectors ATLANTIS C3-M



WOOD | Thin wood | Pinewood | Aerated concrete | Hollow concrete | Concrete | ATLANTIS

CODE	SIZE	€/100	
VMPF050	4 x 50	**28,630**	200

INDEX A PERFECT FIXING



STANDARDISED NUTS AND BOLTS

DIN-933

Hexagonal head bolt 8.8. Full thread

DIN-933

RAL 3011. Brown red



Available in diferent coatings.
Ask for price and delivery time.

METAL

CODE	SIZE	€/100			
D93304008	M4 x 8	4,780	7	500	22.500
D93304010	M4 x 10	4,983	7	500	22.500
D93304012	M4 x 12	5,093	7	500	12.000
D93304016	M4 x 16	5,433	7	500	12.000
D93304020	M4 x 20	6,487	7	500	12.000
D93304025	M4 x 25	7,267	7	500	6.000
D93304030	M4 x 30	8,307	7	500	6.000
D93304035	M4 x 35	8,727	7	250	6.000
D93304040	M4 x 40	10,790	7	250	3.000
D93304045	M4 x 45	12,523	7	250	3.000
D93304050	M4 x 50	14,247	7	250	3.000
D93304060	M4 x 60	18,643	7	250	3.000
D93305010	M5 x 10	6,110	8	500	12.000
D93305012	M5 x 12	6,453	8	500	12.000
D93305016	M5 x 16	6,800	8	500	6.000
D93305020	M5 x 20	7,583	8	500	6.000
D93305025	M5 x 25	8,007	8	500	6.000
D93305030	M5 x 30	9,633	8	500	6.000
D93305035	M5 x 35	10,403	8	250	3.000
D93305040	M5 x 40	11,220	8	250	3.000
D93305045	M5 x 45	11,897	8	250	3.000
D93305050	M5 x 50	12,870	8	250	3.000
D93305060	M5 x 60	14,497	8	250	1.500
D93305070	M5 x 70	15,980	8	250	3.000
D93306010	M6 x 10	7,470	10	250	6.000
D93306012	M6 x 12	8,207	10	250	6.000
D93306016	M6 x 16	8,807	10	250	6.000
D93306020	M6 x 20	10,117	10	250	3.000
D93306025	M6 x 25	11,117	10	250	3.000
D93306030	M6 x 30	12,807	10	250	3.000
D93306035	M6 x 35	14,447	10	250	3.000
D93306040	M6 x 40	16,097	10	250	3.000
D93306045	M6 x 45	17,737	10	250	1.500
D93306050	M6 x 50	19,350	10	250	1.500
D93306060	M6 x 60	22,633	10	100	1.200
D93306065	M6 x 65	23,917	10	100	600
D93306070	M6 x 70	26,800	10	100	1.200
D93308016	M8 x 16	18,013	13	200	2.400
D93308020	M8 x 20	19,870	13	200	1.600
D93308025	M8 x 25	23,017	13	200	1.600
D93308030	M8 x 30	26,577	13	200	1.200
D93308035	M8 x 35	27,657	13	200	1.200
D93308040	M8 x 40	26,060	13	200	1.200
D93308045	M8 x 45	30,250	13	200	1.200
D93308050	M8 x 50	33,027	13	200	800
D93308060	M8 x 60	39,650	13	200	800
D93308070	M8 x 70	50,103	13	200	800
D93308080	M8 x 80	64,960	13	100	600
D93308090	M8 x 90	81,700	13	100	600
D93308100	M8 x 100	89,823	13	100	400
D93308110	M8 x 110	175,047	13	100	400
D93308120	M8 x 120	176,133	13	100	400
D93310016	M10 x 16	33,857	17	200	1.200
D93310020	M10 x 20	34,250	17	200	1.200
D93310025	M10 x 25	39,800	17	200	1.200
D93310030	M10 x 30	45,093	17	200	800
D93310035	M10 x 35	48,190	17	200	1.200
D93310040	M10 x 40	49,647	17	200	800
D93310045	M10 x 45	56,163	17	200	800
D93310050	M10 x 50	59,853	17	200	800
D93310060	M10 x 60	66,667	17	100	600
D93310070	M10 x 70	75,790	17	100	400
D93310080	M10 x 80	88,263	17	100	400
D93310090	M10 x 90	118,493	17	50	300

CODE	SIZE	€/100			
D93310100	M10 x 100	130,343	17	50	300
D93312020	M12 x 20	53,550	19	100	1.200
D93312025	M12 x 25	55,170	19	100	600
D93312030	M12 x 30	60,780	19	100	600
D93312035	M12 x 35	68,257	19	100	600
D93312040	M12 x 40	72,403	19	100	600
D93312045	M12 x 45	83,270	19	100	600
D93312050	M12 x 50	85,917	19	100	400
D93312060	M12 x 60	93,027	19	100	400
D93312070	M12 x 70	112,413	19	100	400
D93312080	M12 x 80	138,150	19	50	300
D93312090	M12 x 90	170,510	19	50	300
D93312100	M12 x 100	192,693	19	25	300
D93312110	M12 x 110	230,773	19	25	300
D93312120	M12 x 120	249,613	19	25	300
D93314030	M14 x 30	112,053	22	50	400
D93314035	M14 x 35	119,780	22	50	300
D93314040	M14 x 40	128,187	22	50	300
D93314045	M14 x 45	141,867	22	50	300
D93314050	M14 x 50	153,727	22	50	300
D93314060	M14 x 60	173,223	22	50	300
D93314070	M14 x 70	195,563	22	50	300
D93314080	M14 x 80	212,893	22	25	150
D93314090	M14 x 90	208,013	22	25	150
D93314100	M14 x 100	233,913	22	25	150
D93314110	M14 x 110	271,537	22	25	150
D93314120	M14 x 120	309,567	22	25	150
D93316030	M16 x 30	133,800	24	50	300
D93316035	M16 x 35	140,997	24	50	300
D93316040	M16 x 40	145,367	24	50	300
D93316045	M16 x 45	188,457	24	50	300
D93316050	M16 x 50	189,023	24	50	300
D93316060	M16 x 60	191,300	24	50	200
D93316070	M16 x 70	249,007	24	25	150
D93316080	M16 x 80	271,943	24	25	150
D93316090	M16 x 90	289,260	24	25	150
D93316100	M16 x 100	295,920	24	25	150
D93316110	M16 x 110	414,077	24	25	150
D93316120	M16 x 120	435,737	24	25	150
D93318030	M18 x 30	243,617	27	25	150
D93318035	M18 x 35	251,107	27	25	300
D93318040	M18 x 40	265,030	27	25	300
D93318045	M18 x 45	275,577	27	25	300
D93318050	M18 x 50	286,647	27	25	150
D93318060	M18 x 60	316,727	27	25	150
D93318070	M18 x 70	382,517	27	25	150
D93318080	M18 x 80	411,643	27	25	150
D93318090	M18 x 90	536,647	27	25	150
D93318100	M18 x 100	602,433	27	25	150
D93318110	M18 x 110	676,957	27	25	100
D93318120	M18 x 120	751,433	27	25	100
D93320030	M20 x 30	247,947	30	25	150
D93320035	M20 x 35	255,650	30	25	150
D93320040	M20 x 40	314,147	30	25	150
D93320045	M20 x 45	285,433	30	25	150
D93320050	M20 x 50	293,607	30	25	150
D93320060	M20 x 60	361,123	30	25	150
D93320070	M20 x 70	399,650	30	25	100
D93320080	M20 x 80	438,543	30	10	120
D93320090	M20 x 90	536,647	30	10	60
D93320100	M20 x 100	604,873	30	10	60
D93320110	M20 x 110	833,860	30	10	60
D93320120	M20 x 120	870,263	30	10	60

BLISTER and WINDOW BOX
Next page

Hexagonal head bolt 8.8. Full thread DIN-933

Blister

CODE	SIZE	€/BAG	PCS.	BAGS
BZ3Z04008	M4 x 8	2,029	6	20
BZ3Z04010	M4 x 10	2,029	6	20
BZ3Z04012	M4 x 12	2,029	6	20
BZ3Z04016	M4 x 16	2,029	6	20
BZ3Z04020	M4 x 20	2,029	6	20
BZ3Z04025	M4 x 25	2,029	6	20
BZ3Z04030	M4 x 30	2,029	6	20
BZ3Z04035	M4 x 35	2,029	6	20
BZ3Z04040	M4 x 40	2,029	6	20
BZ3Z04045	M4 x 45	2,029	6	20
BZ3Z04050	M4 x 50	2,029	6	20
BZ3Z04060	M4 x 60	2,029	6	20
BZ3Z05010	M5 x 10	2,029	6	20
BZ3Z05012	M5 x 12	2,029	6	20
BZ3Z05015	M5 x 15	2,029	6	20
BZ3Z05016	M5 x 16	2,029	6	20
BZ3Z05020	M5 x 20	2,029	6	20
BZ3Z05025	M5 x 25	2,029	6	20
BZ3Z05030	M5 x 30	2,029	6	20
BZ3Z05035	M5 x 35	2,029	6	20
BZ3Z05040	M5 x 40	2,029	6	20
BZ3Z05045	M5 x 45	2,029	6	20
BZ3Z05050	M5 x 50	2,029	6	20
BZ3Z05060	M5 x 60	2,029	6	20
BZ3Z06016	M6 x 16	2,029	6	20
BZ3Z06020	M6 x 20	2,029	6	20
BZ3Z06025	M6 x 25	2,029	6	20
BZ3Z06030	M6 x 30	2,029	6	20
BZ3Z06040	M6 x 40	2,029	6	20
BZ3Z06050	M6 x 50	2,029	6	20
BZ3Z06060	M6 x 60	2,029	4	20
BZ3Z06070	M6 x 70	2,029	4	20
BZ3Z08016	M8 x 16	2,029	4	20
BZ3Z08020	M8 x 20	2,029	4	20
BZ3Z08025	M8 x 25	2,029	4	20
BZ3Z08030	M8 x 30	2,029	4	20
BZ3Z08040	M8 x 40	2,029	4	20
BZ3Z08050	M8 x 50	2,029	4	20
BZ3Z08060	M8 x 60	2,029	4	20
BZ3Z08070	M8 x 70	2,029	4	20
BZ3Z08080	M8 x 80	2,029	4	20
BZ3Z10030	M10 x 30	2,029	2	20
BZ3Z10040	M10 x 40	2,029	2	20
BZ3Z10050	M10 x 50	2,029	2	20

Window Box

CODE	SIZE	€/BOX	PCS.	BOXES
VD93304008	M4 x 8	5,805	100	8
VD93304010	M4 x 10	6,050	100	8
VD93304012	M4 x 12	6,178	100	8
VD93304016	M4 x 16	6,592	100	8
VD93304020	M4 x 20	7,592	100	8
VD93304025	M4 x 25	7,056	80	8
VD93304030	M4 x 30	7,488	80	8
VD93304040	M4 x 40	6,082	50	8
VD93304050	M4 x 50	6,664	40	8
VD93304060	M4 x 60	9,862	40	8
VD93305010	M5 x 10	6,888	100	8
VD93305012	M5 x 12	5,818	80	8
VD93305016	M5 x 16	6,368	80	8
VD93305020	M5 x 20	6,214	70	8
VD93305025	M5 x 25	6,251	60	8
VD93305030	M5 x 30	5,009	40	8
VD93305040	M5 x 40	4,800	30	8
VD93305050	M5 x 50	4,076	15	8
VD93305060	M5 x 60	4,294	15	8
VD93305070	M5 x 70	3,949	10	8
VD93306016	M6 x 16	5,227	50	8
VD93306020	M6 x 20	5,924	50	8
VD93306025	M6 x 25	5,860	45	8
VD93306030	M6 x 30	5,992	40	8
VD93306040	M6 x 40	5,651	30	8
VD93306050	M6 x 50	4,076	15	8
VD93306060	M6 x 60	4,586	15	8
VD93306070	M6 x 70	5,227	15	8
VD93308016	M8 x 16	8,567	40	8
VD93308020	M8 x 20	8,348	35	8
VD93308025	M8 x 25	8,079	30	8
VD93308030	M8 x 30	7,780	25	8
VD93308040	M8 x 40	6,191	20	8
VD93308050	M8 x 50	5,886	15	8
VD93308060	M8 x 60	7,065	15	8
VD93308070	M8 x 70	8,793	15	8
VD93308080	M8 x 80	7,601	10	8
VD93308100	M8 x 100	10,122	10	8
VD93310020	M10 x 20	6,159	15	8
VD93310030	M10 x 30	7,916	15	8
VD93310040	M10 x 40	5,809	10	8
VD93310050	M10 x 50	7,006	10	8
VD93310060	M10 x 60	7,802	10	8
VD93310070	M10 x 70	8,866	10	8
VD93310080	M10 x 80	10,327	10	8
VD93312030	M12 x 30	7,106	10	8
VD93312040	M12 x 40	6,946	8	8
VD93312050	M12 x 50	6,033	6	8
VD93312060	M12 x 60	6,701	6	8
VD93312070	M12 x 70	7,893	6	8
VD93312080	M12 x 80	9,698	6	8





Available in diferent coatings.
Ask for price and delivery time.

More range previous page

DIN-933

Hexagonal head bolt 8.8. Full thread

STAINLESS STEEL

DIN-933 A2

A2 Stainless steel



CODE	SIZE	€/100			
D933IM04010	M4 x 10	12,083	7	500	12.000
D933IM04016	M4 x 16	14,473	7	500	12.000
D933IM04020	M4 x 20	16,650	7	500	8.000
D933IM04025	M4 x 25	17,960	7	500	8.000
D933IM04030	M4 x 30	20,573	7	500	6.000
D933IM04035	M4 x 35	25,250	7	250	6.000
D933IM04040	M4 x 40	28,077	7	250	6.000
D933IM05010	M5 x 10	12,627	8	500	8.000
D933IM05016	M5 x 16	14,800	8	500	-
D933IM05020	M5 x 20	16,760	8	500	6.000
D933IM05025	M5 x 25	19,263	8	500	4.000
D933IM05030	M5 x 30	22,310	8	500	4.000
D933IM05035	M5 x 35	24,707	8	250	3.000
D933IM05040	M5 x 40	27,753	8	250	3.000
D933IM05050	M5 x 50	33,960	8	250	3.000
D933IM06010	M6 x 10	21,180	10	250	6.000
D933IM06016	M6 x 16	22,437	10	250	4.000
D933IM06020	M6 x 20	25,993	10	250	4.000
D933IM06025	M6 x 25	27,007	10	250	3.000
D933IM06030	M6 x 30	31,380	10	250	3.000
D933IM06035	M6 x 35	35,483	10	250	2.000
D933IM06040	M6 x 40	39,223	10	250	2.000
D933IM06050	M6 x 50	46,547	10	250	1.500
D933IM08016	M8 x 16	41,407	13	200	1.600
D933IM08020	M8 x 20	44,880	13	200	1.600
D933IM08025	M8 x 25	50,663	13	200	1.600
D933IM08030	M8 x 30	56,327	13	200	1.200
D933IM08035	M8 x 35	61,977	13	200	1.200
D933IM08040	M8 x 40	68,413	13	200	1.200
D933IM08050	M8 x 50	82,320	13	200	800
D933IM08060	M8 x 60	93,953	13	200	800
D933IM08070	M8 x 70	112,587	13	200	800
D933IM08080	M8 x 80	128,683	13	100	600
D933IM08090	M8 x 90	142,570	13	100	600
D933IM08100	M8 x 100	159,967	13	100	600
D933IM10020	M10 x 20	84,357	17	200	800
D933IM10025	M10 x 25	88,470	17	200	800
D933IM10030	M10 x 30	96,950	17	200	800
D933IM10035	M10 x 35	105,697	17	200	800

CODE	SIZE	€/100			
D933IM10040	M10 x 40	111,617	17	200	-
D933IM10050	M10 x 50	132,967	17	200	-
D933IM10060	M10 x 60	152,267	17	100	600
D933IM10070	M10 x 70	171,757	17	100	400
D933IM10080	M10 x 80	202,097	17	100	400
D933IM10090	M10 x 90	227,687	17	50	300
D933IM10100	M10 x 100	256,903	17	50	300
D933IM12020	M12 x 20	138,480	19	100	600
D933IM12030	M12 x 30	144,040	19	100	600
D933IM12040	M12 x 40	162,333	19	100	400
D933IM12050	M12 x 50	187,337	19	100	400
D933IM12060	M12 x 60	213,523	19	100	400
D933IM12070	M12 x 70	239,983	19	100	-
D933IM12080	M12 x 80	299,853	19	50	300
D933IM12090	M12 x 90	328,287	19	50	300
D933IM12100	M12 x 100	356,733	19	25	150
D933IM14030	M14 x 30	271,427	22	50	300
D933IM14040	M14 x 40	297,273	22	50	300
D933IM14050	M14 x 50	338,637	22	50	300
D933IM14060	M14 x 60	385,163	22	50	200
D933IM14070	M14 x 70	429,107	22	50	200
D933IM14080	M14 x 80	460,923	22	25	150
D933IM14100	M14 x 100	632,190	22	25	150
D933IM16030	M16 x 30	299,723	24	50	300
D933IM16040	M16 x 40	311,187	24	50	200
D933IM16050	M16 x 50	354,900	24	50	200
D933IM16060	M16 x 60	403,760	24	50	200
D933IM16070	M16 x 70	450,050	24	25	150
D933IM16080	M16 x 80	498,910	24	25	150
D933IM16090	M16 x 90	588,760	24	25	150
D933IM16100	M16 x 100	637,770	24	25	100
D933IM18030	M18 x 30	599,210	27	25	100
D933IM18040	M18 x 40	633,757	27	25	200
D933IM18050	M18 x 50	692,297	27	25	150
D933IM18060	M18 x 60	773,733	27	25	150
D933IM18070	M18 x 70	860,250	27	25	100
D933IM18080	M18 x 80	941,717	27	25	100
D933IM18090	M18 x 90	1.023,167	27	25	100
D933IM18100	M18 x 100	1.104,613	27	25	100

Blister

CODE	SIZE	€/BAG	PCS.	BAGS
BZ3I04010	M4 x 10	2,565	6	20
BZ3I04016	M4 x 16	2,565	6	20
BZ3I04020	M4 x 20	2,565	6	20
BZ3I04030	M4 x 30	2,565	6	20
BZ3I04040	M4 x 40	2,565	6	20
BZ3I05010	M5 x 10	2,565	6	20
BZ3I05016	M5 x 16	2,565	6	20
BZ3I05020	M5 x 20	2,565	6	20
BZ3I05025	M5 x 25	2,277	6	20
BZ3I05030	M5 x 30	2,565	6	20
BZ3I05040	M5 x 40	2,565	6	20
BZ3I05050	M5 x 50	2,565	6	20
BZ3I06016	M6 x 16	2,565	6	20
BZ3I06020	M6 x 20	2,565	6	20
BZ3I06025	M6 x 25	2,565	6	20
BZ3I06030	M6 x 30	2,565	6	20
BZ3I06040	M6 x 40	2,565	6	20
BZ3I06050	M6 x 50	2,565	6	20
BZ3I08016	M8 x 16	2,565	4	20
BZ3I08020	M8 x 20	2,565	4	20
BZ3I08025	M8 x 25	2,565	4	20
BZ3I08030	M8 x 30	2,565	4	20
BZ3I08040	M8 x 40	2,565	4	20
BZ3I08050	M8 x 50	2,565	4	20
BZ3I08060	M8 x 60	2,565	4	20
BZ3I10020	M10 x 20	2,565	2	20
BZ3I10030	M10 x 30	2,565	2	20
BZ3I10040	M10 x 40	2,565	2	20

Window Box

CODE	SIZE	€/BOX	PCS.	BOXES
VD933I04010	M4 x 10	5,951	40	8
VD933I04016	M4 x 16	7,130	40	8
VD933I04020	M4 x 20	7,905	40	8
VD933I04030	M4 x 30	7,601	30	8
VD933I04040	M4 x 40	8,328	25	8
VD933I05010	M5 x 10	6,222	40	8
VD933I05016	M5 x 16	7,294	40	8
VD933I05020	M5 x 20	8,258	40	8
VD933I05030	M5 x 30	5,495	20	8
VD933I05040	M5 x 40	6,838	20	8
VD933I05050	M5 x 50	4,390	10	8
VD933I06010	M6 x 10	7,828	30	8
VD933I06016	M6 x 16	7,983	30	8
VD933I06020	M6 x 20	9,251	30	8
VD933I06025	M6 x 25	8,009	25	8
VD933I06030	M6 x 30	9,307	25	8
VD933I06040	M6 x 40	7,249	15	8
VD933I06050	M6 x 50	5,733	10	8
VD933I08016	M8 x 16	10,201	20	8
VD933I08020	M8 x 20	11,054	20	8
VD933I08025	M8 x 25	12,481	20	8
VD933I08030	M8 x 30	10,408	15	8
VD933I08040	M8 x 40	8,428	10	8
VD933I08050	M8 x 50	10,138	10	8
VD933I08060	M8 x 60	11,573	10	8
VD933I10020	M10 x 20	10,390	10	8
VD933I10030	M10 x 30	11,943	10	8
VD933I10040	M10 x 40	13,749	10	8
VD933I10050	M10 x 50	16,378	10	8
VD933I10060	M10 x 60	18,755	10	8

Hexagonal head bolt 8.8. Half thread DIN-931

METAL



Available in different coatings.
Ask for price and delivery time.

CODE	SIZE	€/100			
D931806030	M6 x 30	**12,850**	10	250	3.000
D931806035	M6 x 35	**15,230**	10	250	2.000
D931806040	M6 x 40	**16,340**	10	250	2.000
D931806045	M6 x 45	**18,393**	10	250	2.000
D931806050	M6 x 50	**19,517**	10	250	1.500
D931806060	M6 x 60	**23,730**	10	100	1.200
D931806070	M6 x 70	**30,250**	10	100	1.200
D931808030	M8 x 30	**26,407**	13	200	1.200
D931808035	M8 x 35	**27,947**	13	200	1.200
D931808040	M8 x 40	**29,770**	13	200	1.200
D931808045	M8 x 45	**32,883**	13	200	1.200
D931808050	M8 x 50	**34,900**	13	250	1.000
D931808060	M8 x 60	**41,103**	13	250	-
D931808070	M8 x 70	**50,407**	13	250	-
D931808080	M8 x 80	**66,407**	13	100	600
D931808090	M8 x 90	**82,783**	13	100	600
D931808100	M8 x 100	**89,160**	13	100	600
D931808110	M8 x 110	**95,567**	13	100	400
D931808120	M8 x 120	**105,950**	13	100	400
D931808130	M8 x 130	**116,467**	13	50	400
D931808140	M8 x 140	**120,413**	13	50	400
D931808150	M8 x 150	**128,003**	13	50	400
D931810035	M10 x 35	**50,297**	17	200	800
D931810040	M10 x 40	**51,777**	17	200	-
D931810045	M10 x 45	**58,333**	17	200	-
D931810050	M10 x 50	**68,110**	17	200	-
D931810060	M10 x 60	**69,313**	17	100	600
D931810070	M10 x 70	**77,317**	17	100	400
D931810080	M10 x 80	**91,140**	17	100	400
D931810090	M10 x 90	**106,607**	17	50	300
D931810100	M10 x 100	**118,410**	17	50	300
D931810110	M10 x 110	**133,493**	17	50	300
D931810120	M10 x 120	**144,020**	17	50	300
D931810130	M10 x 130	**155,867**	17	50	200
D931810140	M10 x 140	**159,670**	17	50	200
D931810150	M10 x 150	**173,330**	17	25	200
D931812040	M12 x 40	**73,823**	19	100	400
D931812045	M12 x 45	**84,403**	19	100	400
D931812050	M12 x 50	**92,717**	19	100	400
D931812060	M12 x 60	**96,020**	19	100	400
D931812070	M12 x 70	**112,723**	19	100	400
D931812080	M12 x 80	**136,653**	19	50	300
D931812090	M12 x 90	**141,443**	19	50	200
D931812100	M12 x 100	**154,697**	19	25	200
D931812110	M12 x 110	**180,797**	19	25	200
D931812120	M12 x 120	**194,447**	19	25	200

CODE	SIZE	€/100			
D931812130	M12 x 130	**214,683**	19	25	200
D931812140	M12 x 140	**225,353**	19	25	-
D931812150	M12 x 150	**236,410**	19	10	120
D931814050	M14 x 50	**151,220**	22	50	300
D931814060	M14 x 60	**171,747**	22	50	200
D931814070	M14 x 70	**192,650**	22	50	200
D931814080	M14 x 80	**210,930**	22	25	150
D931814090	M14 x 90	**252,640**	22	25	150
D931814100	M14 x 100	**291,617**	22	25	150
D931814110	M14 x 110	**320,007**	22	25	150
D931814120	M14 x 120	**326,277**	22	25	150
D931814130	M14 x 130	**333,477**	22	25	100
D931814140	M14 x 140	**341,227**	22	25	100
D931814150	M14 x 150	**360,663**	22	10	120
D931816050	M16 x 50	**188,523**	24	50	200
D931816060	M16 x 60	**192,477**	24	50	200
D931816070	M16 x 70	**201,150**	24	25	150
D931816080	M16 x 80	**224,340**	24	25	150
D931816090	M16 x 90	**247,460**	24	25	150
D931816100	M16 x 100	**294,310**	24	25	100
D931816110	M16 x 110	**324,250**	24	25	100
D931816120	M16 x 120	**346,637**	24	25	100
D931816130	M16 x 130	**365,690**	24	25	100
D931816140	M16 x 140	**376,050**	24	25	100
D931816150	M16 x 150	**416,637**	24	10	80
D931818060	M18 x 60	**344,900**	27	25	150
D931818070	M18 x 70	**359,260**	27	25	100
D931818080	M18 x 80	**405,810**	27	25	100
D931818090	M18 x 90	**416,073**	27	25	100
D931818100	M18 x 100	**453,757**	27	25	100
D931818110	M18 x 110	**481,223**	27	10	80
D931818120	M18 x 120	**543,390**	27	10	80
D931818130	M18 x 130	**717,950**	27	10	80
D931818140	M18 x 140	**766,370**	27	10	80
D931818150	M18 x 150	**815,010**	27	10	-
D931820060	M20 x 60	**356,210**	30	25	100
D931820070	M20 x 70	**394,533**	30	25	100
D931820080	M20 x 80	**434,847**	30	25	100
D931820090	M20 x 90	**527,727**	30	25	150
D931820100	M20 x 100	**606,970**	30	25	-
D931820110	M20 x 110	**681,037**	30	10	-
D931820120	M20 x 120	**735,533**	30	10	-
D931820130	M20 x 130	**786,990**	30	10	-
D931820140	M20 x 140	**838,160**	30	10	60
D931820150	M20 x 150	**892,107**	30	5	30

Blister

CODE	SIZE	€/BAG	PCS.	BAGS
BZ93106030	M6 x 30	**2,029**	6	20
BZ93106040	M6 x 40	**2,029**	6	20
BZ93106050	M6 x 50	**2,029**	6	20
BZ93106060	M6 x 60	**2,029**	4	20
BZ93106070	M6 x 70	**2,029**	4	20
BZ93108030	M8 x 30	**2,029**	4	20
BZ93108040	M8 x 40	**2,029**	4	20
BZ93108050	M8 x 50	**2,029**	4	20
BZ93108060	M8 x 60	**2,029**	4	20
BZ93108070	M8 x 70	**2,029**	4	20
BZ93108080	M8 x 80	**2,029**	4	20

Window Box

CODE	SIZE	€/BOX	PCS.	BOXES
VD93106030	M6 x 30	**6,809**	40	8
VD93106040	M6 x 40	**6,493**	30	8
VD93106050	M6 x 50	**4,303**	15	8
VD93106060	M6 x 60	**4,813**	15	8
VD93106070	M6 x 70	**5,728**	15	8
VD93108030	M8 x 30	**8,166**	25	8
VD93108040	M8 x 40	**7,098**	20	8
VD93108050	M8 x 50	**6,241**	15	8
VD93108060	M8 x 60	**7,350**	15	8
VD93108070	M8 x 70	**9,013**	15	8
VD93108080	M8 x 80	**7,918**	10	8
VD93110040	M10 x 40	**6,552**	10	8
VD93110050	M10 x 50	**8,121**	10	8
VD93110060	M10 x 60	**8,265**	10	8
VD93110070	M10 x 70	**9,215**	10	8
VD93110080	M10 x 80	**10,864**	10	8
VD93112050	M10 x 50	**6,633**	6	8
VD93112060	M10 x 60	**7,165**	6	8
VD93112070	M10 x 70	**8,062**	6	8
VD93112080	M10 x 80	**9,774**	6	8

DIN-6921

Hexagonal flanged bolt with serration 8.8

DIN-6921

METAL



Available in diferent coatings.
Ask for price and delivery time.

CODE	SIZE	€/100			
D692105010	M5 x 10	**9,203**	8	500	6.000
D692105012	M5 x 12	**10,020**	8	500	4.000
D692105016	M5 x 16	**11,227**	8	500	4.000
D692105020	M5 x 20	**11,520**	8	500	3.000
D692105025	M5 x 25	**13,307**	8	500	3.000
D692105030	M5 x 30	**15,537**	8	500	3.000
D692106010	M6 x 10	**13,600**	10	250	-
D692106012	M6 x 12	**14,013**	10	250	3.000
D692106016	M6 x 16	**15,250**	10	250	3.000
D692106020	M6 x 20	**16,810**	10	250	3.000
D692106025	M6 x 25	**18,797**	10	250	2.000
D692106030	M6 x 30	**21,810**	10	250	2.000
D692106035	M6 x 35	**22,270**	10	250	1.500
D692108012	M8 x 12	**27,003**	13	200	1.600
D692108016	M8 x 16	**28,073**	13	200	1.600
D692108020	M8 x 20	**28,677**	13	200	-
D692108025	M8 x 25	**33,407**	13	200	-
D692108030	M8 x 30	**37,123**	13	200	1.200
D692108035	M8 x 35	**41,310**	13	200	1.200
D692108040	M8 x 40	**42,960**	13	200	800
D692108050	M8 x 50	**46,867**	13	200	800
D692108060	M8 x 60	**49,280**	13	200	600
D692110020	M10 x 20	**51,527**	15	200	800
D692110025	M10 x 25	**55,137**	15	200	800
D692110030	M10 x 30	**60,010**	15	200	800
D692110035	M10 x 35	**63,957**	15	200	-
D692110040	M10 x 40	**70,987**	15	200	-
D692110050	M10 x 50	**79,160**	15	200	-
D692112025	M12 x 25	**83,247**	16	100	-
D692112030	M12 x 30	**89,513**	16	100	400
D692112035	M12 x 35	**97,640**	16	100	400
D692112040	M12 x 40	**102,780**	16	100	400
D692112045	M12 x 45	**115,840**	16	100	400
D692112050	M12 x 50	**119,407**	16	100	-
D692112060	M12 x 60	**136,017**	16	100	-

NEW DIN-6921 A2

METAL

Screw DIN-6921. Hexagonal flanged bolt with serration. Stainless steel A2



CODE	SIZE	€/100	INSTALLATION KEY		
6921I08020	M8 x 20	**46,040**	13	200	2.400
6921I08050	M8 x 50	**87,807**	13	100	600
6921I08070	M8 x 70	**112,967**	13	100	600

Hexagon socket head screw 8.8 DIN-912

METAL



Available in diferent coatings.
Ask for price and delivery time.

CODE	SIZE	€/100			
D91204008	M4 x 8	6,777	3	500	22.500
D91204010	M4 x 10	6,907	3	500	12.000
D91204012	M4 x 12	8,780	3	500	12.000
D91204016	M4 x 16	9,083	3	500	12.000
D91204020	M4 x 20	9,310	3	500	6.000
D91204025	M4 x 25	10,690	3	500	6.000
D91204030	M4 x 30	12,293	3	500	6.000
D91204035	M4 x 35	13,527	3	200	4.800
D91204040	M4 x 40	15,007	3	200	2.400
D91204045	M4 x 45	16,170	3	200	2.400
D91204050	M4 x 50	17,230	3	200	2.400
D91205008	M5 x 8	8,190	4	500	12.000
D91205010	M5 x 10	8,357	4	500	12.000
D91205012	M5 x 12	8,390	4	500	6.000
D91205016	M5 x 16	8,553	4	500	6.000
D91205020	M5 x 20	8,947	4	500	6.000
D91205025	M5 x 25	11,320	4	500	6.000
D91205030	M5 x 30	12,917	4	500	6.000
D91205035	M5 x 35	13,933	4	200	4.800
D91205040	M5 x 40	15,470	4	200	2.400
D91205045	M5 x 45	16,407	4	200	2.400
D91205050	M5 x 50	17,383	4	200	2.400
D91206010	M6 x 10	11,660	5	200	4.800
D91206012	M6 x 12	11,970	5	200	4.800
D91206016	M6 x 16	12,370	5	200	4.800
D91206020	M6 x 20	13,063	5	200	2.400
D91206025	M6 x 25	17,923	5	200	2.400
D91206030	M6 x 30	18,823	5	200	2.400
D91206035	M6 x 35	19,013	5	200	2.400
D91206040	M6 x 40	19,823	5	200	2.400
D91206045	M6 x 45	20,610	5	200	2.400
D91206050	M6 x 50	21,880	5	200	2.400
D91206060	M6 x 60	23,787	5	200	1.200
D91208010	M8 x 10	20,550	6	100	2.400
D91208012	M8 x 12	21,357	6	100	2.400
D91208016	M8 x 16	21,790	6	100	2.400
D91208020	M8 x 20	23,013	6	100	2.400

CODE	SIZE	€/100			
D91208025	M8 x 25	25,130	6	100	1.200
D91208030	M8 x 30	30,147	6	100	1.200
D91208035	M8 x 35	39,313	6	100	1.200
D91208040	M8 x 40	47,593	6	100	1.200
D91208045	M8 x 45	48,327	6	100	1.200
D91208050	M8 x 50	49,767	6	100	1.200
D91208060	M8 x 60	52,007	6	100	1.200
D91208070	M8 x 70	54,097	6	100	600
D91208080	M8 x 80	59,503	6	100	600
D91210016	M10 x 16	47,740	8	100	1.200
D91210020	M10 x 20	58,387	8	100	1.200
D91210025	M10 x 25	62,057	8	100	1.200
D91210030	M10 x 30	64,993	8	100	1.200
D91210035	M10 x 35	73,517	8	100	600
D91210040	M10 x 40	79,993	8	100	600
D91210045	M10 x 45	88,117	8	100	600
D91210050	M10 x 50	90,567	8	100	600
D91210060	M10 x 60	103,210	8	100	600
D91210070	M10 x 70	112,117	8	100	600
D91210080	M10 x 80	117,707	8	50	600
D91210090	M10 x 90	119,767	8	50	300
D91210100	M10 x 100	127,463	8	50	300
D91212020	M12 x 20	82,867	10	100	600
D91212025	M12 x 25	84,507	10	100	600
D91212030	M12 x 30	88,433	10	100	600
D91212035	M12 x 35	93,673	10	100	600
D91212040	M12 x 40	97,890	10	100	600
D91212045	M12 x 45	103,797	10	100	600
D91212050	M12 x 50	110,833	10	50	600
D91212060	M12 x 60	125,857	10	50	300
D91212070	M12 x 70	150,010	10	50	300
D91212080	M12 x 80	165,183	10	50	300
D91212090	M12 x 90	181,703	10	50	300
D91212100	M12 x 100	203,503	10	50	300
D91212110	M12 x 110	227,923	10	50	300
D91212120	M12 x 120	247,297	10	50	300

Window Box

CODE	SIZE	€/BOX	PCS.	BOXES
VD91204010	M4 x 10	12,797	150	8
VD91204012	M4 x 12	13,996	125	8
VD91204020	M4 x 20	11,632	100	8
VD91204030	M4 x 30	6,436	40	8
VD91204040	M4 x 40	4,561	20	8
VD91204050	M4 x 50	6,789	20	8
VD91205010	M5 x 10	11,079	100	8
VD91205012	M5 x 12	11,194	100	8
VD91205016	M5 x 16	9,475	90	8
VD91205020	M5 x 20	8,039	70	8
VD91205025	M5 x 25	8,487	60	8
VD91205030	M5 x 30	7,217	40	8
VD91205040	M5 x 40	4,753	20	8
VD91205050	M5 x 50	5,121	20	8
VD91206010	M6 x 10	7,540	50	8
VD91206012	M6 x 12	7,328	50	8
VD91206016	M6 x 16	7,192	50	8
VD91206020	M6 x 20	8,155	50	8
VD91206025	M6 x 25	12,333	50	8
VD91206030	M6 x 30	8,749	35	8
VD91206040	M6 x 40	8,306	30	8
VD91206050	M6 x 50	4,980	15	8
VD91206060	M6 x 60	5,393	15	8
VD91208010	M8 x 10	8,145	30	8
VD91208016	M8 x 16	8,245	30	8
VD91208020	M8 x 20	8,376	30	8
VD91208030	M8 x 30	7,535	20	8
VD91208040	M8 x 40	11,940	20	8
VD91208050	M8 x 50	6,492	10	8
VD91208060	M8 x 60	6,799	10	8

DIN-603/934

Round head screw with square neck and hexagonal nut



Available in diferent coatings.
Ask for price and delivery time.

METAL

CODE	SIZE	€/100		
D603905016	M5 x 16	**10,327**	500	6.000
D603905020	M5 x 20	**10,643**	500	3.000
D603905025	M5 x 25	**11,973**	500	3.000
D603905030	M5 x 30	**12,147**	500	3.000
D603905035	M5 x 35	**15,757**	200	2.400
D603905040	M5 x 40	**16,050**	200	2.400
D603905045	M5 x 45	**18,583**	200	2.400
D603905050	M5 x 50	**20,587**	200	2.400
D603905060	M5 x 60	**23,950**	100	1.200
D603905070	M5 x 70	**26,817**	100	1.200
D603905080	M5 x 80	**32,147**	100	1.200
D603906016	M6 x 16	**15,130**	200	2.400
D603906020	M6 x 20	**15,377**	200	2.400
D603906025	M6 x 25	**16,393**	200	2.400
D603906030	M6 x 30	**17,210**	200	1.200
D603906035	M6 x 35	**19,130**	200	2.400
D603906040	M6 x 40	**19,383**	200	1.200
D603906045	M6 x 45	**22,663**	200	1.200
D603906050	M6 x 50	**23,983**	200	1.200
D603906060	M6 x 60	**27,627**	100	1.200
D603906070	M6 x 70	**33,283**	100	1.200
D603906080	M6 x 80	**33,677**	100	600
D603906090	M6 x 90	**52,547**	100	600
D603906100	M6 x 100	**56,397**	100	600
D603906110	M6 x 110	**64,853**	100	600
D603906120	M6 x 120	**70,883**	100	600
D603906130	M6 x 130	**77,970**	100	600
D603906140	M6 x 140	**88,083**	100	600
D603906150	M6 x 150	**96,373**	100	600
D603908016	M8 x 16	**28,210**	200	1.200
D603908020	M8 x 20	**29,763**	200	1.200
D603908025	M8 x 25	**29,930**	200	1.200
D603908030	M8 x 30	**31,787**	200	1.200
D603908035	M8 x 35	**34,187**	200	1.200
D603908040	M8 x 40	**35,547**	200	1.200
D603908045	M8 x 45	**40,583**	200	1.200
D603908050	M8 x 50	**44,613**	100	1.200
D603908060	M8 x 60	**50,020**	100	600
D603908070	M8 x 70	**53,407**	100	600
D603908080	M8 x 80	**61,720**	100	400
D603908090	M8 x 90	**75,947**	100	600
D603908100	M8 x 100	**77,600**	100	600
D603908110	M8 x 110	**79,093**	50	300

CODE	SIZE	€/100		
D603908120	M8 x 120	**79,560**	50	300
D603908130	M8 x 130	**88,240**	50	300
D603908140	M8 x 140	**100,793**	50	300
D603908150	M8 x 150	**109,137**	50	300
D603910020	M10 x 20	**51,717**	100	600
D603910025	M10 x 25	**52,507**	100	600
D603910030	M10 x 30	**68,570**	100	600
D603910035	M10 x 35	**71,380**	100	600
D603910040	M10 x 40	**72,550**	100	600
D603910045	M10 x 45	**77,473**	100	600
D603910050	M10 x 50	**78,650**	100	600
D603910060	M10 x 60	**93,837**	50	300
D603910070	M10 x 70	**101,807**	50	300
D603910080	M10 x 80	**115,350**	50	300
D603910090	M10 x 90	**125,460**	50	300
D603910100	M10 x 100	**131,643**	50	300
D603910110	M10 x 110	**148,633**	25	300
D603910120	M10 x 120	**157,720**	25	300
D603910130	M10 x 130	**164,027**	25	150
D603910140	M10 x 140	**183,620**	25	150
D603910150	M10 x 150	**199,920**	25	150
D603910160	M10 x 160	**209,110**	25	100
D603910180	M10 x 180	**243,233**	25	100
D603910200	M10 x 200	**257,007**	25	75
D603912030	M12 x 30	**111,230**	50	300
D603912035	M12 x 35	**117,173**	50	300
D603912040	M12 x 40	**130,353**	50	300
D603912045	M12 x 45	**140,637**	50	300
D603912050	M12 x 50	**147,967**	50	300
D603912060	M12 x 60	**161,217**	25	300
D603912070	M12 x 70	**219,233**	25	300
D603912080	M12 x 80	**225,827**	25	150
D603912100	M12 x 100	**235,953**	25	150
D603912120	M12 x 120	**243,187**	25	150
D603912140	M12 x 140	**260,383**	25	150
D603912160	M12 x 160	**297,670**	25	100
D603912180	M12 x 180	**333,483**	25	100
D603912200	M12 x 200	**365,980**	10	40
D603912220	M12 x 220	**446,380**	10	30
D603912240	M12 x 240	**498,263**	10	30
D603912260	M12 x 260	**555,483**	10	20
D603912280	M12 x 280	**607,077**	10	20
D603912300	M12 x 300	**673,990**	10	20

Blister

CODE	SIZE	€/BAG	PCS.	BAGS
BZ603905020	M5 x 20	**2,565**	10	15
BZ603905030	M5 x 30	**2,565**	10	15
BZ603905040	M5 x 40	**2,565**	4	15
BZ603905050	M6 x 16	**2,565**	4	15
BZ603906016	M6 x 80	**2,565**	4	15
BZ603906020	M6 x 20	**2,565**	4	15
BZ603906030	M6 x 30	**2,565**	4	15
BZ603906040	M6 x 40	**2,565**	4	15
BZ603906050	M6 x 50	**2,565**	4	15
BZ603906060	M6 x 60	**2,565**	2	15
BZ603906070	M6 x 70	**2,565**	2	15
BZ603906080	M8 x 20	**2,565**	2	15
BZ603908025	M8 x 25	**2,565**	4	15
BZ603908030	M8 x 30	**2,565**	4	15
BZ603908040	M8 x 40	**2,565**	4	15
BZ603908050	M8 x 50	**2,565**	2	15
BZ603908060	M8 x 60	**2,565**	2	15
BZ603908070	M8 x 70	**2,565**	2	15
BZ603908080	M8 x 80	**2,565**	2	12
BZ603908090	M8 x 90	**2,565**	2	12
BZ603910025	M10 x 25	**2,565**	2	10
BZ603910030	M10 x 30	**2,565**	2	10
BZ603910040	M10 x 40	**2,565**	2	10
BZ603910050	M12 x 70	**2,565**	2	10

Window Box

CODE	SIZE	€/BOX	PCS.	BOXES
VD603905020	M5 x 20	**6,407**	50	8
VD603905030	M5 x 30	**6,430**	40	8
VD603905040	M5 x 40	**7,601**	40	8
VD603905050	M5 x 50	**8,853**	35	8
VD603906016	M6 x 16	**5,431**	30	8
VD603906020	M6 x 20	**5,497**	30	8
VD603906030	M6 x 30	**6,219**	30	8
VD603906040	M6 x 40	**5,844**	25	8
VD603906050	M6 x 50	**7,362**	25	8
VD603906060	M6 x 60	**8,487**	25	8
VD603906070	M6 x 70	**10,634**	25	8
VD603906080	M6 x 80	**8,272**	20	8
VD603908025	M8 x 25	**6,069**	15	8
VD603908030	M8 x 30	**6,331**	15	8
VD603908040	M8 x 40	**6,552**	15	8
VD603908050	M8 x 50	**8,220**	15	8
VD603908060	M8 x 60	**7,381**	12	8
VD603908070	M8 x 70	**6,561**	10	8
VD603908080	M8 x 80	**7,583**	10	8
VD603908090	M8 x 90	**9,420**	10	8
VD603908100	M8 x 100	**9,457**	10	8
VD603910025	M10 x 25	**9,678**	15	8
VD603910030	M10 x 30	**8,421**	10	8
VD603910040	M10 x 40	**8,741**	10	8
VD603910050	M10 x 50	**8,871**	8	8
VD603910060	M10 x 60	**10,137**	8	8
VD603910070	M10 x 70	**10,479**	8	8
VD603910080	M10 x 80	**11,941**	8	8

Round head screw with square neck and hexagonal nut — DIN-603/934

METAL

CODE	SIZE	€/100		
D603I08016	M8 x 16	**42,047**	200	2.400

DIN-603 A2 NEW

Screw DIN-603. Round head screw with square neck. Stainless steel A2



Plow bolt with countersunk head 8.8. With nut — DIN-608

METAL

CODE	SIZE	€/100		
D60810035	10 x 35	**71,177**	100	600
D60810040	10 x 40	**73,433**	100	600
D60810045	10 x 45	**81,010**	100	600
D60810050	10 x 50	**86,257**	100	400
D60810060	10 x 60	**101,120**	100	400
D60811040	11 x 40	**83,050**	50	300
D60811045	11 x 45	**91,507**	50	300
D60811050	11 x 50	**97,210**	50	300
D60811060	11 x 60	**114,363**	50	300
D60811070	11 x 70	**128,287**	50	300

CODE	SIZE	€/100		
D60811080	11 x 80	**144,837**	50	200
D60811090	11 x 90	**160,590**	50	200
D60812040	12 x 40	**101,787**	50	300
D60812045	12 x 45	**107,070**	50	300
D60812050	12 x 50	**113,027**	50	300
D60812060	12 x 60	**130,393**	50	200
D60812070	12 x 70	**144,797**	50	200
D60812080	12 x 80	**159,660**	50	200
D60812090	12 x 90	**179,107**	50	200
D60812100	12 x 100	**198,513**	50	200



Available in diferent coatings.
Ask for price and delivery time.

Cylindrical head screw. Slotted recess. 4.8 — DIN-84

METAL

Metal sheet

CODE	SIZE	€/100		
T0840304Z	M3 x 4	**2,240**	1.000	45.000
T0840306Z	M3 x 6	**2,263**	1.000	30.000
T0840308Z	M3 x 8	**2,297**	1.000	30.000
T0840310Z	M3 x 10	**2,363**	1.000	24.000
T0840312Z	M3 x 12	**2,867**	1.000	24.000
T0840316Z	M3 x 16	**2,883**	1.000	16.000
T0840320Z	M3 x 20	**3,560**	1.000	12.000
T0840325Z	M3 x 25	**4,657**	1.000	12.000
T0840330Z	M3 x 30	**5,357**	500	6.000
T0840335Z	M3 x 35	**6,160**	500	6.000
T0840340Z	M3 x 40	**7,437**	500	6.000
T0840406Z	M4 x 6	**3,387**	500	15.000
T0840408Z	M4 x 8	**3,460**	500	12.000
T0840410Z	M4 x 10	**3,620**	500	12.000
T0840412Z	M4 x 12	**3,800**	500	12.000
T0840416Z	M4 x 16	**4,207**	500	8.000
T0840420Z	M4 x 20	**4,417**	500	8.000
T0840425Z	M4 x 25	**5,003**	500	6.000
T0840435Z	M4 x 35	**7,677**	250	3.000
T0840445Z	M4 x 45	**10,843**	250	3.000
T0840450Z	M4 x 50	**12,853**	250	3.000
T0840460Z	M4 x 60	**15,343**	250	3.000
T0840470Z	M4 x 70	**18,633**	100	1.200
T0840506Z	M5 x 6	**4,887**	500	8.000

CODE	SIZE	€/100		
T0840508Z	M5 x 8	**4,940**	500	12.000
T0840510Z	M5 x 10	**5,103**	500	8.000
T0840512Z	M5 x 12	**5,957**	250	7.500
T0840516Z	M5 x 16	**6,723**	250	6.000
T0840520Z	M5 x 20	**6,793**	250	6.000
T0840525Z	M5 x 25	**7,603**	250	4.000
T0840530Z	M5 x 30	**9,343**	250	4.000
T0840535Z	M5 x 35	**10,843**	250	3.000
T0840540Z	M5 x 40	**11,073**	250	3.000
T0840545Z	M5 x 45	**13,163**	250	3.000
T0840550Z	M5 x 50	**15,213**	250	3.000
T0840560Z	M5 x 60	**18,013**	250	1.500
T0840608Z	M6 x 8	**7,353**	250	1.500
T0840610Z	M6 x 10	**7,540**	250	4.000
T0840616Z	M6 x 16	**9,357**	250	4.000
T0840620Z	M6 x 20	**9,917**	250	3.000
T0840625Z	M6 x 25	**11,403**	250	3.000
T0840630Z	M6 x 30	**12,633**	250	3.000
T0840635Z	M6 x 35	**14,337**	250	1.500
T0840640Z	M6 x 40	**14,793**	250	1.500
T0840645Z	M6 x 45	**16,483**	250	1.500
T0840650Z	M6 x 50	**18,003**	250	1.500
T0840660Z	M6 x 60	**19,993**	250	1.500



Available in diferent coatings.
Ask for price and delivery time.

DIN-7985

Panhead screw with PH recess. 4.8

METAL



Available in diferent coatings.
Ask for price and delivery time.

CODE	SIZE	€/100			
T9850306Z	M3 x 6	**1,860**	PH1	1.000	30.000
T9850308Z	M3 x 8	**1,883**	PH1	1.000	30.000
T9850310Z	M3 x 10	**1,903**	PH1	1.000	24.000
T9850312Z	M3 x 12	**2,097**	PH1	1.000	24.000
T9850316Z	M3 x 16	**2,250**	PH1	1.000	16.000
T9850320Z	M3 x 20	**2,733**	PH1	1.000	12.000
T9850325Z	M3 x 25	**3,273**	PH1	500	12.000
T9850330Z	M3 x 30	**3,960**	PH1	500	12.000
T9850406Z	M4 x 6	**2,920**	PH2	500	12.000
T9850408Z	M4 x 8	**2,957**	PH2	500	12.000
T9850410Z	M4 x 10	**3,567**	PH2	500	12.000
T9850412Z	M4 x 12	**3,663**	PH2	500	8.000
T9850416Z	M4 x 16	**3,993**	PH2	500	8.000
T9850420Z	M4 x 20	**4,217**	PH2	500	8.000
T9850425Z	M4 x 25	**5,043**	PH2	500	6.000
T9850430Z	M4 x 30	**6,077**	PH2	500	6.000
T9850435Z	M4 x 35	**8,013**	PH2	250	3.000
T9850440Z	M4 x 40	**8,380**	PH2	250	3.000
T9850450Z	M4 x 50	**10,890**	PH2	250	3.000
T9850506Z	M5 x 6	**5,203**	PH2	500	8.000
T9850508Z	M5 x 8	**5,303**	PH2	500	8.000

CODE	SIZE	€/100			
T9850510Z	M5 x 10	**5,530**	PH2	500	8.000
T9850512Z	M5 x 12	**6,107**	PH2	250	6.000
T9850516Z	M5 x 16	**6,567**	PH2	250	4.000
T9850520Z	M5 x 20	**7,067**	PH2	250	4.000
T9850525Z	M5 x 25	**7,997**	PH2	250	4.000
T9850530Z	M5 x 30	**8,820**	PH2	250	2.000
T9850535Z	M5 x 35	**10,560**	PH2	250	3.000
T9850540Z	M5 x 40	**11,773**	PH2	250	3.000
T9850545Z	M5 x 45	**12,097**	PH2	250	2.000
T9850550Z	M5 x 50	**15,483**	PH2	250	2.000
T9850608Z	M6 x 8	**8,173**	PH3	250	6.000
T9850610Z	M6 x 10	**8,297**	PH3	250	4.000
T9850612Z	M6 x 12	**8,977**	PH3	250	4.000
T9850616Z	M6 x 16	**9,193**	PH3	250	4.000
T9850620Z	M6 x 20	**10,837**	PH3	250	3.000
T9850625Z	M6 x 25	**11,990**	PH3	250	3.000
T9850630Z	M6 x 30	**12,933**	PH3	250	3.000
T9850635Z	M6 x 35	**14,593**	PH3	250	3.000
T9850640Z	M6 x 40	**16,257**	PH3	250	1.500
T9850650Z	M6 x 50	**19,900**	PH3	250	1.500
T9850660Z	M6 x 60	**21,460**	PH3	250	1.500

Blister

CODE	SIZE	€/BAG	PCS.	BAGS
BZT9850306Z	M3 x 6	**2,029**	10	20
BZT9850310Z	M3 x 10	**2,029**	10	20
BZT9850316Z	M3 x 16	**2,029**	6	20
BZT9850320Z	M3 x 20	**2,029**	6	20
BZT9850330Z	M3 x 30	**2,029**	6	20
BZT9850416Z	M4 x 16	**2,029**	6	20
BZT9850420Z	M4 x 20	**2,029**	6	20
BZT9850430Z	M4 x 30	**2,029**	6	20
BZT9850510Z	M5 x 10	**2,029**	6	20
BZT9850520Z	M5 x 20	**2,029**	6	20
BZT9850525Z	M5 x 25	**2,029**	6	20
BZT9850530Z	M5 x 30	**2,029**	6	20
BZT9850540Z	M5 x 40	**2,029**	6	20
BZT9850610Z	M6 x 10	**2,029**	6	20
BZT9850616Z	M6 x 16	**2,029**	6	20
BZT9850620Z	M6 x 20	**2,029**	6	20
BZT9850625Z	M6 x 25	**2,029**	6	20
BZT9850630Z	M6 x 30	**2,029**	6	20
BZT9850640Z	M6 x 40	**2,029**	6	15
BZT9850650Z	M6 x 50	**2,029**	4	15
BZT9850660Z	M6 x 60	**2,029**	4	15

Window Box

CODE	SIZE	€/BOX	PCS.	BOXES
VT9850306Z	M3 x 6	**4,147**	150	8
VT9850310Z	M3 x 10	**4,403**	150	8
VT9850316Z	M3 x 16	**3,900**	100	8
VT9850320Z	M3 x 20	**4,151**	100	8
VT9850330Z	M3 x 30	**4,626**	100	8
VT9850406Z	M4 x 6	**4,172**	100	8
VT9850408Z	M4 x 8	**4,252**	100	8
VT9850410Z	M4 x 10	**4,479**	100	8
VT9850416Z	M4 x 16	**4,878**	100	8
VT9850420Z	M4 x 20	**5,155**	100	8
VT9850506Z	M5 x 6	**5,390**	100	8
VT9850510Z	M5 x 10	**5,637**	100	8
VT9850512Z	M5 x 12	**5,382**	70	8
VT9850516Z	M5 x 16	**5,508**	70	8
VT9850520Z	M5 x 20	**5,919**	70	8
VT9850530Z	M5 x 30	**5,470**	50	8
VT9850540Z	M5 x 40	**6,935**	50	8
VT9850550Z	M5 x 50	**9,067**	50	8
VT9850610Z	M6 x 10	**7,061**	70	8
VT9850612Z	M6 x 12	**7,530**	70	8
VT9850616Z	M6 x 16	**7,707**	70	8
VT9850620Z	M6 x 20	**7,753**	50	8
VT9850630Z	M6 x 30	**7,614**	50	8
VT9850640Z	M6 x 40	**9,567**	50	8
VT9850650Z	M6 x 50	**11,787**	50	8
VT9850660Z	M6 x 60	**12,627**	50	8

Slotted countersunk head screw. 4.8 — DIN-963

METAL



Available in diferent coatings.
Ask for price and delivery time.

CODE	SIZE	€/100		
T9630410Z	M4 x 10	3,020	500	22.500
T9630412Z	M4 x 12	3,187	500	22.500
T9630416Z	M4 x 16	3,267	500	12.000
T9630420Z	M4 x 20	3,413	500	12.000
T9630430Z	M4 x 30	4,910	500	6.000
T9630440Z	M4 x 40	6,203	250	3.000
T9630450Z	M4 x 50	9,203	250	3.000
T9630510Z	M5 x 10	3,450	500	12.000
T9630512Z	M5 x 12	4,093	500	12.000
T9630516Z	M5 x 16	4,250	250	7.500
T9630520Z	M5 x 20	4,953	250	6.000
T9630525Z	M5 x 25	6,153	250	6.000
T9630530Z	M5 x 30	6,350	250	4.000

CODE	SIZE	€/100		
T9630540Z	M5 x 40	9,803	250	3.000
T9630550Z	M5 x 50	11,857	250	3.000
T9630560Z	M5 x 60	14,303	250	1.500
T9630610Z	M6 x 10	5,577	250	11.250
T9630612Z	M6 x 12	5,817	250	11.250
T9630616Z	M6 x 16	6,153	250	6.000
T9630620Z	M6 x 20	7,200	250	4.000
T9630625Z	M6 x 25	8,103	250	3.000
T9630630Z	M6 x 30	9,203	250	3.000
T9630640Z	M6 x 40	11,370	250	1.500
T9630650Z	M6 x 50	12,907	250	1.500
T9630660Z	M6 x 60	14,270	250	1.500

Countersunk head screw with PH recess. 4.8 — DIN-965

METAL



Available in diferent coatings.
Ask for price and delivery time.

CODE	SIZE	€/100			
T9650306Z	M3 x 6	2,053	PH1	1.000	45.000
T9650308Z	M3 x 8	2,053	PH1	1.000	45.000
T9650310Z	M3 x 10	2,053	PH1	1.000	30.000
T9650312Z	M3 x 12	2,250	PH1	1.000	24.000
T9650316Z	M3 x 16	2,593	PH1	500	22.500
T9650320Z	M3 x 20	3,050	PH1	500	22.500
T9650325Z	M3 x 25	3,700	PH1	500	12.000
T9650408Z	M4 x 8	3,087	PH2	500	22.500
T9650410Z	M4 x 10	3,190	PH2	500	12.000
T9650412Z	M4 x 12	3,360	PH2	500	22.500
T9650416Z	M4 x 16	3,497	PH2	500	12.000
T9650420Z	M4 x 20	3,960	PH2	500	12.000
T9650425Z	M4 x 25	4,363	PH2	500	6.000
T9650430Z	M4 x 30	5,290	PH2	500	6.000
T9650435Z	M4 x 35	6,247	PH2	500	6.000
T9650440Z	M4 x 40	7,197	PH2	250	3.000
T9650450Z	M4 x 50	8,370	PH2	250	3.000
T9650510Z	M5 x 10	4,827	PH2	250	11.250
T9650512Z	M5 x 12	5,190	PH2	250	11.250

CODE	SIZE	€/100			
T9650516Z	M5 x 16	5,550	PH2	250	6.000
T9650520Z	M5 x 20	6,167	PH2	250	6.000
T9650525Z	M5 x 25	6,937	PH2	250	6.000
T9650530Z	M5 x 30	7,760	PH2	250	4.000
T9650535Z	M5 x 35	8,937	PH2	250	6.000
T9650540Z	M5 x 40	9,823	PH2	250	3.000
T9650550Z	M5 x 50	12,750	PH2	250	3.000
T9650560Z	M5 x 60	16,037	PH2	250	1.500
T9650610Z	M6 x 10	7,213	PH3	250	6.000
T9650612Z	M6 x 12	7,357	PH3	250	6.000
T9650616Z	M6 x 16	7,910	PH3	250	6.000
T9650620Z	M6 x 20	9,053	PH3	250	4.000
T9650625Z	M6 x 25	10,030	PH3	250	3.000
T9650630Z	M6 x 30	11,213	PH3	250	3.000
T9650635Z	M6 x 35	12,490	PH3	250	3.000
T9650640Z	M6 x 40	13,770	PH3	250	1.500
T9650650Z	M6 x 50	16,650	PH3	250	1.500
T9650660Z	M6 x 60	19,737	PH3	100	1.200

Blister

CODE	SIZE	€/BAG	PCS.	BAGS
BZT96504102Z	M4 x 10	2,029	6	20
BZT96504202Z	M4 x 20	2,029	6	20
BZT96504302Z	M4 x 30	2,029	6	20
BZT96505102Z	M5 x 10	2,029	6	20
BZT96505202Z	M5 x 20	2,029	6	20
BZT96505252Z	M5 x 25	2,029	6	20
BZT96505302Z	M5 x 30	2,029	6	20
BZT96506202Z	M6 x 20	2,029	6	20
BZT96506302Z	M6 x 30	2,029	6	20
BZT96506402Z	M6 x 40	2,029	6	20

Window Box

CODE	SIZE	€/BOX	PCS.	BOXES
VT96503062Z	M3 x 6	5,145	200	8
VT96503102Z	M3 x 10	4,997	200	8
VT96504082Z	M4 x 8	3,907	100	8
VT96504102Z	M4 x 10	3,951	100	8
VT96504202Z	M4 x 20	4,824	100	8
VT96504252Z	M4 x 25	5,313	100	8
VT96504302Z	M4 x 30	6,438	100	8
VT96504162Z	M4 x 16	4,259	100	8
VT96505102Z	M5 x 10	4,115	70	8
VT96505162Z	M5 x 16	4,736	70	8
VT96505202Z	M5 x 20	5,257	70	8
VT96505302Z	M5 x 30	4,720	50	8
VT96505402Z	M5 x 40	5,983	50	8
VT96506102Z	M6 x 10	6,267	70	8
VT96506162Z	M6 x 16	6,739	70	8
VT96506202Z	M6 x 20	7,714	70	8
VT96506302Z	M6 x 30	6,823	50	8

DIN-934 Hexagonal nut

DIN-934

Zinc-plated



Available in diferent coatings.
Ask for price and delivery time.

METAL

CODE	SIZE	€/100	INSTALLATION KEY		
D93403	M3	1,597	5,5	500	22.500
D93404	M4	1,650	7	1.000	45.000
D93405	M5	2,143	8	500	12.000
D93406	M6	3,357	10	500	12.000
D93408	M8	6,000	13	250	6.000
D93410	M10	14,320	17	250	3.000
D93412	M12	22,633	19	250	1.500
D93414	M14	30,197	22	100	1.200
D93416	M16	44,917	24	100	600
D93418	M18	64,120	27	100	600
D93420	M20	74,713	30	50	600
D93422	M22	119,833	32	50	300
D93424	M24	168,113	36	25	300
D93427	M27	290,203	41	25	150
D93430	M30	385,367	46	25	150
D93433	M33	549,240	50	10	120
D93436	M36	582,967	55	10	60

Blister

CODE	SIZE	€/BAG	PCS.	BAGS
BZ934ZM03	M3	2,029	40	20
BZ934ZM04	M4	2,029	40	20
BZ934ZM05	M5	2,029	40	20
BZ934ZM06	M6	2,029	20	20
BZ934ZM08	M8	2,029	10	20
BZ934ZM10	M10	2,029	10	15
BZ934ZM12	M12	2,029	6	15

Window Box

CODE	SIZE	€/BOX	PCS.	BOXES
VD93403	M3	3,535	150	8
VD93404	M4	3,535	150	8
VD93405	M5	3,076	100	8
VD93406	M6	4,403	100	8
VD93408	M8	3,930	50	8
VD93410	M10	5,645	30	8
VD93412	M12	5,946	20	8

DIN-934 A2

A2 Stainless steel



STAINLESS STEEL

CODE	SIZE	€/100	INSTALLATION KEY		
D934IM04	M4	4,447	7	500	22.500
D934IM05	M5	5,140	8	500	12.000
D934IM06	M6	8,483	10	500	12.000
D934IM08	M8	17,207	13	250	4.000
D934IM10	M10	38,387	17	250	2.000
D934IM12	M12	56,280	19	250	1.500
D934IM14	M14	80,893	22	100	800
D934IM16	M16	113,520	24	100	600
D934IM18	M18	180,550	27	100	600
D934IM20	M20	237,070	30	50	400
D934IM22	M22	327,683	32	50	300
D934IM24	M24	425,983	36	25	200

Blister

CODE	SIZE	€/BAG	PCS.	BAGS
BZ934IM04	M4	2,565	10	20
BZ934IM05	M5	2,565	8	20
BZ934IM06	M6	2,565	8	20
BZ934IM08	M8	2,565	6	20
BZ934IM10	M10	2,565	5	15

Window Box

CODE	SIZE	€/BOX	PCS.	BOXES
VD934IM04	M4	3,274	50	8
VD934IM05	M5	3,786	50	8
VD934IM06	M6	5,621	50	8
VD934IM08	M8	6,841	30	8
VD934IM10	M10	10,175	20	8

Nylon insert nut DIN-985

METAL

DIN-985

Zinc-plated



Available in different coatings.
Ask for price and delivery time.

CODE	SIZE	€/100	INSTALLATION KEY		
DZ98503	M3	**2,957**	5,5	500	22.500
DZ98504	M4	**3,093**	7	500	12.000
DZ98505	M5	**3,313**	8	500	12.000
DZ98506	M6	**4,617**	10	500	12.000
DZ98508	M8	**8,250**	13	250	6.000
DZ98510	M10	**18,260**	17	250	3.000
DZ98512	M12	**28,747**	19	100	1.200
DZ98514	M14	**45,923**	22	100	1.200
DZ98516	M16	**55,973**	24	50	600
DZ98518	M18	**92,610**	27	50	600
DZ98520	M20	**116,433**	30	25	300
DZ98522	M22	**189,060**	32	25	300
DZ98524	M24	**229,783**	36	25	300
DZ98527	M27	**454,933**	41	15	180
DZ98530	M30	**769,710**	46	15	90

Blister

CODE	SIZE	€/BAG	PCS.	BAGS
BZZ98503	M3	**2,029**	20	20
BZZ98504	M4	**2,029**	20	20
BZZ98505	M5	**2,029**	20	20
BZZ98506	M6	**2,029**	10	20
BZZ98508	M8	**2,029**	5	20
BZZ98510	M10	**2,029**	5	15
BZZ98512	M12	**2,029**	3	15

Window Box

CODE	SIZE	€/BOX	PCS.	BOXES
VDZ98503	M3	**4,428**	100	8
VDZ98504	M4	**4,428**	100	8
VDZ98505	M5	**4,623**	100	8
VDZ98506	M6	**5,332**	80	8
VDZ98508	M8	**5,291**	50	8
VDZ98510	M10	**5,905**	25	8
VDZ98512	M12	**5,914**	15	8

STAINLESS STEEL

DIN-985 A2

A2 Stainless steel



CODE	SIZE	€/100	INSTALLATION KEY		
D985IM04	M4	**8,233**	7	500	8.000
D985IM05	M5	**8,867**	8	500	8.000
D985IM06	M6	**12,527**	10	500	8.000
D985IM08	M8	**24,697**	13	250	4.000
D985IM10	M10	**52,593**	17	250	2.000
D985IM12	M12	**81,753**	19	100	1.200
D985IM14	M14	**146,147**	22	100	800
D985IM16	M16	**177,133**	24	50	600
D985IM18	M18	**405,373**	27	50	400
D985IM20	M20	**519,897**	30	25	300
D985IM22	M22	**1.176,747**	32	25	300
D985IM24	M24	**1.586,600**	36	25	150

Blister

CODE	SIZE	€/BAG	PCS.	BAGS
BZ985IM04	M4	**2,565**	10	20
BZ985IM05	M5	**2,565**	8	20
BZ985IM06	M6	**2,565**	8	20
BZ985IM08	M8	**2,565**	6	20
BZ985IM10	M10	**2,565**	5	15

Window Box

CODE	SIZE	€/BOX	PCS.	BOXES
VD985IM04	M4	**5,454**	50	8
VD985IM05	M5	**5,877**	50	8
VD985IM06	M6	**8,302**	50	8
VD985IM08	M8	**9,819**	30	8
VD985IM10	M10	**13,942**	20	8

DIN-6923 Hexagonal flange nut with serration

DIN-6923

METAL



Available in diferent coatings.
Ask for price and delivery time.

CODE	SIZE	€/100	INSTALLATION KEY		
D692304	M4	**3,153**	7	500	15.000
D692305	M5	**3,890**	8	500	12.000
D692306	M6	**5,887**	10	500	8.000
D692308	M8	**11,463**	13	250	3.000
D692310	M10	**18,713**	15	250	2.000
D692312	M12	**29,680**	18	250	1.000
D692314	M14	**51,900**	21	100	600
D692316	M16	**65,227**	24	100	400

NEW DIN-6923 A2

DIN-6923 Hexagonal flange nut with serration. Stainless steel A2

METAL



CODE	SIZE	€/100	INSTALLATION KEY		
D6923IM08	M8	**22,833**	13	250	3.000
D6923IM10	M10	**38,510**	15	250	3.000
D6923IM12	M12	**65,500**	18	250	1.500

DIN-1587 Cup nut

METAL



Available in diferent coatings.
Ask for price and delivery time.

CODE	SIZE	€/100	INSTALLATION KEY		
D158704	M4	**8,120**	7	500	15.000
D158705	M5	**8,607**	8	250	7.500
D158706	M6	**10,083**	10	250	4.000
D158708	M8	**19,667**	13	100	2.400
D158710	M10	**37,933**	17	100	1.600
D158712	M12	**57,560**	19	50	800
D158714	M14	**98,393**	22	50	600
D158716	M16	**104,247**	24	25	300

Blister

CODE	SIZE	€/BAG	PCS.	BAGS
BZ158704	M4	**2,029**	20	20
BZ158705	M5	**2,029**	20	20
BZ158706	M6	**2,029**	10	20
BZ158708	M8	**2,029**	5	20
BZ158710	M10	**2,029**	5	20
BZ158712	M12	**2,029**	3	20

Window Box

CODE	SIZE	€/BOX	PCS.	BOXES
VD158704	M4	**7,480**	75	8
VD158705	M5	**5,289**	50	8
VD158706	M6	**6,193**	50	8
VD158708	M8	**6,042**	25	8
VD158710	M10	**9,320**	20	8
VD158712	M12	**7,073**	10	8

Plain washer DIN-125

METAL

DIN-125

Zinc-plated



Available in diferent coatings.
Ask for price and delivery time.

CODE	SIZE	€/100		
D12503	M3	**0,723**	1.000	45.000
D12504	M4	**0,913**	1.000	45.000
D12505	M5	**1,087**	1.000	45.000
D12506	M6	**1,933**	500	22.500
D12508	M8	**3,110**	250	11.250
D12510	M10	**5,360**	250	6.000
D12512	M12	**9,493**	250	3.000
D12514	M14	**13,057**	200	2.400
D12516	M16	**17,010**	100	2.400
D12518	M18	**21,453**	100	2.400
D12520	M20	**25,187**	50	1.200
D12522	M22	**42,983**	50	1.200
D12524	M24	**58,813**	50	600
D12527	M27	**80,000**	50	600
D12530	M30	**106,450**	50	300
D12533	M33	**172,223**	50	300
D12536	M36	**234,750**	25	300

Blister

CODE	SIZE	€/BAG	PCS.	BAGS
BZ125ZM03	M3	**2,029**	40	20
BZ125ZM04	M4	**2,029**	40	20
BZ125ZM05	M5	**2,029**	40	20
BZ125ZM06	M6	**2,029**	20	20
BZ125ZM08	M8	**2,029**	10	20
BZ125ZM10	M10	**2,029**	10	20
BZ125ZM12	M12	**2,029**	6	20

Window Box

CODE	SIZE	€/BOX	PCS.	BOXES
VD12503	M3	**3,788**	200	8
VD12504	M4	**3,788**	200	8
VD12505	M5	**3,461**	150	8
VD12506	M6	**4,103**	100	8
VD12508	M8	**4,737**	75	8
VD12510	M10	**8,773**	75	8
VD12512	M12	**10,337**	50	8

STAINLESS STEEL

DIN-125 A2

A2 Stainless steel



CODE	SIZE	€/100		
D125IM04	M4	**1,323**	500	22.500
D125IM05	M5	**1,750**	500	22.500
D125IM06	M6	**3,170**	500	22.500
D125IM08	M8	**5,437**	250	11.250
D125IM10	M10	**10,387**	250	6.000
D125IM12	M12	**18,477**	250	3.000
D125IM14	M14	**28,960**	200	2.400
D125IM16	M16	**31,977**	100	2.400
D125IM18	M18	**47,420**	100	1.600
D125IM20	M20	**50,357**	50	1.200
D125IM22	M22	**59,713**	50	1.200
D125IM24	M24	**104,480**	50	600

Blister

CODE	SIZE	€/BAG	PCS.	BAGS
BZ125IM04	M4	**2,565**	10	20
BZ125IM05	M5	**2,565**	8	20
BZ125IM06	M6	**2,565**	8	20
BZ125IM08	M8	**2,565**	6	20
BZ125IM10	M10	**2,565**	5	20

Window Box

CODE	SIZE	€/BOX	PCS.	BOXES
VD125IM04	M4	**3,241**	100	8
VD125IM05	M5	**3,252**	75	8
VD125IM06	M6	**4,108**	75	8
VD125IM08	M8	**4,283**	50	8
VD125IM10	M10	**7,142**	50	8

DIN-9021 Wide plain washer

DIN-9021

Zinc-plated



Available in diferent coatings.
Ask for price and delivery time.

METAL

CODE	SIZE	€/100		
D902103	M3	1,557	500	22.500
D902104	M4	1,810	500	12.000
D902105	M5	1,980	500	12.000
D902106	M6	3,383	500	12.000
D902108	M8	7,927	200	4.800
D902110	M10	14,933	100	2.400
D902112	M12	27,097	100	1.200
D902114	M14	40,573	100	1.200
D902116	M16	46,700	50	600
D902118	M18	92,633	50	600
D902120	M20	97,863	25	300
D902122	M22	243,710	25	300
D902124	M24	264,517	25	150

Blister

CODE	SIZE	€/BAG	PCS.	BAGS
BZ902103	M3	2,029	20	20
BZ902104	M4	2,029	20	20
BZ902105	M5	2,029	20	20
BZ902106	M6	2,029	10	20
BZ902108	M8	2,029	5	20
BZ902110	M10	2,029	5	20
BZ902112	M12	2,029	4	20

Window Box

CODE	SIZE	€/BOX	PCS.	BOXES
VD902103	M3	3,646	125	8
VD902104	M4	3,646	125	8
VD902105	M5	4,036	125	8
VD902106	M6	4,723	100	8
VD902108	M8	5,313	50	8
VD902110	M10	5,860	30	8
VD902112	M12	5,292	15	8

DIN-9021 A2

A2 Stainless steel



STAINLESS STEEL

CODE	SIZE	€/100		
D9021IM04	M4	2,380	500	22.500
D9021IM05	M5	4,357	500	12.000
D9021IM06	M6	7,893	500	8.000
D9021IM08	M8	15,560	200	4.800
D9021IM10	M10	35,207	100	1.600
D9021IM12	M12	60,720	100	800
D9021IM14	M14	131,004	100	800
D9021IM16	M16	132,610	50	600
D9021IM18	M18	237,443	50	400
D9021IM20	M20	266,213	25	300
D9021IM22	M22	274,243	25	200
D9021IM24	M24	315,377	25	150

Blister

CODE	SIZE	€/BAG	PCS.	BAGS
BZ9021IM04	M4	2,565	10	20
BZ9021IM05	M5	2,565	8	20
BZ9021IM06	M6	2,565	8	20
BZ9021IM08	M8	2,565	6	20
BZ9021IM10	M10	2,565	5	20

Window Box

CODE	SIZE	€/BOX	PCS.	BOXES
VD9021IM04	M4	3,508	100	8
VD9021IM05	M5	4,331	75	8
VD9021IM06	M6	7,846	75	8
VD9021IM08	M8	8,250	40	8
VD9021IM10	M10	9,333	20	8

Spring washer

DIN-127

METAL

DIN-127

Spring washer



CODE	SIZE	€/100		
D12703	M3	**0,737**	500	22.500
D12704	M4	**0,913**	500	22.500
D12705	M5	**1,160**	500	22.500
D12706	M6	**1,433**	500	12.000
D12708	M8	**2,943**	200	4.800
D12710	M10	**4,597**	100	2.400
D12712	M12	**6,867**	100	2.400
D12714	M14	**10,597**	100	2.400
D12716	M16	**18,037**	50	1.200
D12718	M18	**19,027**	50	1.200
D12720	M20	**26,300**	25	300
D12722	M22	**30,200**	25	600
D12724	M24	**54,527**	25	600
D12727	M27	**79,700**	25	600
D12730	M30	**146,003**	25	300
D12736	M36	**296,237**	25	300

Available in different coatings.
Ask for price and delivery time.

Blister

CODE	SIZE	€/BAG	PCS.	BAGS
BZ12703	M3	**2,029**	20	20
BZ12704	M4	**2,029**	20	20
BZ12705	M5	**2,029**	20	20
BZ12706	M6	**2,029**	10	20
BZ12708	M8	**2,029**	5	20
BZ12710	M10	**2,029**	5	20
BZ12712	M12	**2,029**	4	20

Window Box

CODE	SIZE	€/BOX	PCS.	BOXES
VD12704	M4	**3,018**	100	8
VD12705	M5	**3,297**	100	8
VD12706	M6	**4,172**	100	8
VD12708	M8	**3,700**	50	8
VD12710	M10	**3,375**	25	8
VD12712	M12	**4,433**	25	8

METAL

DIN-127 A2 *NEW*

Grower spring washer DIN-127.
Stainless steel A2



CODE	SIZE	€/100		
D127IM08	M8	**4,530**	200	9.000
D127IM10	M10	**7,237**	100	4.500
D127IM12	M12	**10,923**	100	4.500

TU-MA Wing nut



Available in diferent coatings.
Ask for price and delivery time.

METAL ZINC

CODE	SIZE	€/100		
TUMAM03	M3	**16,983**	500	12.000
TUMAM04	M4	**17,403**	500	8.000
TUMAM05	M5	**17,733**	250	6.000
TUMAM06	M6	**19,917**	250	6.000
TUMAM08	M8	**27,687**	100	2.400
TUMAM10	M10	**45,197**	100	1.600
TUMAM12	M12	**85,580**	50	1.200
TUMAM14	M14	**278,837**	50	-
TUMAM16	M16	**287,670**	25	300

Blister

CODE	SIZE	€/BAG	PCS.	BAGS
BZTUMAM03	M3	**2,565**	10	20
BZTUMAM04	M4	**2,565**	10	20
BZTUMAM05	M5	**2,565**	10	20
BZTUMAM06	M6	**2,565**	10	20
BZTUMAM08	M8	**2,565**	5	20
BZTUMAM10	M10	**2,565**	5	20
BZTUMAM12	M12	**2,565**	3	20

Window Box

CODE	SIZE	€/BOX	PCS.	BOXES
VTUMAM03	M3	**15,618**	75	8
VTUMAM04	M4	**16,004**	75	8
VTUMAM05	M5	**11,310**	50	8
VTUMAM06	M6	**12,210**	50	8
VTUMAM08	M8	**8,489**	25	8
VTUMAM10	M10	**11,525**	20	8
VTUMAM12	M12	**10,913**	10	8

DIN-6798 A Serrated lock washer external teeth



Available in diferent coatings.
Ask for price and delivery time.

METAL ZINC

CODE	SIZE	€/100		
D6798A03	M3	**1,280**	500	22.500
D6798A04	M4	**1,513**	500	22.500
D6798A05	M5	**1,650**	500	22.500
D6798A06	M6	**2,283**	500	22.500
D6798A08	M8	**4,447**	250	11.250
D6798A10	M10	**8,430**	250	11.250
D6798A12	M12	**9,787**	100	4.500
D6798A14	M14	**15,237**	100	4.500
D6798A16	M16	**18,873**	100	4.500



PLUGS, TIPS AND ACCESORIES

B-HDS

SDS-plus drill bits. High quality



SOLID


Stone


Reinforced concrete


Aerated concrete


Hollow concrete


Concrete

CODE	SIZE	€/PC	MIN. ORDER QTY.		
BHDS06110	Ø6 x 110	**21,231**	2	1	50
BHDS06160	Ø6 x 160	**21,725**	2	1	100
BHDS06210	Ø6 x 210	**23,286**	2	1	150
BHDS08110	Ø8 x 110	**21,725**	2	1	50
BHDS08160	Ø8 x 160	**22,705**	2	1	100
BHDS08210	Ø8 x 210	**23,776**	2	1	150
BHDS10160	Ø10 x 160	**24,301**	2	1	100
BHDS10210	Ø10 x 210	**27,615**	2	1	150
BHDS12160	Ø12 x 160	**27,164**	2	1	100
BHDS12210	Ø12 x 210	**29,740**	2	1	150
BHDS16210	Ø16 x 210	**45,938**	2	1	150
BHDS16310	Ø16 x 260	**47,705**	2	1	200

PU

Bits

PU-PH

PH



METAL

CODE		€/100	LENGTH		
PUPHC01	PH1	**81,713**	25	25	1.125
PUPHC02	PH2	**81,713**	25	25	1.125
PUPHC03	PH3	**81,713**	25	25	1.125
PUPHL01	PH1	**131,080**	50	25	1.125
PUPHL02	PH2	**131,080**	50	25	1.125
PUPHL03	PH3	**131,080**	50	25	1.125

Blister

CODE	SIZE	€/BAG	PCS.	BAGS
BZPUPHCL01	N°1 / 50	**3,427**	4	20
BZPUPHCL02	N°2 / 50	**3,427**	4	20
BZPUPHCL03	N°3 / 50	**3,427**	4	20

PU-TO



Tx



METAL

CODE		€/100	LENGTH		
PUTO010	TX10	**92,060**	25	25	1.125
PUTO015	TX15	**92,060**	25	25	1.125
PUTO020	TX20	**92,060**	25	25	1.125
PUTO025	TX25	**92,060**	25	25	1.125
PUTO030	TX30	**92,060**	25	25	1.125
PUTO040	TX40	**92,060**	25	25	1.125

Blister

CODE	SIZE	€/BAG	PCS.	BAGS
BZPUTOT01	T10+T20	**3,427**	2	20
BZPUTOT02	T30+T40	**3,427**	2	20

Bits

PU

METAL

PU-OX

OXBIT





CODE		€/100	LENGTH		
PUOXBITC10	OXB-10	115,077	25	25	1.125
PUOXBITC15	OXB-15	115,077	25	25	1.125
PUOXBITC20	OXB-20	115,077	25	25	1.125
PUOXBITC25	OXB-25	115,077	25	25	1.125
PUOXBITC30	OXB-30	115,077	25	25	1.125
PUOXBITC40	OXB-40	115,077	25	25	1.125
PUOXBITL10	OXB-10	197,073	50	25	1.125
PUOXBITL15	OXB-15	197,073	50	25	1.125
PUOXBITL20	OXB-20	197,073	50	25	1.125
PUOXBITL25	OXB-25	197,073	50	25	1.125
PUOXBITL30	OXB-30	197,073	50	25	1.125
PUOXBITL40	OXB-40	197,073	50	25	1.125

CHARACTERISTICS

Fits perfectly on the screw:
Guaranteeing that the screw is completely fixed to the bit, allowing for an ergonomic installation in any position and improving the screw guide.

Optimum transmission of force:
Ensuring the perfect fit in the mortise, increasing the tightening surface and optimising the tightening torque transmission.

Anti Cam-Out:
The OXBIT bits reduce the "Cam-Out" effect, which is especially high in machinery works and which can cause the bit to slide out of the screw mortises. This increases the useful life of the bits and the mortises.

Ideal for high performance applications:
Especially designed to guarantee transmission in works with high torque values as it withstands high speeds and the torque of impact drivers.

Less effort:
It increases transmission of the torque, allowing for installation with less effort, even with elevated torques.

Increases the bit's useful life:
Thanks to the design of the OXBIT bits and their perfect fitting with the mortises, it is possible to extend both the useful life of the bits and the mortises.

METAL

PU-PO

PZ





CODE		€/100	LENGTH		
PUPOC01	PZ1	81,713	25	25	1.125
PUPOC02	PZ2	81,713	25	25	1.125
PUPOC03	PZ3	81,713	25	25	1.125
PUPOL01	PZ1	131,080	50	25	1.125
PUPOL02	PZ2	131,080	50	25	1.125
PUPOL03	PZ3	131,080	50	25	1.125

Blister

CODE	SIZE	€/BAG	PCS.	BAGS
BZPUPOCL01	N°1 / 50	3,427	4	20
BZPUPOCL02	N°2 / 50	3,427	4	20
BZPUPOCL03	N°3 / 50	3,427	4	20

METAL

PU-CU

Square



CODE		€/100	LENGTH		
PUCUC01	PC1	81,713	25	25	1.125
PUCUC02	PC2	81,713	25	25	1.125
PUCUC03	PC3	81,713	25	25	1.125
PUCUL01	PC1	131,080	50	25	1.125
PUCUL02	PC2	131,080	50	25	1.125
PUCUL03	PC3	131,080	50	25	1.125

BOCA

Magnetic hexagonal nut setter

METAL



CODE	SIZE	€/100	INSTALLATION KEY	LENGTH		
BOCA006	6 mm.	**603,317**	1/4"	65	5	225
BOCA007	7 mm.	**603,317**	1/4"	65	5	225
BOCA008	8 mm.	**603,317**	1/4"	65	5	225
BOCA010	10 mm.	**603,317**	1/4"	65	5	225

Blister

CODE	SIZE	€/BAG	PCS.	BAGS
BZBOCA008	8 mm.	**4,622**	1	20
BZBOCA010	10 mm.	**4,622**	1	20

PU-PM

1/4'' magnetic bit holder

METAL



CODE	SIZE	€/100	INSTALLATION KEY	LENGTH		
PUPM014	1/4" x 60	**600,457**	1/4"	65	5	225

ATAP

Nylon cover cap in colours, for hexagonal-head screws



METAL | NYLON

CODE		COLOR	€/100		
ATAPO08AR	8	RAL 1001	**7,197**	1.000	2.000
ATAPO08RC	8	RAL 3003	**7,197**	1.000	2.000
ATAPO08RT	8	RAL 3011	**7,197**	1.000	2.000
ATAPO08VN	8	RAL 6028	**7,197**	1.000	2.000
ATAPO08BP	8	RAL 9010	**7,197**	1.000	2.000
ATAPO08NE	8	RAL 9005	**7,197**	1.000	2.000
ATAPO08BO	8	RAL 9002	**7,197**	1.000	2.000
ATAPO10AR	10	RAL 1001	**7,197**	1.000	2.000
ATAPO10RC	10	RAL 3003	**7,197**	1.000	2.000
ATAPO10RT	10	RAL 3011	**7,197**	1.000	2.000
ATAPO10VN	10	RAL 6028	**7,197**	1.000	2.000
ATAPO10BP	10	RAL 9010	**7,197**	1.000	2.000
ATAPO10NE	10	RAL 9005	**7,197**	1.000	2.000
ATAPO10BO	10	RAL 9002	**7,197**	1.000	2.000

PVC caps for DIN-7504-N and DIN-7981 screws — TP-CR

METAL | PVC | Ny NYLON

CODE	SIZE	€/100		
TPCR042BL	Ø4,2	**3,757**	1.000	12.000
TPCR048BL	Ø4,8	**3,757**	1.000	12.000
TPCR055BL	Ø5,5	**3,757**	1.000	6.000

TP-CR B

White

METAL | PVC | Ny NYLON

CODE	SIZE	€/100		
TPCR042NE	Ø4,2	**3,757**	1.000	12.000
TPCR048NE	Ø4,8	**3,757**	1.000	12.000
TPCR055NE	Ø5,5	**3,757**	1.000	6.000

TP-CR N

Black



Plastic caps and self-adhesive screw covers — TP-TP

WOOD | PVC | Ny NYLON

CODE	COLOR	DIAMETER	€/100		
TPTPADBE	BEIGE	14	**3,710**	1.000	24.000
TPTPADBL	WHITE	14	**3,710**	1.000	24.000
TPTPADCA	MAHOGANYA	14	**3,710**	1.000	24.000
TPTPADCE	CHERRY	14	**3,710**	1.000	24.000
TPTPADGR	GREY	14	**3,710**	1.000	24.000
TPTPADHA	BEECH	14	**3,710**	1.000	24.000
TPTPADNE	BLACK	14	**3,710**	1.000	24.000
TPTPADNO	WALNUT	14	**3,710**	1.000	24.000
TPTPADPI	PINE	14	**3,710**	1.000	24.000
TPTPADRO	OAK	14	**3,710**	1.000	24.000
TPTPADSA	SAPELLY	14	**3,710**	1.000	24.000



Blister

CODE	COLOR	€/BAG	PCS.	BAGS
BZTPTPADBE		**2,029**	20	25
BZTPTPADBL		**2,029**	20	25
BZTPTPADCA		**2,029**	20	25
BZTPTPADCE		**2,029**	20	25
BZTPTPADGR		**2,029**	20	25
BZTPTPADHA		**2,029**	20	25
BZTPTPADNE		**2,029**	20	25
BZTPTPADNO		**2,029**	20	25
BZTPTPADPI		**2,029**	20	25
BZTPTPADRO		**2,029**	20	25
BZTPTPADSA		**2,029**	20	25

Strips **Cross-selling**

Sales hook products for specific places.
Cross-sales allow for an increase in sales of **related or complementary products**, placing them together at the point of sale.

Coloured plugs are a good example of this type of sales.
It is a complementary product for all wood screw types.

ADVANTAGES:

- **Encourages self-service** on the sales floor.
- **Increases impulse buys** and maximizes cross-selling of products.
- **Creates value** for the end customer.

How to achieve it? Together with your order for plugs in blister pack format, ask your INDEX sales representative for a Cross-sale strip. (Code: TIRAEASY).





HEAVY-DUTY METALCLAMPS

HEAVY-DUTY METAL CLAMPS

	SIZES (mm)	RECOMMENDED LOAD kg	COATING	THICKNESS (mm)	WIDTH (mm)	OPENING	COUPLING NUT	ASSESSMENT	ISOPHONIC	CTE
AB-RA	**APPLICATIONS: Sanitation, Electric**									P. 234
	Ø 15 - Ø 125	80	ZINC	1,5	20	**Fast lateral**	M8	-	-	-
AB-IA	**APPLICATIONS: HSW and CW, Gas, Sanitation, Heating, Air Conditioning, Electric, Ventilation**									P. 235
	Ø 15 - Ø 125	80	ZINC	1,5	20	**Fast lateral**	M8	-	✓	✓
AB-IR	**APPLICATIONS: HSW and CW, Gas, Sanitation, Heating, Air Conditioning, Electric, Ventilation**									P. 235
	Ø 15 - Ø 60	60	ZINC	1,25	19	**Fast vertical**	M8	-	✓	✓
AB-RE AB-RE V	**APPLICATIONS: Sanitation, Electric, Ventilation**									P. 236
	Ø 18 - Ø 1250	150 - 200	ZINC	1,8 - 2,3	19	**Screw**	M8 / M10	-	-	-
AB-RI AB-RI V	**APPLICATIONS: HSW and CW, Gas, Sanitation, Heating, Air Conditioning, Electric, Ventilation**									P. 238
	Ø 18 - Ø 1250	150 - 200	ZINC	1,8 - 2,3	19	**Screw**	M8 / M10	-	✓	✓
AB-RE A2 AB-RE A4	**APPLICATIONS: HSW and CW, Gas, Sanitation, Heating, Air Conditioning, Electric, Ventilation**									P. 237
	Ø 18 - Ø 1250	150 - 200	A2 INOX AISI 304 / A4 INOX AISI 316 AB-RE A2 AB-RE A4	1,8 - 2,3	19	**Screw**	M8 / M10	-	✓	✓
AB-RI A2 AB-RI A4	**APPLICATIONS: HSW and CW, Gas, Sanitation, Heating, Air Conditioning, Electric, Ventilation**									P. 239
	Ø 18 - Ø 1250	150 - 200	A2 INOX AISI 304 / A4 INOX AISI 316 AB-RI A2 AB-RI A4	1,8 - 2,3	19	**Screw**	M8 / M10	-	✓	✓
AB-RI DES	**APPLICATIONS: Sanitation, Electric**									P. 240
	Ø 16 - Ø 160	150	ZINC	1,2 - 2,0	20	**Fast lateral**	M8 / M10	-	✓	✓
AB-ICP	**APPLICATIONS: HSW and CW, Gas, Sanitation, Heating, Air Conditioning, Electric, Ventilation**									P. 240
	Ø 60 - Ø 135	200	ZINC	2,75 - 4,0	30 - 40	**Screw**	M8 / M10 M10 / M12 M12 / M16	-	✓	✓

	SIZES (mm)	RECOMMENDED LOAD kg	COATING	THICKNESS (mm)	WIDTH (mm)	OPENING	COUPLING NUT	ASSESSMENT	ISOPHONIC	CTE	
AB-AIS	APPLICATIONS: HSW and CW, Gas, Sanitation, Heating, Air Conditioning, Electric, Ventilation										P. 241
	Ø 10 - Ø 219	150 - 200	ZINC	13 - 40	20 - 40	**AB-AIS 13 & 19** **Fast lateral** **AB-AIS 30 & 40** **Screw**	M8 / M10 M8 / M10 M12 / M16	-	✓	✓	
AB-GA	APPLICATIONS: Gas										P. 242
	Ø 18 - Ø 160	150 - 200	YELLOW	2	19	**Screw**	M8 ≤ Ø54 M8 / M10 > Ø54	According to UNE-EN ISO 4892	-	-	
AB-M8	APPLICATIONS: Sanitation, Drainpipe										P. 242
	Ø 50 - Ø 315	100	ZINC	1	28	**Screw**	M8	-	-	-	
AB-DE Z AB-DE G	APPLICATIONS: Sanitation, Drainpipe										P. 243
	Ø 75 - Ø 315	200	ZINC AB-DE Z ATLANTIS AB-DE G	2,5	20	**Screw**	M8	-	-	-	
AB-DP Z AB-DP G	APPLICATIONS: Sanitation, Drainpipe										P. 243
	Ø 75 - Ø 250	200	ZINC AB-DP Z ATLANTIS AB-DP G	2,5	20	**Screw**	-	-	-	-	
AB-ZI	APPLICATIONS: Gas, Sanitation										P. 244
	Ø 16 - Ø 230	250 - 350	ZINC	M6 - M8 - M10	-	-	-	-	-	-	
AB-SA	APPLICATIONS: Gas, Sanitation										P. 245
	-	-	ZINC	5 - 6	-	-	-	-	-	-	
AB-GP	APPLICATIONS: Sanitation, Industrial										P. 245
	Ø 25 - Ø 235	-	ZINC	0,6 - 1,8	18 -25	**Screw**	-	-	-	-	

AB-RA

Reinforced pipe clamp M8 opened



02 P. 390 Technical info.

LATERAL OPENING



INSTALLATION

EXPRESS

PVC pipes | Cooper tipe | Steel pipe | ZINC

CODE	SIZE	€/100	SIZE IN INCHES	ØD(MM)	MAXIMUN LOAD		
ABRA015	15 (M8)	**84,257**	1/4"	12-16	80	50	300
ABRA018	18 (M8)	**84,610**	3/8"	15 - 19	80	50	300
ABRA022	22 (M8)	**90,480**	1/2"	20 - 25	80	50	200
ABRA028	28 (M8)	**94,257**	3/4"	26 - 30	80	50	200
ABRA035	35 (M8)	**100,307**	1"	32 - 36	80	50	150
ABRA042	42 (M8)	**105,600**	1 1/4"	38 - 43	80	50	150
ABRA048	48 (M8)	**115,680**	1 1/2"	47 - 51	80	50	100
ABRA054	54 (M8)	**121,557**	-	53 - 58	80	25	100
ABRA060	60 (M8)	**127,263**	2"	60 - 64	80	25	75
ABRA075	75 (M8)	**142,693**	2 1/2"	75 - 80	80	25	50
ABRA090	90 (M8)	**151,773**	3"	87 - 92	80	25	50
ABRA100	100 (M8)	**170,450**	3 1/2"	99 - 105	80	25	50
ABRA110	110 (M8)	**171,220**	-	107 - 112	80	25	50
ABRA115	115 (M8)	**197,070**	4"	113 - 118	80	25	50
ABRA125	125 (M8)	**196,783**	4 1/2"	125 - 130	80	25	50

APPLICATION EXAMPLES





Reinforced isophonic pipe clamp M8 opened

AB-IA

PVC pipes | Cooper tipe | Steel pipe | ZINC

CODE	SIZE	€/100	SIZE IN INCHES	ØD(MM)	MAXIMUN LOAD		
ABIA015	15 (M8)	**93,520**	1/4"	12-16	80	50	200
ABIA018	18 (M8)	**99,010**	3/8"	15 - 19	80	50	200
ABIA022	22 (M8)	**105,090**	1/2"	20 - 25	80	50	150
ABIA028	28 (M8)	**109,683**	3/4"	26 - 30	80	50	100
ABIA035	35 (M8)	**117,257**	1"	32 - 36	80	50	100
ABIA042	42 (M8)	**130,363**	1 1/4"	38 - 43	80	50	-
ABIA048	48 (M8)	**148,570**	1 1/2"	47 - 51	80	50	-
ABIA054	54 (M8)	**155,127**	-	53 - 58	80	25	50
ABIA060	60 (M8)	**168,160**	2"	60 - 64	80	25	50
ABIA075	75 (M8)	**188,100**	2 1/2"	75 - 80	80	25	50
ABIA090	90 (M8)	**208,983**	3"	87 - 92	80	25	50
ABIA100	100 (M8)	**231,280**	3 1/2"	99 - 105	80	25	50
ABIA110	110 (M8)	**238,590**	-	107 - 112	80	25	-
ABIA115	115 (M8)	**275,763**	4"	113 - 118	80	25	-
ABIA125	125 (M8)	**295,083**	4 1/2"	125 - 130	80	25	-



02 P. 390 Technical info.

LATERAL OPENING



INSTALLATION

EXPRESS

CTE CÓDIGO TÉCNICO DE LA EDIFICACIÓN

APPLICATION EXAMPLES





Isophonic pipe clamp M8 fast-clip

AB-IR

PVC pipes | Cooper tipe | Steel pipe | ZINC

CODE	SIZE	€/100	SIZE IN INCHES	ØD(MM)	MAXIMUN LOAD		
ABIR015	15 (M8)	**85,663**	1/4"	14 - 15	60	50	300
ABIR018	18 (M8)	**91,600**	3/8"	16 - 19	60	50	300
ABIR022	22 (M8)	**95,560**	1/2"	21 - 23	60	50	200
ABIR028	28 (M8)	**105,510**	3/4"	26 - 28	60	50	150
ABIR035	35 (M8)	**115,610**	1"	32 - 35	60	50	100
ABIR040	40 (M8)	**130,427**	1 1/4"	40 - 43	60	25	100
ABIR048	48 (M8)	**142,977**	1 1/2"	48 - 51	60	25	100
ABIR054	54 (M8)	**150,640**	-	52 - 56	60	25	75
ABIR060	60 (M8)	**158,170**	2"	57 - 60	60	25	75



02 P. 390 Technical info.

VERTICAL OPENING



INSTALLATION

EXPRESS

CTE CÓDIGO TÉCNICO DE LA EDIFICACIÓN

APPLICATION EXAMPLES





AB-RE

Reinforced pipe clamp M8 + M10

AB-RE

Zinc-plated



02 P. 391 Technical info.

REINFORCED

M8 +M10

APPLICATION EXAMPLES





PVC pipes · Cooper tipe · Steel pipe · ZINC

CODE	SIZE	€/100	SIZE IN INCHES	ØD(MM)	MAXIMUN LOAD		
ABRE018	18 (M8+M10)	**115,440**	3/8"	15 - 19	150	50	300
ABRE022	22 (M8+M10)	**118,903**	1/2"	20 - 25	150	50	200
ABRE028	28 (M8+M10)	**132,020**	3/4"	26 - 30	150	50	150
ABRE035	35 (M8+M10)	**141,703**	1"	32 - 36	150	50	100
ABRE040	40 (M8+M10)	**148,750**	1 1/4"	38 - 43	150	25	100
ABRE048	48 (M8+M10)	**159,057**	1 1/2"	47 - 51	150	25	100
ABRE054	54 (M8+M10)	**169,667**	-	53 - 56	150	25	75
ABRE060	60 (M8+M10)	**179,513**	2"	60 - 64	150	25	75
ABRE070	70 (M8+M10)	**187,647**	-	68 - 72	150	25	50
ABRE075	75 (M8+M10)	**192,560**	2 1/2"	75 - 80	150	25	50
ABRE083	83 (M8+M10)	**200,873**	-	81 - 86	150	25	-
ABRE090	90 (M8+M10)	**216,163**	3"	87 - 92	150	25	-
ABRE100	100 (M8+M10)	**222,550**	3 1/2"	99 - 105	150	25	-
ABRE110	110 (M8+M10)	**241,380**	-	107 - 112	200	25	-
ABRE115	115 (M8+M10)	**271,863**	4"	113 - 118	200	25	-
ABRE125	125 (M8+M10)	**290,640**	4 1/2"	125 - 130	200	25	-
ABRE133	133 (M8+M10)	**318,340**	-	132 - 137	200	25	-
ABRE140	140 (M8+M10)	**360,323**	5"	138 - 142	200	25	-
ABRE150	150 (M8+M10)	**366,327**	-	148 - 152	200	25	-
ABRE160	160 (M8+M10)	**384,347**	6"	159 - 166	200	25	-
ABRE180	180 (M8+M10)	**407,917**	-	179 - 184	200	25	-
ABRE200	200 (M8+M10)	**443,650**	-	199 - 212	200	25	-
ABRE220	220 (M8+M10)	**505,723**	8"	215 - 226	200	25	-
ABRE250	250 (M8+M10)	**560,390**	-	245 - 254	200	25	-
ABRE280	280 (M8+M10)	**640,220**	-	278 - 284	200	25	-
ABRE300	300 (M8+M10)	**720,050**	-	299 - 304	200	25	-
ABRE315	315 (M8+M10)	**809,773**	-	314 - 319	200	25	-
ABRE355	355 (M8+M10)	**1.026,160**	-	354 - 359	200	25	-

Self-Service

CODE	SIZE	€/BAG	PCS.	BAGS
LSABRET022	22	**5,087**	2	5
LSABRET028	28	**5,210**	2	5
LSABRET035	35	**5,325**	2	5
LSABRET040	40	**5,468**	2	5
LSABRET048	48	**5,360**	2	5
LSABRET060	60	**5,611**	2	5
LSABRET075	75	**5,888**	2	5
LSABRET090	90	**7,226**	2	5
LSABRET110	110	**7,496**	2	5
LSABRET125	125	**8,665**	2	4

KIT
AB-RE + ES-DR + T4S



AB-RE V

Reinforced pipe clamp, M8 + M10. Ventilation



02 P. 377 Technical info.

REINFORCED

M8 +M10

PVC pipes · Cooper tipe · Steel pipe · ZINC

CODE	SIZE	€/100	SIZE IN INCHES	ØD(MM)	MAXIMUN LOAD		
ABRE250	250 (M8+M10)	**560,390**	-	245 - 254	200	25	-
ABRE280	280 (M8+M10)	**640,220**	-	278 - 284	200	25	-
ABRE300	300 (M8+M10)	**720,050**	-	299 - 304	200	25	-
ABRE315	315 (M8+M10)	**809,773**	-	314 - 319	200	25	-
ABRE355	355 (M8+M10)	**1.026,160**	-	354 - 359	200	25	-
ABRE400	400 (M8+M10)	**1.212,443**	-	399 - 404	200	25	-
ABRE450	450 (M8+M10)	**1.478,517**	-	449 - 454	200	10	-
ABRE500	500 (M8+M10)	**1.455,087**	-	499 - 504	200	10	-
ABRE560	560 (M8+M10)	**1.740,553**	-	555 - 561	200	10	-
ABRE600	600 (M8+M10)	**1.852,463**	-	599 - 604	200	10	-
ABRE630	630 (M8+M10)	**1.981,940**	-	625 - 631	200	10	-
ABRE710	710 (M8+M10)	**2.234,333**	-	705 - 711	200	10	-
ABRE800	800 (M8+M10)	**2.471,980**	-	799 - 804	200	10	-
ABRE900	900 (M8+M10)	**2.740,407**	-	899 - 904	200	10	-
ABRE910	1000 (M8+M10)	**3.070,133**	-	999 - 1.004	200	10	-
ABRE911	1120 (M8+M10)	**3.361,427**	-	1.115 - 1.121	200	10	-
ABRE912	1250 (M8+M10)	**3.691,750**	-	1.245 - 1.251	200	10	-

Reinforced pipe clamp M8 + M10 AB-RE

STAINLESS STEEL

Satinless steel pipe | PVC pipes | A2 INOX AISI 316

AB-RE A2

A2 Stainless steel

CODE	SIZE	€/100	SIZE IN INCHES	ØD(MM)	MAXIMUN LOAD		
ABREA2018	18 (M8+M10)	**350,963**	3/8"	15 - 18	150	50	300
ABREA2022	22 (M8+M10)	**369,093**	1/2"	20 - 24	150	50	200
ABREA2028	28 (M8+M10)	**405,210**	3/4"	26 - 30	150	50	150
ABREA2035	35 (M8+M10)	**423,987**	1"	32 - 36	150	50	100
ABREA2040	40 (M8+M10)	**448,793**	1 1/4"	36 - 42	150	25	100
ABREA2048	48 (M8+M10)	**473,157**	1 1/2"	47 - 50	150	25	100
ABREA2054	54 (M8+M10)	**499,703**	-	51 - 55	150	25	75
ABREA2060	60 (M8+M10)	**531,453**	2"	60 - 64	150	25	75
ABREA2075	75 (M8+M10)	**601,983**	2 1/2"	75 - 80	150	25	50
ABREA2090	90 (M8+M10)	**692,637**	3"	87 - 92	150	25	-
ABREA2110	110 (M8+M10)	**749,337**	-	106 - 112	150	25	-
ABREA2115	115 (M8+M10)	**781,637**	4"	114 - 119	150	25	-
ABREA2125	125 (M8+M10)	**838,380**	4 1/2"	124 - 131	150	25	-
ABREA2140	140 (M8+M10)	**926,653**	5"	133 - 140	150	25	-
ABREA2160	160 (M8+M10)	**1.057,567**	6"	159 - 163	150	25	-
ABREA2200	200 (M8+M10)	**1.475,183**	-	199 - 212	150	25	-



02 P. 392 Technical info.

REINFORCED



M8 +M10



STAINLESS STEEL

Satinless steel pipe | PVC pipes | A4 INOX AISI 316

AB-RE A4

A4 Stainless steel

CODE	SIZE	€/100	SIZE IN INCHES	ØD(MM)	MAXIMUN LOAD		
ABREA4018	18 (M8+M10)	**449,050**	3/8"	15 - 18	150	50	300
ABREA4022	22 (M8+M10)	**474,767**	1/2"	20 - 24	150	50	200
ABREA4028	28 (M8+M10)	**507,057**	3/4"	26 - 30	150	50	150
ABREA4035	35 (M8+M10)	**529,697**	1"	32 - 36	150	50	100
ABREA4040	40 (M8+M10)	**568,197**	1 1/4"	36 - 42	150	25	100
ABREA4048	48 (M8+M10)	**613,867**	1 1/2"	47 - 50	150	25	100
ABREA4054	54 (M8+M10)	**640,433**	-	51 - 55	150	25	75
ABREA4060	60 (M8+M10)	**682,693**	2"	60 - 64	150	25	75
ABREA4075	75 (M8+M10)	**757,447**	2 1/2"	75 - 80	150	25	50
ABREA4090	90 (M8+M10)	**830,587**	3"	87 - 92	150	25	-
ABREA4110	110 (M8+M10)	**956,430**	-	106 - 112	150	25	-
ABREA4115	115 (M8+M10)	**1.026,100**	4"	114 - 119	150	25	-
ABREA4125	125 (M8+M10)	**1.081,013**	4 1/2"	124 - 131	150	25	-
ABREA4140	140 (M8+M10)	**1.279,617**	5"	133 - 140	150	25	-
ABREA4160	160 (M8+M10)	**1.404,623**	-	159 - 163	150	25	-
ABREA4200	200 (M8+M10)	**1.704,457**	-	199 - 212	150	25	-



02 P. 392 Technical info.

REINFORCED



M8 +M10



APPLICATION EXAMPLES











AB-RI

Reinforced isophonic pipe clamp M8 + M10

AB-RI

Zinc-plated



02 P. 391 Technical info.

CTE CÓDIGO TÉCNICO DE LA EDIFICACIÓN

REINFORCED

M8 +M10



PVC pipes Cooper tipe Steel pipe ZINC

CODE	SIZE	€/100	SIZE IN INCHES	ØD(MM)	MAXIMUN LOAD		
ABRI018	18 (M8+M10)	**136,453**	3/8"	15 - 19	150	50	200
ABRI022	22 (M8+M10)	**145,253**	1/2"	20 - 25	150	50	150
ABRI028	28 (M8+M10)	**156,517**	3/4"	26 - 30	150	50	150
ABRI035	35 (M8+M10)	**165,517**	1"	32 - 36	150	50	100
ABRI040	40 (M8+M10)	**188,043**	1 1/4"	38 - 43	150	25	75
ABRI048	48 (M8+M10)	**202,687**	1 1/2"	47 - 51	150	25	75
ABRI054	54 (M8+M10)	**213,950**	-	53 - 56	150	25	50
ABRI060	60 (M8+M10)	**236,467**	2"	60 - 64	150	25	50
ABRI070	70 (M8+M10)	**244,910**	-	68 - 72	150	25	-
ABRI075	75 (M8+M10)	**272,440**	2 1/2"	75 - 80	150	25	-
ABRI083	83 (M8+M10)	**275,870**	-	81 - 86	150	25	-
ABRI090	90 (M8+M10)	**303,577**	3"	87 - 92	150	25	-
ABRI100	100 (M8+M10)	**315,287**	3 1/2"	99 - 105	150	25	-
ABRI110	110 (M8+M10)	**365,957**	-	107 - 112	200	25	-
ABRI115	115 (M8+M10)	**388,473**	4"	113 - 118	200	25	-
ABRI125	125 (M8+M10)	**425,077**	4 1/2"	125 - 130	200	25	-
ABRI133	133 (M8+M10)	**430,713**	-	132 - 137	200	25	-
ABRI140	140 (M8+M10)	**484,200**	5"	138 - 142	200	25	-
ABRI150	150 (M8+M10)	**494,897**	-	148 - 152	200	25	-
ABRI160	160 (M8+M10)	**534,857**	6"	159 - 166	200	25	-
ABRI180	180 (M8+M10)	**548,987**	-	179 - 184	200	25	-
ABRI200	200 (M8+M10)	**608,057**	-	199 - 212	200	25	-
ABRI220	220 (M8+M10)	**698,140**	8"	215 - 226	200	25	-
ABRI250	250 (M8+M10)	**784,863**	-	245 - 254	200	25	-
ABRI280	280 (M8+M10)	**839,010**	-	278 - 284	200	25	-
ABRI300	300 (M8+M10)	**893,153**	-	299 - 304	200	25	-
ABRI315	315 (M8+M10)	**994,400**	-	314 - 319	200	25	-
ABRI355	355 (M8+M10)	**1.398,647**	-	354 - 359	200	25	-

APPLICATION EXAMPLES





Self-Service

CODE	SIZE	€/BAG	PCS.	BAGS
LSABRIT022	22	**5,553**	2	5
LSABRIT028	28	**5,711**	2	5
LSABRIT035	35	**5,904**	2	5
LSABRIT040	40	**5,904**	2	5
LSABRIT048	48	**6,120**	2	5
LSABRIT060	60	**6,544**	2	5
LSABRIT075	75	**7,057**	2	5
LSABRIT090	90	**8,110**	2	5
LSABRIT110	110	**9,502**	2	4

KIT
AB-RI + ES-DR + T4S



AB-RI V

Reinforced isophonic pipe clamp M8 + M10. Ventilation



02 P. 377 Technical info.

CTE CÓDIGO TÉCNICO DE LA EDIFICACIÓN

REINFORCED

M8 +M10



PVC pipes Cooper tipe Steel pipe ZINC

CODE	SIZE	€/100	SIZE IN INCHES	ØD(MM)	MAXIMUN LOAD		
ABRI250	250 (M8+M10)	**784,863**	-	245 - 254	200	25	-
ABRI280	280 (M8+M10)	**839,010**	-	278 - 284	200	25	-
ABRI300	300 (M8+M10)	**893,153**	-	299 - 304	200	25	-
ABRI315	315 (M8+M10)	**994,400**	-	314 - 319	200	25	-
ABRI355	355 (M8+M10)	**1.398,647**	-	354 - 359	200	25	-
ABRI400	400 (M8+M10)	**1.518,070**	-	399 - 404	200	25	-
ABRI450	450 (M8+M10)	**1.828,133**	-	449 - 454	200	10	-
ABRI500	500 (M8+M10)	**1.876,140**	-	499 - 504	200	10	-
ABRI560	560 (M8+M10)	**2.082,227**	-	555 - 561	200	10	-
ABRI600	600 (M8+M10)	**2.296,567**	-	599 - 604	200	10	-
ABRI630	630 (M8+M10)	**2.493,600**	-	625 - 631	200	10	-
ABRI710	710 (M8+M10)	**2.889,580**	-	705 - 711	200	10	-
ABRI800	800 (M8+M10)	**3.139,883**	-	799 - 804	200	10	-
ABRI900	900 (M8+M10)	**3.564,213**	-	899 - 904	200	10	-
ABRI910	1000 (M8+M10)	**4.062,897**	-	999 - 1.004	200	10	-
ABRI911	1120 (M8+M10)	**4.488,487**	-	1.115 - 1.121	200	10	-
ABRI912	1250 (M8+M10)	**4.912,803**	-	1.245 - 1.251	200	10	-

Reinforced isophonic pipe clamp M8 + M10 AB-RI

STAINLESS STEEL

Satinless steel pipe | PVC pipes | Steel pipe

AB-RI A2

A2 Stainless steel

CODE	SIZE	€/100	SIZE IN INCHES	ØD(MM)	MAXIMUN LOAD		
ABRIA2018	18 (M8+M10)	**452,633**	3/8"	15 - 18	150	50	200
ABRIA2022	22 (M8+M10)	**465,123**	1/2"	20 - 24	150	50	150
ABRIA2028	28 (M8+M10)	**485,820**	3/4"	26 - 30	150	50	150
ABRIA2035	35 (M8+M10)	**511,127**	1"	32 - 36	150	50	100
ABRIA2040	40 (M8+M10)	**538,987**	1 1/4"	36 - 42	150	25	75
ABRIA2048	48 (M8+M10)	**571,240**	1 1/2"	47 - 50	150	25	75
ABRIA2054	54 (M8+M10)	**623,673**	-	51 - 55	150	25	50
ABRIA2060	60 (M8+M10)	**657,530**	2"	60 - 64	150	25	50
ABRIA2075	75 (M8+M10)	**740,760**	2 1/2"	75 - 80	150	25	-
ABRIA2090	90 (M8+M10)	**800,907**	3"	87 - 92	150	25	-
ABRIA2110	110 (M8+M10)	**890,610**	-	106 - 112	150	25	-
ABRIA2115	115 (M8+M10)	**915,293**	4"	114 - 119	150	25	-
ABRIA2125	125 (M8+M10)	**986,493**	4 1/2"	124 - 131	150	25	-
ABRIA2140	140 (M8+M10)	**1.021,377**	5"	133 - 140	150	25	-
ABRIA2160	160 (M8+M10)	**1.145,937**	6"	159 - 163	150	25	-



02 P. 392 Technical info.

CTE CÓDIGO TÉCNICO DE LA EDIFICACIÓN

REINFORCED

M8 +M10



STAINLESS STEEL

Satinless steel pipe | PVC pipes | Steel pipe

AB-RI A4

A4 Stainless steel

CODE	SIZE	€/100	SIZE IN INCHES	ØD(MM)	MAXIMUN LOAD		
ABRIA4018	18 (M8+M10)	**536,790**	3/8"	15 - 18	150	50	200
ABRIA4022	22 (M8+M10)	**564,327**	1/2"	20 - 24	150	50	150
ABRIA4028	28 (M8+M10)	**589,053**	3/4"	26 - 30	150	50	150
ABRIA4035	35 (M8+M10)	**633,163**	1"	32 - 36	150	50	100
ABRIA4040	40 (M8+M10)	**682,457**	1 1/4"	36 - 42	150	25	75
ABRIA4048	48 (M8+M10)	**733,720**	1 1/2"	47 - 50	150	25	75
ABRIA4054	54 (M8+M10)	**770,017**	-	51 - 55	150	25	50
ABRIA4060	60 (M8+M10)	**841,693**	2"	60 - 64	150	25	50
ABRIA4075	75 (M8+M10)	**920,903**	2 1/2"	75 - 80	150	25	-
ABRIA4090	90 (M8+M10)	**1.010,433**	3"	87 - 92	150	25	-
ABRIA4110	110 (M8+M10)	**1.191,347**	-	106 - 112	150	25	-
ABRIA4115	115 (M8+M10)	**1.238,547**	4"	114 - 119	150	25	-
ABRIA4125	125 (M8+M10)	**1.312,093**	4 1/2"	124 - 131	150	25	-
ABRIA4140	140 (M8+M10)	**1.422,880**	5"	133 - 140	150	25	-
ABRIA4160	160 (M8+M10)	**1.630,030**	6"	159 - 163	150	25	-



02 P. 392 Technical info.

CTE CÓDIGO TÉCNICO DE LA EDIFICACIÓN

REINFORCED

M8 +M10



APPLICATION EXAMPLES











AB-RI DES

Reinforced isophonic sliding pipe clamp M8+M10



PVC pipes PVC pipes ZINC

CODE	SIZE	€/100	
ABRID016	16	**196,230**	150
ABRID020	20	**204,403**	100
ABRID025	25	**216,667**	100
ABRID032	32	**237,110**	100
ABRID040	40	**257,547**	50
ABRID050	50	**329,090**	50
ABRID063	63	**412,893**	50
ABRID075	75	**470,127**	50
ABRID090	90	**519,183**	50
ABRID110	110	**674,533**	25
ABRID125	125	**817,613**	25
ABRID140	140	**866,670**	20
ABRID160	160	**1.001,577**	20

PA-EX

Expansion guide



METAL ZINC

CODE	SIZE	€/100		
PAEXM08	M8 x 180	**3.408,673**	50	-
PAEXM10	M10 x 180	**3.408,673**	50	-

CO-AR

Articulated hanger



ZINC

CODE	SIZE	€/100		
COAR08060	M8 x 60	**234,460**	50	300
COAR10060	M10 x 60	**360,707**	50	300

AB-ICP

Reinforced isophonic pipe clamp for heavy duty



Steel pipe PVC pipes PVC pipes ZINC

CODE	SIZE	€/100	ØD(MM)	
ABICP060	60 (M8+M10)	**867,593**	60 - 64	25
ABICP075	75 (M10+M12)	**1.060,390**	75 - 80	25
ABICP090	90 (M10+M12)	**1.156,787**	87 - 92	25
ABICP110	110 (M10+M12)	**1.325,487**	107 - 112	25
ABICP140	140 (M12+M16)	**2.313,580**	138 - 142	25
ABICP160	160 (M12+M16)	**2.747,373**	159 - 166	25
ABICP220	220 (M12+M16)	**3.614,967**	215 - 226	10
ABICP270	270 (M12+M16)	**4.529,250**	268 - 274	10
ABICP315	315 (M12+M16)	**5.136,263**	314 - 319	10

Thermal insulation pipe clamp AB-AIS

AB-AIS 13

13 mm



Cooper tipe | Steel pipe | PVC pipes | ZINC

CODE	SIZE	€/100	THICKNESS	
ABAIS13010	Ø10	797,173	13	50
ABAIS13012	Ø12	817,613	13	50
ABAIS13015	Ø15	838,053	13	50
ABAIS13018	Ø18	899,377	13	50
ABAIS13022	Ø22	960,697	13	50
ABAIS13028	Ø28	1.001,577	13	50

AB-AIS 19

19 mm



Cooper tipe | Steel pipe | PVC pipes | ZINC

CODE	SIZE	€/100	THICKNESS	
ABAIS19010	Ø10	981,137	19	50
ABAIS19012	Ø12	1.001,577	19	50
ABAIS19015	Ø15	1.062,900	19	50
ABAIS19017	Ø17	1.062,900	19	50
ABAIS19018	Ø18	1.083,337	19	50
ABAIS19022	Ø22	1.103,777	19	50
ABAIS19028	Ø28	1.185,540	19	50
ABAIS19035	Ø35	1.267,300	19	50
ABAIS19042	Ø42	1.369,503	19	25
ABAIS19054	Ø54	1.553,470	19	25
ABAIS19060	Ø60	1.716,990	19	25
ABAIS19064	Ø64	1.880,513	19	25
ABAIS19067	Ø67	2.003,157	19	25
ABAIS19076	Ø76	2.146,237	19	25
ABAIS19080	Ø80	2.248,437	19	25
ABAIS19114	Ø114	3.066,050	19	10

AB-AIS 30

30 mm



Steel pipe | PVC pipes | ZINC

CODE	SIZE	€/100	THICKNESS	
ABAIS30027	Ø27	1.492,147	30	50
ABAIS30034	Ø34	1.614,787	30	50
ABAIS30042	Ø42	1.716,990	30	25
ABAIS30049	Ø49	1.778,310	30	25
ABAIS30054	Ø54	2.146,237	30	25
ABAIS30060	Ø60	2.187,120	30	25
ABAIS30076	Ø76	2.289,320	30	25
ABAIS30089	Ø89	2.432,400	30	25
ABAIS30108	Ø108	3.372,657	30	10
ABAIS30114	Ø114	3.474,860	30	10

AB-AIS 40

40 mm



Steel pipe | PVC pipes | ZINC

CODE	SIZE	€/100	THICKNESS	
ABAIS40049	Ø49	2.227,997	40	25
ABAIS40060	Ø60	2.616,363	40	25
ABAIS40089	Ø89	3.147,813	40	25
ABAIS40114	Ø114	4.905,683	40	10
ABAIS40133	Ø133	5.294,053	40	10
ABAIS40140	Ø140	5.723,297	40	10
ABAIS40159	Ø159	6.540,913	40	10
ABAIS40168	Ø168	6.949,720	40	10
ABAIS40219	Ø219	8.380,543	40	5

AB-GA

Pipe clamp for gas M8 + M10 yellow coated



02 P. 393 Technical info.

M8 Ø 18-54 mm.
M8/M10 Ø 60-160 mm.

REINFORCED

According to **UNE-EN ISO 4892**

Gas pipe · PVC pipes · Steel pipe · YELLOW

CODE	SIZE	€/100	SIZE IN INCHES	ØD(MM)	MAXIMUN LOAD		
ABGA018	18 (M8)	**102,813**	3/8"	15 - 18	200	50	300
ABGA022	22 (M8)	**108,380**	1/2"	20 - 24	200	50	200
ABGA028	28 (M8)	**115,230**	3/4"	26 - 30	200	50	150
ABGA035	35 (M8)	**123,540**	1"	32 - 36	200	50	100
ABGA040	40 (M8)	**129,953**	1 1/4"	38 - 42	200	50	100
ABGA048	48 (M8)	**136,523**	1 1/2"	47 - 50	200	50	100
ABGA054	54 (M8)	**145,377**	-	52 - 56	200	25	75
ABGA060	60 (M8/M10)	**155,553**	2"	60 - 64	200	25	75
ABGA075	75 (M8/M10)	**185,890**	2 1/2"	75 - 80	200	25	50
ABGA090	90 (M8/M10)	**196,443**	3"	85 - 90	200	25	-
ABGA100	100 (M8/M10)	**215,857**	3 1/2"	99 - 105	200	25	-
ABGA110	110 (M8/M10)	**244,457**	-	107 - 112	200	25	-
ABGA115	115 (M8/M10)	**247,777**	4"	113 - 118	200	25	-
ABGA140	140 (M8/M10)	**290,790**	5"	138 - 142	200	25	-
ABGA160	160 (M8/M10)	**306,830**	6"	159 - 166	200	25	-

Self-Service

CODE	SIZE	€/BAG	PCS.	BAGS
LSABGAT022	22	**5,126**	2	6
LSABGAT028	28	**5,233**	2	6
LSABGAT035	35	**5,148**	2	6
LSABGAT040	40	**5,541**	2	6
LSABGAT048	48	**5,438**	2	6
LSABGAT060	60	**5,817**	2	6
LSABGAT075	75	**6,232**	2	6
LSABGAT090	90	**6,827**	2	6
LSABGAT110	110	**9,232**	2	5

KIT
AB-GA + ES-DR + T4S



APPLICATION EXAMPLES





AB-M8

Drainpipe clamp M8



02 P. 393 Technical info.

DRAINPIPE



PVC pipes · Cooper tipe · Steel pipe · ZINC

CODE	SIZE	€/100	ØD(MM)	MAXIMUN LOAD	
ABM8050	50 (M8)	**150,260**	49 - 54	100	100
ABM8063	63 (M8)	**147,580**	60 - 65	100	100
ABM8075	75 (M8)	**158,830**	75 - 80	100	100
ABM8090	90 (M8)	**169,857**	88 - 92	100	100
ABM8110	110 (M8)	**187,827**	108 - 113	100	100
ABM8125	125 (M8)	**197,013**	124 - 130	100	100
ABM8160	160 (M8)	**244,303**	159 - 165	100	100
ABM8200	200 (M8)	**290,057**	199 - 203	100	100
ABM8250	250 (M8)	**370,703**	249 - 254	100	50
ABM8315	315 (M8)	**803,800**	314 - 319	100	50

Self-Service

CODE	SIZE	€/BAG	PCS.	BAGS
LSABM8090	90	**4,056**	2	6
LSABM8110	110	**4,233**	2	6
LSABM8125	125	**2,893**	1	8
LSABM8160	160	**3,722**	1	4

Recessed drainpipe clamp — AB-DE

PVC pipes | Steel pipe | ZINC

CODE	SIZE	€/100	ØD(MM)	MAXIMUN LOAD	
ABDE075	75	**215,537**	75 - 80	200	100
ABDE090	90	**233,353**	87 - 92	200	100
ABDE110	110	**281,963**	107 - 112	200	100
ABDE125	125	**317,617**	125 - 130	200	50

AB-DE Z

Zinc-plated



02 P. 394 Technical info.

PVC pipes | Steel pipe | ATLANTIS

CODE	SIZE	€/100	ØD(MM)	MAXIMUN LOAD	
ABDE160	160	**369,470**	159 - 166	200	50
ABDE200	200	**444,013**	199 - 212	200	50
ABDE250	250	**713,013**	245 - 254	200	25
ABDE315	315	**894,513**	314 - 319	200	25

AB-DE G

ATLANTIS C2-L coating



02 P. 394 Technical info.

REINFORCED



APPLICATION EXAMPLES





Drainpipe clamp with hole — AB-DP

PVC pipes | Steel pipe | ZINC

CODE	SIZE	€/100	ØD(MM)	MAXIMUN LOAD	
ABDP075	75	**246,317**	75 - 80	200	100
ABDP090	90	**269,003**	87 - 92	200	100
ABDP110	110	**294,277**	107 - 112	200	100
ABDP125	125	**330,580**	125 - 130	200	50

AB-DP Z

Zinc-plated



02 P. 394 Technical info.

PVC pipes | Steel pipe | ATLANTIS

CODE	SIZE	€/100	ØD(MM)	MAXIMUN LOAD	
ABDP160	160	**395,397**	159 - 166	200	50
ABDP200	200	**466,700**	199 - 212	200	25
ABDP250	250	**648,200**	245 - 254	200	25

AB-DP G

ATLANTIS C2-L coating



02 P. 394 Technical info.

REINFORCED



APPLICATION EXAMPLES





AB-ZI

U-bolt

AB-ZI

Zinc-plated



02 P. 395 Technical info.

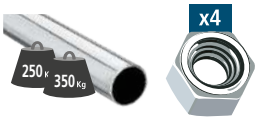

Steel pipe

CODE	SIZE	€/100	Ø ROD INCHES	MAXIMUN LOAD		
AZIM060250	M6 1/4"	**28,983**	1/4"	250	100	800
AZIM060375	M6 3/8"	**29,997**	3/8"	250	100	1.200
AZIM060500	M6 1/2"	**34,423**	1/2"	250	100	600
AZIM060750	M6 3/4"	**40,737**	3/4"	250	100	600
AZIM061000	M6 1"	**43,750**	1"	250	100	400
AZIM061250	M6 1 1/4"	**58,523**	1 1/4"	250	50	300
AZIM081500	M8 1 1/2"	**90,850**	1 1/2"	350	50	150
AZIM082000	M8 2"	**103,557**	2"	350	50	150
AZIM082250	M8 2 1/4"	**120,603**	2 1/4"	350	50	100
AZIM082500	M8 2 1/2"	**127,087**	2 1/2"	350	50	100
AZIM083000	M8 3"	**136,270**	3"	350	50	100
AZIM083500	M8 3 1/2"	**162,327**	3 1/2"	350	50	100
AZIM084000	M8 4"	**200,350**	4"	350	50	100
AZIM084500	M8 4 1/2"	**211,897**	4 1/2"	350	25	100
AZIM085000	M8 5"	**219,310**	5"	350	25	100
AZIM086000	M8 6"	**249,333**	6"	350	25	100
AZIM103000	M10 3"	**186,747**	3"	350	25	50
AZIM103500	M10 3 1/2"	**214,407**	3 1/2"	350	25	50
AZIM104000	M10 4"	**240,840**	4"	350	25	100
AZIM105000	M10 5"	**267,033**	5"	350	25	100
AZIM106000	M10 6"	**308,883**	6"	350	25	100
AZIM108000	M10 8"	**351,467**	8"	350	25	100

AB-ZI A2

A2 Stainless steel



Steel pipe

CODE	SIZE	€/100	Ø ROD INCHES	MAXIMUN LOAD		
AZA2060500	M6 1/2"	**105,883**	1/2"	250	100	600
AZA2060750	M6 3/4"	**123,093**	3/4"	250	100	600
AZA2061000	M6 1"	**151,650**	1"	250	100	400
AZA2061250	M6 1 1/4"	**179,560**	1 1/4"	250	50	300
AZA2081500	M8 1 1/2"	**312,037**	1 1/2"	350	50	150
AZA2082000	M8 2"	**362,937**	2"	350	50	150
AZA2082500	M8 2 1/2"	**408,927**	2 1/2"	350	50	100
AZA2083000	M8 3"	**444,473**	3"	350	50	100
AZA2104000	M10 4"	**904,320**	4"	350	50	-
AZA2106000	M10 6"	**1.166,313**	6"	350	25	-
AZA2108000	M10 8"	**1.395,300**	8"	350	25	-

U-bolt support AB-SA

Steel pipe | ZINC

CODE	SIZE	€/100	LENGTH	
ABSA050100	50 x 100	**491,121**	100	50
ABSA050125	50 x 125	**532,261**	125	50
ABSA050200	50 x 200	**650,676**	200	25
ABSA050300	50 x 300	**786,859**	300	25
ABSA050400	50 x 400	**961,330**	400	25
ABSA050500	50 x 500	**1.404,436**	500	10
ABSA050600	50 x 600	**1.541,632**	600	10
ABSA100100	100 x 100	**652,425**	100	25
ABSA100125	100 x 125	**699,904**	125	25
ABSA100200	100 x 200	**827,277**	200	25
ABSA100300	100 x 300	**1.049,165**	300	10
ABSA100400	100 x 400	**1.403,332**	400	10
ABSA100500	100 x 500	**1.834,349**	500	10



02 P. 395 Technical info.





Heavy duty pipe clamp AB-GP

Flexible pipe | PVC pipes | Cooper tipe | Steel pipe | ZINC

CODE	SIZE	€/100	ØD(MM)		
AGP023025	23-25	**158,223**	23 - 25	50	300
AGP026028	26-28	**164,517**	26 - 28	50	300
AGP029031	29-31	**197,710**	29 - 31	50	200
AGP032035	32-35	**203,113**	32 - 35	50	150
AGP036039	36-39	**204,470**	36 - 39	50	150
AGP040043	40-43	**216,623**	40 - 43	50	100
AGP044047	44-47	**283,990**	44 - 47	50	-
AGP048051	48-51	**296,437**	48 - 51	25	75
AGP052055	52-55	**302,983**	52 - 55	25	75
AGP056059	56-59	**310,183**	56 - 59	25	75
AGP060063	60-63	**323,287**	60 - 63	25	50
AGP064067	64-67	**354,267**	64 - 67	25	50
AGP068073	68-73	**436,403**	68 - 73	25	-
AGP074079	74-79	**441,807**	74 - 79	25	-
AGP080085	80-85	**446,400**	80 - 85	25	-
AGP086091	86-91	**454,863**	86 - 91	25	-
AGP092097	92-97	**476,937**	92 - 97	25	-
AGP098103	98-103	**481,883**	98 - 103	25	-
AGP104112	104-112	**523,323**	104 - 112	25	-
AGP113121	113-121	**558,900**	113 - 121	25	-
AGP122130	122-130	**599,883**	122 - 130	25	-
AGP131139	131-139	**748,500**	131 - 139	25	-
AGP140148	140-148	**764,710**	140 - 148	25	-
AGP149161	149-161	**810,207**	149 - 161	25	-
AGP162174	162-174	**845,777**	162 - 174	25	-



02 P. 396 Technical info.

Rounded edges







APPLICATION EXAMPLES





Blister

CODE	SIZE	€/BAG	PCS.	BAGS
BZAGP023025	23-25	**4,622**	2	10
BZAGP029031	29-31	**4,622**	2	10
BZAGP040043	40-43	**4,622**	2	10



LIGHT METAL CLAMPS

	SIZES (mm)	RECOMMENDED LOAD kg	COATING	THICKNESS (mm)	WIDTH (mm)	OPENING	COUPLING NUT	ASSESSMENT	ISOPHONIC	CTE	PARALLEL ASSEMBLING	SCREW
AB-M6 AB-M6 Z	APPLICATIONS: Gas, Sanitation, Electric									P. 250		
	Ø 8 - Ø 63	70 - 100	B YELLOW C2 / Z ZINC C1 AB-M6 AB-M6 Z	1 - 1,2	12	Fast lateral	Embed M6	-	-	-	-	-
AB-M7 Z	APPLICATIONS: Gas Sanitation Electric									P. 253		
	Ø 8 - Ø 63	70	Z ZINC C1	0,8 - 1	11	-	Embed M7	-	-	-	-	-
AB-D6 AB-D6 Z	APPLICATIONS: Gas, Sanitation, Electric									P. 251		
	Ø 12 - Ø 28	100	B YELLOW C2 / Z ZINC C1 AB-D6 AB-D6 Z	1	12	-	Embed M6	-	-	-	✓	-
AB-DZ 7	APPLICATIONS: Gas, Sanitation, Electric									P. 253		
	Ø 10 - Ø 28	70	Z ZINC C1	0,8 - 1	11	-	Embed M7	-	-		✓	-
AB-6I	APPLICATIONS: HSW and CW, Gas, Sanitation, Heating, Air Conditioning, Electric, Ventilation									P. 252		
	Ø 12 - Ø 60	70 - 100	B YELLOW C2	1 - 1,2	12	Fast lateral	Embed M6	-	✓	✓	-	-
AB-DI	APPLICATIONS: HSW and CW, Gas, Sanitation, Heating, Air Conditioning, Electric, Ventilation									P. 252		
	Ø 12 - Ø 60	100	B YELLOW C2	1	12	-	Embed M6	-	✓	✓	✓	-
AB-7I Z	APPLICATIONS: HSW and CW, Gas, Sanitation, Heating, Air Conditioning, Electric, Ventilation									P. 254		
	Ø 12 - Ø 50	70	Z ZINC C1	0,8 - 1	11	-	Embed M7	-	✓	✓		
AB-7ID Z	APPLICATIONS: HSW and CW, Gas, Sanitation, Heating, Air Conditioning, Electric, Ventilation									P. 254		
	Ø 10 - Ø 28	70	Z ZINC C1	0,8 - 1	11	-	Embed M7	-	✓	✓	✓	
AB-PI	APPLICATIONS: Sanitation, Electric									P. 255		
	Ø 6 - Ø 63	30	Z ZINC C1	1,1 - 1,3	12,5 - 19	-	-	-	-	-	-	-
AB-PU	APPLICATIONS: Sanitation, Electric									P. 255		
	Ø 16 - Ø 63	30	Z ZINC C1	1,2 - 1,4	12 - 20	-	-	-	-	-	-	-

	SIZES (mm)	RECOMMENDED LOAD kg	COATING	THICKNESS (mm)	WIDTH (mm)	OPENING	COUPLING NUT	ASSESSMENT	ISOPHONIC	CTE	PARALLEL ASSEMBLING	SCREW
AB-GM	APPLICATIONS: Gas									P. 260		
	Ø 12 - Ø 35	100	P YELLOW	1 - 1,2	12	Fast lateral	Embed M6	According to EN ISO 4892	-	-	-	Pre-assambled
AB-GS	APPLICATIONS: Gas									P. 261		
	Ø 10 - Ø 54	70 - 100	P BLACK	1 - 1,2	12	Fast lateral	Embed M6	According to EN ISO 4892	-	-	-	Pre-assambled
AB-GD	APPLICATIONS: Gas									P. 261		
	Ø 12 - Ø 28	100	P BLACK	1 - 1,2	12	-	Embed M6	According to EN ISO 4892	-	-	✓	Pre-assambled
AB-CR	APPLICATIONS: Sanitation									P. 259		
	Ø 10 - Ø 12	70	NiCr	1 - 1,2	12	Fast lateral	Embed M6	-	-	-	-	-
AB-ITS										P. 259		
	15 - 28	-	A2 INOX AISI 304	1,0 – 1,2	20 – 33	-	-	-	-	-	-	-
AB-ITD										P. 259		
	15 - 22	-	A2 INOX AISI 304	1,0	20 – 27	-	-	-	-	-	-	-
AB-BU	APPLICATIONS: Sanitation, Industrial									P. 260		
	Ø 13 - Ø 21	-	Z ZINC	0,6	9	-	-	-	-	-	-	Pre-assambled
AB-SF	APPLICATIONS: Sanitation, Industrial									P. 257		
	Ø 8 - Ø 150	-	Z ZINC	0,6 - 0,8	9	-	-	-	-	-	-	Pre-assambled
AB-IP	APPLICATIONS: HSW and CW, Gas, Sanitation, Heating, Air Conditioning, Electric, Ventilation									P. 256		
	-	-	Z ZINC	1,5	20	-	-	-	✓	✓	-	ABT006015
AB-SI	APPLICATIONS: HSW and CW, Gas, Sanitation, Heating, Air Conditioning, Electric, Ventilation									P. 256		
	3 / 25 Holes	-	Z ZINC	3	20	-	-	-	✓	✓	✓	ABT006015

AB-M6 Pipe clamp M6

AB-M6

Yellow zinc-plated



02 P. 396 Technical info.

LATERAL OPENING



PVC pipes Cooper tipe Steel pipe

CODE	SIZE	€/100	SIZE IN INCHES	ØD(MM)	MAXIMUN LOAD		
ABM6008	8 (M6)	**19,570**	-	8	70	100	1.200
ABM6010	10 (M6)	**20,263**	1/8"	10	70	100	1.200
ABM6012	12 (M6)	**20,020**	-	12	70	100	1.200
ABM6014	14 (M6)	**20,717**	1/4"	14	70	100	1.200
ABM6015	15 (M6)	**20,720**	-	15	70	100	600
ABM6016	16 (M6)	**21,307**	-	16	70	100	600
ABM6018	18 (M6)	**21,823**	3/8"	18	70	100	600
ABM6020	20 (M6)	**22,150**	-	20	70	100	600
ABM6022	22 (M6)	**23,153**	1/2"	22	70	100	600
ABM6025	25 (M6)	**24,320**	-	25	70	100	600
ABM6026	26 (M6)	**25,580**	3/4"	26	70	100	400
ABM6028	28 (M6)	**26,197**	-	28	70	100	400
ABM6032	32 (M6)	**29,010**	1"	32	70	50	300
ABM6035	35 (M6)	**32,607**	-	35	70	50	300
ABM6037	37 (M6)	**34,380**	-	37	100	50	300
ABM6040	40 (M6)	**37,340**	-	40	100	50	300
ABM6042	42 (M6)	**38,727**	1 1/4"	42	100	50	300
ABM6047	47 (M6)	**42,110**	1 1/2"	47	100	50	200
ABM6050	50 (M6)	**42,280**	-	50	100	50	150
ABM6054	54 (M6)	**49,160**	-	54	100	50	150
ABM6060	60 (M6)	**53,803**	2"	60	100	50	150
ABM6063	63 (M6)	**56,817**	-	63	100	50	100

Self-Service

CODE	SIZE	€/BAG	PCS.	BAGS
LSABM6012	12	**6,190**	20	5
LSABM6014	14	**6,309**	20	5
LSABM6016	16	**6,423**	20	5
LSABM6018	18	**5,361**	15	6
LSABM6022	22	**4,476**	10	6
LSABM6028	28	**3,266**	6	6
LSABM6032	32	**2,902**	4	6
LSABM6040	40	**3,330**	4	5

AB-M6 Z

Zinc-plated



02 P. 396 Technical info.

LATERAL OPENING



PVC pipes Cooper tipe Steel pipe

CODE	SIZE	€/100	SIZE IN INCHES	ØD(MM)	MAXIMUN LOAD		
ABMZ6008	8 (M6)	**19,570**	-	8	70	100	1.200
ABMZ6010	10 (M6)	**20,263**	1/8"	10	70	100	1.200
ABMZ6012	12 (M6)	**20,020**	-	12	70	100	1.200
ABMZ6014	14 (M6)	**20,717**	1/4"	14	70	100	1.200
ABMZ6015	15 (M6)	**21,107**	-	15	70	100	600
ABMZ6016	16 (M6)	**21,307**	-	16	70	100	600
ABMZ6018	18 (M6)	**21,823**	3/8"	18	70	100	600
ABMZ6020	20 (M6)	**22,150**	-	20	70	100	600
ABMZ6022	22 (M6)	**23,153**	1/2"	22	70	100	600
ABMZ6025	25 (M6)	**24,320**	-	25	70	100	600
ABMZ6026	26 (M6)	**25,580**	3/4"	26	70	100	400
ABMZ6028	28 (M6)	**26,197**	-	28	70	100	400
ABMZ6032	32 (M6)	**29,010**	1"	32	70	50	300
ABMZ6035	35 (M6)	**32,607**	-	35	70	50	300
ABMZ6037	37 (M6)	**35,027**	-	37	100	50	300
ABMZ6040	40 (M6)	**37,340**	-	40	100	50	300
ABMZ6042	42 (M6)	**38,727**	1 1/4"	42	100	50	300
ABMZ6047	47 (M6)	**42,110**	1 1/2"	47	100	50	200
ABMZ6050	50 (M6)	**42,280**	-	50	100	50	150
ABMZ6054	54 (M6)	**49,160**	-	54	100	50	150
ABMZ6060	60 (M6)	**53,803**	2"	60	100	50	150
ABMZ6063	63 (M6)	**56,817**	-	63	100	50	100

Pipe clamp M6 AB-M6

STAINLESS STEEL

Satinless steel pipe | PVC pipes | A2 INOX

CODE	SIZE	€/100	SIZE IN INCHES	ØD(MM)	MAXIMUN LOAD		
ABM6A2012	12 (M6)	**198,680**	1/4"	12	70	100	1.200
ABM6A2015	15 (M6)	**202,270**	-	14 - 15	70	100	600
ABM6A2018	18 (M6)	**205,860**	3 / 8"	16 - 18	70	100	600
ABM6A2020	20 (M6)	**209,980**	1 / 2"	19 - 21	70	100	600
ABM6A2022	22 (M6)	**212,633**	-	22 -24	70	100	600
ABM6A2028	28 (M6)	**224,573**	3/4"	25 - 30	70	100	400

AB-M6 A2

A2 Stainless steel



02 P. 397 Technical info.

Double pipe clamp M6 AB-D6

PVC pipes | Cooper tipe | Steel pipe | B YELLOW

CODE	SIZE	€/100	SIZE IN INCHES	ØD(MM)	MAXIMUN LOAD		
ABD6012	12 (M6)	**31,177**	-	12	100	50	600
ABD6015	15 (M6)	**33,967**	-	15	100	50	300
ABD6018	18 (M6)	**37,313**	3/8"	18	100	50	300
ABD6022	22 (M6)	**42,313**	1/2"	22	100	50	300
ABD6028	28 (M6)	**49,600**	-	28	100	50	200

Self-Service

CODE	SIZE	€/BAG	PCS.	BAGS
LSABD6012	12	**3,404**	5	6
LSABD6015	15	**3,515**	5	6
LSABD6018	18	**3,616**	5	6
LSABD6022	22	**3,515**	4	6
LSABD6028	28	**4,321**	4	6

AB-D6

Yellow zinc-plated



02 P. 397 Technical info.



PVC pipes | Cooper tipe | Steel pipe | Z ZINC

CODE	SIZE	€/100	SIZE IN INCHES	ØD(MM)	MAXIMUN LOAD		
ABDZ6012	12 (M6)	**31,177**	-	12	100	50	600
ABDZ6015	15 (M6)	**33,967**	-	15	100	50	300
ABDZ6018	18 (M6)	**37,313**	3/8"	18	100	50	300
ABDZ6022	22 (M6)	**42,313**	1/2"	22	100	50	300
ABDZ6028	28 (M6)	**49,600**	-	28	100	50	200

AB-D6 Z

Zinc-plated



02 P. 397 Technical info.

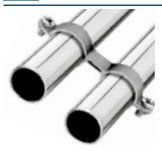

APPLICATION EXAMPLES











AB-6I

Isophonic pipe clamp M6



02 P. 398 Technical info.

CTE CÓDIGO TÉCNICO DE LA EDIFICACIÓN

LATERAL OPENING



PVC pipes · Cooper tipe · Steel pipe · B YELLOW

CODE	SIZE	€/100	SIZE IN INCHES	ØD(MM)	MAXIMUN LOAD		
AB6I012	12 (M6)	**30,567**	1/8"	12	70	100	600
AB6I015	15 (M6)	**31,420**	1/4"	15	70	100	600
AB6I016	16 (M6)	**32,813**	-	16	70	100	600
AB6I018	18 (M6)	**33,100**	3/8"	18	70	100	600
AB6I022	22 (M6)	**37,663**	1/2"	22	70	100	400
AB6I026	26 (M6)	**42,690**	-	26	70	100	400
AB6I028	28 (M6)	**44,413**	3/4"	28	70	100	300
AB6I032	32 (M6)	**46,503**	-	32	70	50	200
AB6I035	35 (M6)	**52,437**	1"	35	70	50	200
AB6I042	42 (M6)	**64,830**	1 1/4"	42	100	50	150
AB6I048	48 (M6)	**73,393**	1 1/2"	48	100	50	100
AB6I054	54 (M6)	**86,683**	-	54	100	50	100
AB6I060	60 (M6)	**92,080**	2"	60	100	50	100

Self-Service

CODE	SIZE	€/BAG	PCS.	BAGS
LSAB6I012	12	**5,038**	10	6
LSAB6I015	15	**5,297**	10	5
LSAB6I016	16	**5,327**	10	6
LSAB6I018	18	**4,314**	8	6
LSAB6I022	22	**3,936**	6	6
LSAB6I028	28	**3,448**	4	6

AB-DI

Double isophonic pipe clamp M6



02 P. 398 Technical info.

CTE CÓDIGO TÉCNICO DE LA EDIFICACIÓN



PVC pipes · Cooper tipe · Steel pipe · B YELLOW

CODE	SIZE	€/100	SIZE IN INCHES	ØD(MM)	MAXIMUN LOAD		
ABDI0012	12 (M6)	**54,810**	1/8"	12	100	50	300
ABDI0015	15 (M6)	**65,373**	1/4"	15	100	50	300
ABDI0018	18 (M6)	**71,337**	3/8"	18	100	50	200
ABDI0022	22 (M6)	**82,167**	1/2"	22	100	50	200
ABDI0028	28 (M6)	**107,233**	3/4"	28	100	50	150

Self-Service

CODE	SIZE	€/BAG	PCS.	BAGS
LSABDI0012	12	**3,970**	5	6
LSABDI0015	15	**4,194**	5	6
LSABDI0018	18	**3,414**	3	6
LSABDI0022	22	**3,565**	3	6

Pipe clamp M7. Zinc plated. AB-M7 Z

PVC pipes | Cooper tipe | Steel pipe | ZINC



02 P. 399 Technical info.

M7

CODE	SIZE	€/100	ØD(MM)		
ABMZ7008	8	**19,570**	8	100	1.200
ABMZ7010	10	**20,263**	10	100	1.200
ABMZ7012	12	**20,020**	12	100	1.200
ABMZ7014	14	**20,717**	14	100	1.200
ABMZ7016	16	**21,307**	16	100	1.200
ABMZ7018	18	**21,823**	18	100	1.200
ABMZ7020	20	**22,150**	20	100	1.200
ABMZ7022	22	**23,153**	22	100	600
ABMZ7024	24	**23,627**	24	100	600
ABMZ7025	25	**24,320**	25	100	600
ABMZ7026	26	**25,580**	26	100	600
ABMZ7028	28	**26,197**	28	100	600
ABMZ7032	32	**29,010**	32	50	600
ABMZ7034	34	**32,260**	34	50	300
ABMZ7036	36	**34,380**	36	50	300
ABMZ7038	38	**34,323**	38	50	300
ABMZ7040	40	**37,340**	40	50	300
ABMZ7050	50	**42,280**	50	50	200
ABMZ7063	63	**56,817**	63	25	150

Double pipe clamp M7. Zinc plated. AB-D7 Z

PVC pipes | Cooper tipe | Steel pipe | ZINC



02 P. 399 Technical info.

M7

CODE	SIZE	€/100	ØD(MM)		
ABDZ70810	8-10	**31,750**	8-10	50	600
ABDZ71012	10-12	**31,177**	10-12	50	600
ABDZ71214	12-14	**34,647**	12-14	50	600
ABDZ71416	14-16	**33,967**	14-16	50	600
ABDZ71618	16-18	**37,313**	16-18	50	600
ABDZ71820	18-20	**42,313**	18-20	50	300
ABDZ72022	20-22	**49,600**	20-22	50	300
ABDZ72224	22-24	**51,220**	22-24	50	300
ABDZ72628	26-28	**53,823**	26-28	50	300

AB-7I Z

Isophonic pipe clamp M7. Zinc plated.



02 P. 400 Technical info.

M7

PVC pipes | Cooper tipe | Steel pipe | ZINC

CODE	SIZE	€/100	ØD(MM)		
AB7IZ010	10	**29,130**	10	100	1.200
AB7IZ012	12	**30,567**	12	100	1.200
AB7IZ014	14	**31,420**	14	100	1.200
AB7IZ016	16	**32,813**	16	100	1.200
AB7IZ018	18	**33,100**	18	100	600
AB7IZ020	20	**35,713**	20	100	600
AB7IZ022	22	**37,663**	22	100	600
AB7IZ024	24	**38,880**	24	100	600
AB7IZ026	26	**42,690**	26	100	600
AB7IZ028	28	**44,413**	28	100	400
AB7IZ032	32	**46,503**	32	50	300
AB7IZ034	34	**50,100**	34	50	300
AB7IZ036	36	**52,437**	36	50	300
AB7IZ038	38	**52,730**	38	50	300
AB7IZ040	40	**58,563**	40	50	300
AB7IZ050	50	**61,060**	50	50	200

AB-7ID Z

Double isophonic pipe clamp M7. Zinc plated.



02 P. 400 Technical info.

M7

PVC pipes | Cooper tipe | Steel pipe | ZINC

CODE	SIZE	€/100	ØD(MM)		
AB7IDZ0810	08-10	**51,247**	08-10	50	600
AB7IDZ1012	10-12	**54,810**	10-12	50	600
AB7IDZ1214	12-14	**56,560**	12-14	50	600
AB7IDZ1416	14-16	**65,373**	14-16	50	300
AB7IDZ1618	16-18	**71,337**	16-18	50	300
AB7IDZ1820	18-20	**72,320**	18-20	50	300
AB7IDZ2022	20-22	**82,167**	20-22	50	300
AB7IDZ2224	22-24	**86,990**	22-24	50	200
AB7IDZ2628	26-28	**107,233**	26-28	50	200

AB-PI

Conduit clip with single hole

Flexible pipe | PVC pipes | Cooper tipe | Steel pipe | ZINC

CODE	SIZE	€/100	SIZE IN INCHES	ØD(MM)	MAXIMUN LOAD		
ABPI006	6	**6,293**	-	6	30	100	2.400
ABPI008	8	**6,730**	-	8	30	100	2.400
ABPI010	10	**7,477**	1/8"	10	30	100	2.400
ABPI012	12	**7,890**	1/4"	12	30	100	2.400
ABPI014	14	**9,907**	-	14	30	100	2.400
ABPI016	16	**12,123**	3/8"	16	30	100	1.200
ABPI018	18	**13,160**	-	18	30	100	1.200
ABPI020	20	**15,640**	1/2"	20	30	100	1.200
ABPI022	22	**17,097**	-	22	30	100	600
ABPI025	25	**19,067**	-	25	30	100	600
ABPI026	26	**19,723**	3/4"	26	30	100	600
ABPI028	28	**20,710**	-	28	30	100	600
ABPI032	32	**28,290**	1"	32	30	100	600
ABPI040	40	**38,780**	-	40	30	50	300
ABPI042	42	**45,723**	1 1/4"	42	30	50	300
ABPI047	47	**47,650**	1 1/2"	47	30	50	200
ABPI050	50	**49,287**	-	50	30	50	200
ABPI063	63	**73,883**	2"	63	30	50	200



02 P. 401 Technical info.



APPLICATION EXAMPLES





Blister

CODE	SIZE	€/BAG	PCS.	BAGS
BZABPI016	16	**2,029**	2	15
BZABPI018	18	**2,029**	2	12
BZABPI020	20	**2,029**	2	10
BZABPI022	22	**2,029**	2	10
BZABPI025	25	**2,029**	2	10
BZABPI028	28	**2,029**	2	10
BZABPI032	32	**2,029**	2	10

Self-Service

CODE	SIZE	€/BAG	PCS.	BAGS
LSABPI016	16	**4,658**	20	5
LSABPI018	18	**4,789**	20	5
LSABPI020	20	**4,977**	20	5
LSABPI022	22	**5,449**	20	5
LSABPI025	25	**4,985**	15	5
LSABPI028	28	**4,214**	10	6
LSABPI032	32	**3,491**	6	6
LSABPI040	40	**3,310**	4	6

AB-PU

Bridge conduit clip with double hole

Flexible pipe | PVC pipes | Cooper tipe | Steel pipe | ZINC

CODE	SIZE	€/100	SIZE IN INCHES	ØD(MM)	MAXIMUN LOAD		
ABPU016	16	**15,267**	3/8"	16	75	100	1.200
ABPU018	18	**15,993**	-	18	75	100	1.200
ABPU020	20	**16,173**	1/2"	20	75	100	600
ABPU022	22	**19,520**	-	22	75	100	600
ABPU025	25	**20,573**	-	25	75	100	600
ABPU028	28	**22,223**	-	28	75	100	600
ABPU032	32	**25,153**	1"	32	75	50	300
ABPU037	37	**30,093**	-	37	75	50	300
ABPU040	40	**35,243**	-	40	75	50	300
ABPU050	50	**45,920**	-	50	75	50	200
ABPU063	63	**62,260**	2"	63	75	50	150



02 P. 401 Technical info.



APPLICATION EXAMPLES





Self-Service

CODE	SIZE	€/BAG	PCS.	BAGS
LSABPU016	16	**5,072**	20	5
LSABPU018	18	**5,362**	20	5
LSABPU020	20	**5,451**	20	5
LSABPU022	22	**6,173**	20	5
LSABPU025	25	**5,420**	15	5
LSABPU028	28	**4,510**	10	6
LSABPU032	32	**3,321**	6	6
LSABPU037	37	**2,981**	4	6
LSABPU040	40	**3,023**	4	6
LSABPU050	50	**3,405**	4	6
LSABPU063	63	**3,703**	4	6

AB-IP

Isophonic bridge conduit clip



02 P. 402 Technical info.

CTE CÓDIGO TÉCNICO DE LA EDIFICACIÓN

PVC pipes · Cooper tipe · Steel pipe · ZINC

CODE	SIZE	€/100	SIZE IN INCHES	ØD(MM)	HOLE NUM		
ABIP015	15	**59,943**	-	15	3	50	600
ABIP018	18	**66,050**	3/8"	18	3	50	300
ABIP022	22	**72,473**	1/2"	22	3	50	300
ABIP026	26	**84,703**	3/4"	26	4	50	300
ABIP028	28	**90,553**	-	28	4	50	300
ABIP035	35	**102,987**	1"	35	4	50	150
ABIP042	42	**112,023**	1 1/4"	42	4	25	100
ABIP048	48	**121,063**	1 1/2"	48	4	25	100
ABIP054	54	**134,667**	-	54	5	25	100
ABIP060	60	**151,663**	2"	60	5	25	75
ABIP067	67	**168,673**	-	67	5	25	75
ABIP075	75	**179,943**	2 1/2"	75	6	25	75
ABIP090	90	**212,657**	3"	90	6	25	75

AB-SI

Fixing plate for Isophonic bridge conduit clip

AB-SI

Fixing plate for Isophonic bridge conduit clip



02 P. 402 Technical info.

CTE CÓDIGO TÉCNICO DE LA EDIFICACIÓN



PVC pipes · Cooper tipe · Steel pipe · ZINC

CODE	SIZE	€/100	METRIC DRILL	HOLE NUM	
ABSI003	3	**203,633**	M6	25	-
ABSI004	4	**237,047**	M6	25	-
ABSI005	5	**272,483**	M6	25	150
ABSI006	6	**306,817**	M6	25	-
ABSI007	7	**343,273**	M6	25	-
ABSI008	8	**376,910**	M6	25	-
ABSI009	9	**410,773**	M6	25	-
ABSI010	10	**430,530**	M6	25	-
ABSI011	11	**470,753**	M6	25	-
ABSI012	12	**505,973**	M6	25	-
ABSI013	13	**538,987**	M6	25	-
ABSI014	14	**566,570**	M6	25	-
ABSI015	15	**602,243**	M6	25	-
ABSI016	16	**636,150**	M6	10	-
ABSI017	17	**684,683**	M6	10	-
ABSI018	18	**743,453**	M6	10	-
ABSI019	19	**752,150**	M6	10	-
ABSI020	20	**810,883**	M6	10	-
ABSI021	21	**819,500**	M6	10	-
ABSI022	22	**854,737**	M6	10	-
ABSI025	25	**1.008,880**	M6	10	-

AB-TO

Screw for AB-IP



PVC pipes · Cooper tipe · Steel pipe · ZINC

CODE	SIZE	€/100	
ABT006015	M6 x 15	**9,090**	100

APPLICATION EXAMPLES











Hose clamp AB-SF

Flexible pipe | PVC pipes | Cooper tipe | Steel pipe | ZINC

CODE	SIZE	€/100	SIZE IN INCHES	ØD(MM)		
ASF008016	8-16	**31,963**	5/16"- 5/8"	8-16	100	1.200
ASF012022	12-22	**32,983**	1/2"- 7/8"	12-22	100	600
ASF016027	16-27	**34,727**	5/8"- 1 1/16"	16 - 27	100	600
ASF020032	20-32	**38,940**	3/4"- 1 1/4"	20 - 32	100	600
ASF025040	25-40	**45,430**	1"- 1 5/8"	25 - 40	100	400
ASF030045	30-45	**50,717**	1 3/16"- 1 3/4"	30 - 45	100	300
ASF035050	35-50	**51,013**	1 3/8"- 2"	35 - 50	100	200
ASF040060	40-60	**59,080**	1 5/8"- 2 3/8"	40 - 60	100	200
ASF050070	50-70	**65,503**	2"- 2 3/4"	50 - 70	50	100
ASF060080	60-80	**68,673**	2 3/8"- 3 1/8"	60 - 80	50	100
ASF070090	70-90	**75,717**	2 3/4"- 3 1/2"	70 - 90	50	-
ASF080100	80-100	**81,763**	3 1/8"- 4"	80 - 100	50	-
ASF090110	90-110	**90,667**	3 1/2"- 4 3/8"	90 - 110	50	-
ASF100120	100-120	**99,507**	4"- 4 3/4"	100 - 120	25	-
ASF110130	110-130	**102,357**	4 3/8"- 5 1/8"	110 - 130	25	-
ASF120140	120-140	**108,950**	4 3/4"- 5 1/2"	120 - 140	25	-
ASF130150	130-150	**112,707**	5 1/8"- 5 7/8"	130 - 150	25	-

Blister

CODE	SIZE	€/BAG	PCS.	BAGS
BZASF008016	8-16	**2,565**	2	20
BZASF012022	12-22	**2,565**	2	20
BZASF016027	16-27	**2,565**	2	20
BZASF020032	20-32	**2,565**	2	10
BZASF025040	25-40	**2,565**	2	10

Self-Service

CODE	SIZE	€/BAG	PCS.	BAGS
LSASF008016	8-16	**7,246**	15	7
LSASF012022	12-22	**6,336**	12	7
LSASF016027	16-27	**6,493**	12	7
LSASF020032	20-32	**6,171**	10	7
LSASF025040	25-40	**4,300**	6	7
LSASF030045	30-45	**4,742**	6	7
LSASF035050	35-50	**4,783**	6	7
LSASF040060	40-60	**3,925**	4	7
LSASF050070	50-70	**4,195**	4	7

AB-SF

Zinc-plated



02 P. 403 Technical info.

Embossed washer



For several Ø



APPLICATION EXAMPLES





STAINLESS STEEL

Flexible pipe | PVC pipes | Cooper tipe | Steel pipe | A2 INOX

CODE	SIZE	€/100	SIZE IN INCHES		
ASF2010016	10-16	**91,983**	-	100	1.200
ASF2012020	12-20	**94,273**	1/2"- 7/8"	100	600
ASF2016027	16-27	**98,337**	5/8"- 1 1/16"	100	600
ASF2020032	20-32	**110,910**	3/4"- 1 1/4"	100	600
ASF2025040	25-40	**121,187**	1"- 1 5/8"	100	200
ASF2032050	32-50	**168,677**	1 3/8"- 2"	100	300
ASF2040060	40-60	**179,097**	1 5/8"- 2 3/8"	100	200
ASF2050070	50-70	**186,910**	2"- 2 3/4"	50	100
ASF2060080	60-80	**196,483**	2 3/8"- 3 1/8"	50	100
ASF2070090	70-90	**206,930**	2 3/4"- 3 1/2"	50	100
ASF2080100	80-100	**213,867**	3 1/8"- 4"	50	100
ASF2090110	90-110	**249,403**	3 1/2"- 4 3/8"	50	50
ASF2100120	100-120	**259,197**	4"- 4 3/4"	25	25
ASF2110130	110-130	**268,960**	4 3/8"- 5 1/8"	25	25
ASF2120140	120-140	**282,660**	4 3/4"- 5 1/2"	25	25
ASF2130150	130-150	**293,423**	5 1/8"- 5 7/8"	25	25

AB-SF A2

A2 Stainless steel



02 P. 403 Technical info.

Embossed washer



For several Ø



APPLICATION EXAMPLES





AB-SF IR

Abrazadera sin fin inoxidable en rollo

AB-SF IR

Kit (Roll 3 m. + 8 heads). Stainless steel



Flexible pipe · PVC pipes · Cooper tipe · Steel pipe · INOX AISI 430

CODE	SIZE	€/PC		
ASFIR03	9 x 0,6 mm/ 3 m	**1.429,560**	1	50

AB-SF IRC

Head. Stainless steel



Flexible pipe · PVC pipes · Cooper tipe · Steel pipe · INOX AISI 430

CODE	SIZE	€/100		
ASFIRCA	Cabezal	**102,113**	50	1.000

AB-SF IRR

Roll 30 m. Stainless steel



Flexible pipe · PVC pipes · Cooper tipe · Steel pipe · INOX AISI 430

CODE	SIZE	€/PC		
ASFIR30	9 x 0,6 mm/ 30 m	**5.105,580**	1	10

CI-PE

Fixing band

CI-PE

Round fixing band ATLANTIS C2-M



02 P. 403 Technical info.

PVC pipes · Cooper tipe · Steel pipe · Aerated concrete · Concrete · ATLANTIS

CODE	SIZE	€/PC	MIN. ORDER QTY.		
CIPE1208	12 x 0,8 x 10 m	**8,370**	10	1	40
CIPE1708	17 x 0,8 x 10 m	**11,261**	10	1	30





CI-PE A2

Round fixing band. A2 Stainless steel



02 P. 403 Technical info.

STAINLESS STEEL

PVC pipes · Cooper tipe · Steel pipe · Aerated concrete · Concrete · A2 INOX AISI 316

CODE	SIZE	€/PC	MIN. ORDER QTY.		
CIPEA21708	17 x 0,8 x 10 m	**40,304**	1	1	30



Straight fixing band ATLANTIS C2-M — CI-PR

PVC pipes | Cooper tipe | Steel pipe | Aerated concrete | Concrete

CODE	SIZE	€/PC	MIN. ORDER QTY.		
CIPR1908	19 x 0,8 x 10 m	**12,647**	5	1	30
CIPR1208	12 x 0,8 x 10 m	**9,109**	5	1	40







02 P. 390 Technical info.

Chromed pipe clamp M6 — AB-CR

Cooper tipe | Steel pipe

CODE	SIZE	€/100	SIZE IN INCHES	MAXIMUN LOAD		
ABCR010	10 (M6)	**34,563**	1/8"	70	100	1.200
ABCR012	12 (M6)	**36,417**	1/4"	70	100	1.200



02 P. 404 Technical info.

APPLICATION EXAMPLES







Stainless steel clamp Indextube — AB-IT

SANITATION

AB-ITS NEW

Simple

CODE	SIZE	€/100		
ABITS015	Ø15	**122,600**	100	600
ABITS018	Ø18	**132,847**	100	400
ABITS022	Ø22	**196,913**	100	400
ABITS028	Ø28	**264,693**	100	300



SANITATION

AB-ITD NEW

Double

CODE	SIZE	€/100		
ABITD015	Ø15	**453,273**	50	300
ABITD018	Ø18	**513,180**	50	200
ABITD022	Ø22	**201,960**	50	100



AB-BU

Butane clamp



02. Technical info. P. 404

Butane pipe

ZINC

CODE	SIZE	€/100	SIZE IN INCHES		
ABBU1315	13 - 15	**34,077**	1/2" - 9/16"	50	600
ABBU1618	16 - 18	**34,077**	5/8" - 11/16"	50	600
ABBU1921	19 - 21	**46,322**	3/4" - 13/16"	50	600

APPLICATION EXAMPLES





AB-GM

Pipe clamp for gas yellow coated with chipboard screw



02. Technical info. P. 405

LATERAL OPENING





Assembled Chipboard screw

According to **UNE-EN ISO 4892**

Gas pipe PVC pipes Cooper tipe Steel pipe

YELLOW

CODE	SIZE	€/100	SIZE IN INCHES	ØD(MM)	MAXIMUN LOAD		
ABGM012	12 (M6)	**37,060**	1/4"	12	70	100	600
ABGM015	15 (M6)	**39,316**	-	15	70	100	600
ABGM018	18 (M6)	**40,391**	3/8"	18	70	100	600
ABGM022	22 (M6)	**42,653**	1/2"	22	70	50	200
ABGM028	28 (M6)	**45,039**	3/4"	28	70	50	200
ABGM035	35 (M6)	**54,260**	-	35	70	50	200

APPLICATION EXAMPLES

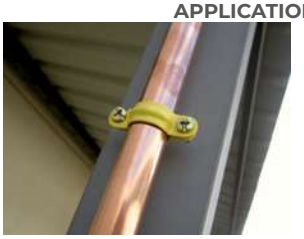



Pipe clamp for gas black coated M6 with chipboard screw

AB-GS

Gas pipe · PVC pipes · Cooper tipe · Steel pipe

CODE	SIZE	€/100	SIZE IN INCHES	ØD(MM)	MAXIMUN LOAD		
ABGS010	10 (M6)	**36,347**	1/8"	10	70	100	600
ABGS012	12 (M6)	**36,990**	1/4"	12	70	100	600
ABGS015	15 (M6)	**37,810**	-	15	70	100	600
ABGS018	18 (M6)	**38,860**	3/8"	18	70	100	600
ABGS022	22 (M6)	**42,617**	1/2"	22	70	50	200
ABGS028	28 (M6)	**44,990**	3/4"	28	70	50	200
ABGS035	35 (M6)	**52,167**	-	35	70	50	200
ABGS042	42 (M6)	**57,550**	1 1/4"	42	100	25	100
ABGS054	54 (M6)	**77,587**	-	54	100	25	100



02 P. 405 Technical info.

LATERAL OPENING





Assembled Chipboard screw

According to **UNE-EN ISO 4892**

Self-Service

CODE	SIZE	€/BAG	PCS.	BAGS
LSABGS015	15	**6,465**	10	6
LSABGS018	18	**5,341**	8	6
LSABGS022	22	**4,854**	6	6

Double pipe clamp for gas black coated M6 with chipboard screw

AB-GD

Gas pipe · PVC pipes · Cooper tipe · Steel pipe

CODE	SIZE	€/100	SIZE IN INCHES	ØD(MM)	MAXIMUN LOAD		
ABGD012	12 (M6)	**50,317**	-	12	100	50	300
ABGD015	15 (M6)	**54,327**	-	15	100	50	300
ABGD018	18 (M6)	**55,820**	3/8"	18	100	50	300
ABGD022	22 (M6)	**60,913**	1/2"	22	100	50	200
ABGD028	28 (M6)	**82,477**	-	28	100	50	200



02 P. 405 Technical info.





Assembled Chipboard screw

According to **UNE-EN ISO 4892**

APPLICATION EXAMPLES













FIRE PROTECTION SYSTEMS

AB-PE

Sprinkler pipe clamp



02 P. 406 Technical info.

FM APPROVED



Fire figthing pipes | Steel pipe | ZINC

CODE	SIZE	€/100	SIZE IN INCHES	MAXIMUN LOAD		
ABPE028	28 (M10)	**97,553**	3/4"	154	50	200
ABPE035	35 (M10)	**102,313**	1"	186	50	200
ABPE040	40 (M10)	**119,767**	1 1/4"	195	50	200
ABPE048	48 (M10)	**120,427**	1 1/2"	236	50	200
ABPE060	60 (M10)	**136,417**	2"	288	50	200
ABPE075	75 (M10)	**157,753**	2 1/2"	426	25	100
ABPE090	90 (M10)	**177,657**	3"	481	25	100
ABPE100	100 (M10)	**218,937**	3 1/2"	569	25	100
ABPE115	115 (M10)	**296,180**	4"	669	25	100
ABPE140	140 (M12)	**527,704**	5"	907	10	40
ABPE160	160 (M12)	**616,561**	6"	1.186	10	40
ABPE220	220 (M12)	**1.078,984**	8"	1.723	10	40

APPLICATION EXAMPLES





AB-CH

Clevis hanger clamp



02 P. 406 Technical info.

UL | FM APPROVED

Fire figthing pipes | Steel pipe | ZINC

CODE	ASSESSMENT	SIZE	€/100	ØD(MM)	
ABCH00034	UL	3/4"	**296,283**	28	50
ABCH01000	UL	1"	**312,697**	35	50
ABCH01014	UL	1 1/4"	**314,647**	42	50
ABCH01012	UL	1 1/2"	**339,727**	48	50
ABCH02000	UL	2"	**347,883**	60	50
ABCH02012	UL & FM	2 1/2"	**633,767**	75	30
ABCH03000	UL & FM	3"	**653,843**	90	25
ABCH04000	UL & FM	4"	**1.200,317**	115	25
ABCH05000	UL & FM	5"	**1.665,253**	140	25
ABCH06000	UL & FM	6"	**2.356,850**	160	10
ABCH08000	UL	8"	**3.532,940**	220	10
ABCH10000	UL	10"	**6.025,677**	275	1
ABCH12000	UL	12"	**7.998,550**	325	1
ABCH14000	-	14"	**10.330,123**	355	1
ABCH16000	-	16"	**14.837,133**	405	1

Fire-rated collar for multiple diameters

AB-CI

Fire figthing pipes | Steel pipe | ZINC

CODE	SIZE	€/PC	
ABCIKIT25	2,5 m x 50 mm	**484,512**	1
ABCIKIT30 *NEW*	3 m x 50 mm	**572,727**	1





CE | ETA

Ceiling wedge anchor ETA Assessed

AN-CU

SOLID | Cracked concrete | Stone | Aerated concrete | Concrete | kg. | ZINC

CODE	SIZE	€/100	DRILL Ø		
ANCU06040	6 x 40 Ø6	**28,713**	6	100	1.200
ANCU06070	6 x 70 Ø6	**45,007**	6	100	1.200



CE NON STRUCTURAL FIXINGS ETA 17/0987 | FIRE RESISTANCE

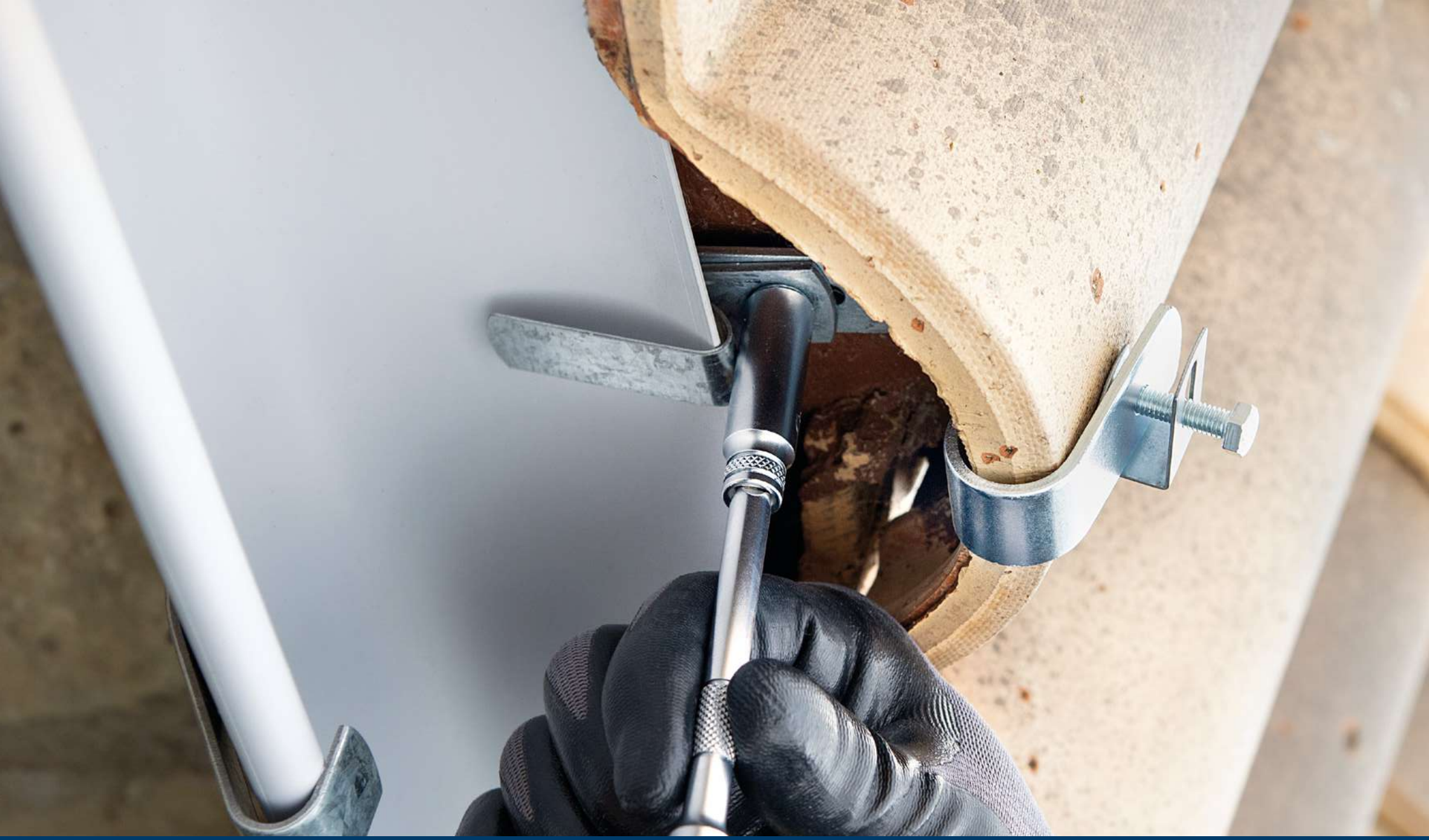

GUTTER SUPPORTS

TE Gutter supports

TE-MO

Module for PVC channel



METAL

CODE	D (MM)	A (MM)	€/100	
TEMO25	100	60	**255,990**	50
TEMO33	150	80	**315,510**	50

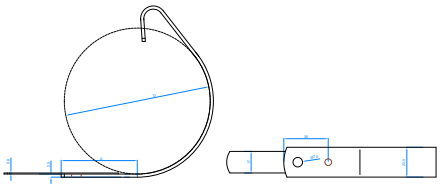

TE-GA

Hook for PVC channel



METAL

CODE	D (MM)	€/100	
TEGA25	100	**385,920**	50
TEGA33	150	**403,197**	50

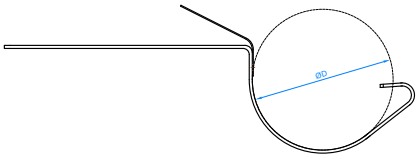

TE-GR

Big tile plate



METAL

CODE	A (MM)	B (MM)	L (MM)	€/100	
TEGR2530	35	50	80	**250,030**	50

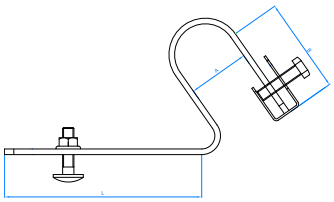

TE-PE

Tile plate



METAL

CODE	A (MM)	B (MM)	L (MM)	€/100	
TEPE2530	22	50	100	**233,480**	50

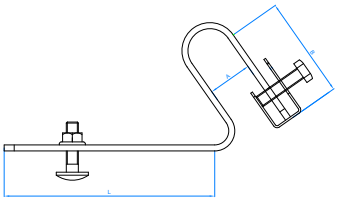

APPLICATION EXAMPLES









PLASTIC CLAMPS

BN

Nylon® cable ties and their accessories are some of the most highly demanded products in the professional installation world. They are suitable for all types of applications, such as electrical installations, landscaping, industrial cabling, construction, DIY, production lines and photovoltaic installations. The INDEX cable tie range is made up of a wide variety of colours and sizes, detectable cable ties and various accessories. We have UNE-EN 62275 certification (CE mark) and UL approval.



QUALITIES AND ADVANTAGES



FAST AND SIMPLE INSTALLATION

The ergonomic design of the flexible tape makes for smooth and easy threading.



HIGH PERFORMANCE

The design of the head ensures high resistance to traction, guaranteeing strong tensioning. Up to 122.3 kg* of breaking load under EN 50146

*For cable ties that are 12 mm wide.



INNER GEAR RACK

The design of the inner gear rack ensures an optimal tightening of the cable tie without damaging the object being secured.

MAXIMUM QUALITY AND GUARANTEES

The quality of INDEX cable ties is guaranteed with the highest quality standards, thanks to their certification under the UNE-EN 62275 standard, which has UL approval and allows for CE marking.

APPLICATIONS



- Wiring in general: Electrical wiring, hose clamping, cable hose bundling
- Solar Plants
- Automotive and Aeronautics
- Product Packaging
- Children's parks
- Pharmaceutical and Food Industry
- DIY and Gardening
- Arts and Crafts
- Facilities with HACCP/APPCC requirements (disposable cable ties)

RANGE





BLACK AND WHITE CABLE TIES

The black and white Nylon® cable ties with inner gear rack are very versatile, and can be used for numerous applications in multiple industries. They are available in a wide variety of sizes, enabling an optimal fastening of any element, such as cable harnesses, pipes and/or hoses.

The black cable ties, manufactured from polyamide with a black additive, provide greater resistance to ultraviolet radiation, making them suitable for outdoor applications. The white cable ties (natural) are suitable for indoor applications.

They are ideally suited for use in installations requiring high resistance to alkalis, oils, greases, oil by-products or chlorinated solvents. However, they offer limited resistance to acids and no resistance to phenols.



COLOURED CABLE TIES

The coloured cable ties are suitable for wiring in connection boxes where different bundles of cables are grouped, allowing them to be identified quickly and easily and making it possible to visually organize the work space.
They are also used in those applications where cable ties need to go unnoticed (fencing).

Available in a wide range of sizes in **brown, yellow, blue, red, green and grey**.





DETECTABLE CABLE TIES

Detectable cable ties are especially designed for use in the food, cosmetics and pharmaceutical industries, and in any others with applications that must **comply with the requirements of the HACCP* methodology** (Hazard Analysis and Critical Control Points).

Manufactured in 6.6 Polyamide with metal particles, their **magnetic properties allow them to be detected by a metal detector** or X-ray inspection equipment. And their unique blue colour makes them easy to detect visually.

PACKAGING AND POINT OF SALE



The bag the cable ties are sold in contains all the necessary information in a single glance.

Printed on the label are the dimensions of the cable tie, the usage temperature, the maximum and minimum diameter size, the breaking load, code and EAN.
It is a high quality plastic bag that ensures watertightness to maintain the recommended humidity level.

There are three shelving display options for cable ties:



BAGS HUNG ON HOOKS



BAGS ARRANGED IN TRAYS



BAGS IN DISPLAY BOXES

RECOMMENDATIONS ON THE USE AND STORAGE OF THE CABLE TIES

INDEX cable ties are manufactured in high quality polyamide, a hygroscopic plastic material, which means that the material absorbs and loses water depending on the external conditions (humidity and temperature). To guarantee correct handling and optimal conservation of the polyamide, the bags of cable ties contain the proper level of humidity.

We recommend the following to ensure correct product behaviour:



Do not open the bag until using them, and once open use them as soon as possible or store them in hermetic plastic bags.



Do not store near heat sources.



Optimal storage conditions: 23°C temperature and 50% relative humidity.



Do not expose to direct sunlight.

INDEX
A PERFECT FIXING

Nylon cable tie. Black

BN-N

MULTI-MATERIAL

Cable | Flexible pipe | PVC pipes | Cooper tipe | Steel pipe



CODE	SIZE	€/100			
BN25080	2,5 x 80	**1,557**	100	1.000	60.000
BN25100	2,5 x 100	**1,780**	100	1.000	50.000
BN25140	2,5 x 140	**2,637**	100	1.000	50.000
BN25160	2,5 x 160	**2,927**	100	1.000	50.000
BN25200	2,5 x 200	**3,810**	100	1.000	35.000
BN36140	3,6 x 140	**3,643**	100	1.000	30.000
BN36200	3,6 x 200	**4,960**	100	1.000	25.000
BN36250	3,6 x 250	**6,733**	100	1.000	12.000
BN36300	3,6 x 300	**8,063**	100	1.000	12.000
BN36370	3,6 x 370	**10,927**	100	1.000	12.000
BN48120	4,8 x 120	**5,313**	100	1.000	23.000
BN48160	4,8 x 160	**5,910**	100	1.000	23.000
BN48180	4,8 x 180	**6,303**	100	1.000	16.000
BN48200	4,8 x 200	**6,447**	100	1.000	16.000
BN48250	4,8 x 250	**9,310**	100	1.000	12.000
BN48290	4,8 x 290	**10,083**	100	1.000	11.000
BN48370	4,8 x 370	**12,997**	100	1.000	8.000
BN48430	4,8 x 430	**18,397**	100	1.000	8.000
BN76150	7,6 x 150	**14,313**	100	1.000	12.000
BN76200	7,6 x 200	**15,333**	100	1.000	9.000
BN76290	7,6 x 290	**19,303**	100	1.000	5.000
BN76370	7,6 x 370	**25,060**	100	1.000	5.000
BN76450	7,6 x 450	**38,170**	100	1.000	3.000
BN76540	7,6 x 540	**47,193**	100	1.000	3.000
BN88770	8,8 x 770	**83,663**	50	1.000	1.000
BN12225	12,5 x 225	**54,673**	50	500	2.000
BN12500	12,5 x 500	**115,390**	50	-	1.000
BN12720	12,5 x 720	**163,910**	50	-	1.000
BN12850	12,5 x 850	**189,547**	50	-	1.000
BN12100	12,5 x 1000	**232,730**	50	-	1.000

Blister

CODE	SIZE	€/BAG	PCS.	BAGS
BZBN25100	2,5 x 100	**2,029**	20	20
BZBN25160	2,5 x 160	**2,029**	20	20
BZBN25200	2,5 x 200	**2,029**	20	20
BZBN36140	3,6 x 140	**2,029**	20	20
BZBN36200	3,6 x 200	**2,029**	20	20
BZBN36300	3,6 x 300	**2,565**	20	15
BZBN48160	4,8 x 160	**2,565**	20	15
BZBN48200	4,8 x 200	**2,565**	20	15
BZBN48290	4,8 x 290	**2,565**	10	15
BZBN48370	4,8 x 370	**2,565**	10	15

Display box

CODE	SIZE	€/BOX	PCS.	BOXES
CKBN25080	2,5 x 080	**1,633**	100	30
CKBN25100	2,5 x 100	**1,864**	100	30
CKBN25140	2,5 x 140	**2,766**	100	30
CKBN25160	2,5 x 160	**3,069**	100	20
CKBN25200	2,5 x 200	**3,996**	100	20
CKBN36140	3,6 x 140	**3,821**	100	20
CKBN36200	3,6 x 200	**5,207**	100	20
CKBN36300	3,6 x 300	**8,467**	100	10
CKBN36370	3,6 x 370	**11,469**	100	10
CKBN48120	4,8 x 120	**5,583**	100	20
CKBN48160	4,8 x 160	**6,206**	100	20
CKBN48180	4,8 x 180	**6,613**	100	20
CKBN48200	4,8 x 200	**6,772**	100	20
CKBN48250	4,8 x 250	**9,780**	100	10
CKBN48290	4,8 x 290	**10,583**	100	10
CKBN48370	4,8 x 370	**13,642**	100	10
CKBN76200	7,6 x 200	**16,099**	100	10
CKBN76290	7,6 x 290	**20,270**	100	10
CKBN76370	7,6 x 370	**26,311**	100	8
CKBN12225	12,5 x 225	**28,701**	50	10

100% NYLON

BN-B

Nylon cable tie. White

MULTI-MATERIAL

Cable · Flexible pipe · PVC pipes · Cooper tipe · Steel pipe

NYLON

CODE	SIZE	€/100			
BB25080	2,5 x 80	**1,557**	100	1.000	60.000
BB25100	2,5 x 100	**1,780**	100	1.000	50.000
BB25140	2,5 x 140	**2,637**	100	1.000	50.000
BB25160	2,5 x 160	**2,927**	100	1.000	50.000
BB25200	2,5 x 200	**3,810**	100	1.000	35.000
BB36140	3,6 x 140	**3,643**	100	1.000	30.000
BB36200	3,6 x 200	**4,960**	100	1.000	25.000
BB36250	3,6 x 250	**6,733**	100	1.000	12.000
BB36300	3,6 x 300	**8,063**	100	1.000	12.000
BB36370	3,6 x 370	**10,927**	100	1.000	12.000
BB48120	4,8 x 120	**5,313**	100	1.000	23.000
BB48160	4,8 x 160	**5,910**	100	1.000	23.000
BB48180	4,8 x 180	**6,303**	100	1.000	16.000
BB48200	4,8 x 200	**6,447**	100	1.000	16.000
BB48250	4,8 x 250	**9,310**	100	1.000	12.000
BB48290	4,8 x 290	**10,083**	100	1.000	11.000
BB48370	4,8 x 370	**12,997**	100	1.000	8.000
BB48430	4,8 x 430	**18,397**	100	1.000	8.000
BB76150	7,6 x 150	**14,313**	100	1.000	12.000
BB76200	7,6 x 200	**15,333**	100	1.000	9.000
BB76290	7,6 x 290	**19,303**	100	1.000	5.000
BB76370	7,6 x 370	**25,060**	100	1.000	5.000
BB76450	7,6 x 450	**38,170**	100	1.000	3.000
BB76540	7,6 x 540	**47,193**	100	1.000	3.000
BB88770	8,8 x 770	**83,663**	50	1.000	1.000
BB12225	12,5 x 225	**54,673**	50	500	2.000
BB12500	12,5 x 500	**115,390**	50	-	1.000
BB12720	12,5 x 720	**163,910**	50	-	1.000
BB12850	12,5 x 850	**189,547**	50	-	1.000
BB12100	12,5 x 1000	**232,730**	50	-	1.000

Blister

CODE	SIZE	€/BAG	PCS.	BAGS
BZBB25100	2,5 x 100	**2,029**	20	20
BZBB25160	2,5 x 160	**2,029**	20	20
BZBB25200	2,5 x 200	**2,029**	20	20
BZBB36140	3,6 x 140	**2,029**	20	20
BZBB36200	3,6 x 200	**2,029**	20	20
BZBB36300	3,6 x 300	**2,565**	20	15
BZBB48160	4,8 x 160	**2,565**	20	15
BZBB48200	4,8 x 200	**2,565**	20	15
BZBB48290	4,8 x 290	**2,565**	10	15
BZBB48370	4,8 x 370	**2,565**	10	15

Display box

CODE	SIZE	€/BOX	PCS.	BOXES
CKBB25080	2,5 x 080	**1,633**	100	30
CKBB25100	2,5 x 100	**1,864**	100	30
CKBB25140	2,5 x 140	**2,766**	100	30
CKBB25160	2,5 x 160	**3,069**	100	20
CKBB25200	2,5 x 200	**3,996**	100	20
CKBB36140	3,6 x 140	**3,821**	100	20
CKBB36200	3,6 x 200	**5,207**	100	20
CKBB36300	3,6 x 300	**8,467**	100	10
CKBB36370	3,6 x 370	**11,469**	100	10
CKBB48120	4,8 x 120	**5,583**	100	20
CKBB48160	4,8 x 160	**6,206**	100	20
CKBB48180	4,8 x 180	**6,613**	100	20
CKBB48200	4,8 x 200	**6,772**	100	20
CKBB48250	4,8 x 250	**9,780**	100	20
CKBB48290	4,8 x 290	**10,583**	100	10
CKBB48370	4,8 x 370	**13,642**	100	10
CKBB76200	7,6 x 200	**16,099**	100	10
CKBB76290	7,6 x 290	**20,270**	100	10
CKBB76370	7,6 x 370	**26,311**	100	8
CKBB12225	12,5 x 225	**28,701**	50	8

100% NYLON

TACOBRI N

Cable tie plug. Black



MULTI-MATERIAL

Stone · Hardwood · Hollow brick · Solid brick · Aerated concrete · Hollow concrete · Concrete

NYLON

CODE	DRILL	COLOR	€/100	DRILL Ø		
TACOBRINE6	Ø6		**6,537**	6	100	5.000
TACOBRINE8	Ø8		**6,130**	8	100	5.000

Blister

CODE	SIZE	€/BAG	PCS.	BAGS
BZTABRINE8		**2,029**	4	15

Display box

CODE	SIZE	€/BOX	PCS.	BOXES
CKTACOBRIN6	6	**6,860**	100	10
CKTACOBRIN8	8	**6,434**	100	10

TACOBRI B

Cable tie plug. White

MULTI-MATERIAL

Stone · Hardwood · Hollow brick · Solid brick · Aerated concrete · Hollow concrete · Concrete

NYLON



CODE	DRILL	COLOR	€/100	DRILL Ø		
TACOBRIBL6	Ø6		**6,680**	6	100	5.000
TACOBRIBL8	Ø8		**6,130**	8	100	5.000

Blister

CODE	SIZE	€/BAG	PCS.	BAGS
BZTABRIBL8		**2,029**	4	15

Display box

CODE	SIZE	€/BOX	PCS.	BOXES
CKTACOBRIB6	6	**7,014**	100	10
CKTACOBRIB8	8	**6,434**	100	10

BN-GR

Nylon cable tie. Colours. Gray

MULTI-MATERIAL

Cable · Flexible pipe · PVC pipes · Cooper tipe · Steel pipe

NYLON



CODE	SIZE	€/100		
BC25100GR	2,5 x 100	**1,997**	100	50.000
BC36140GR	3,6 x 140	**3,647**	100	30.000
BC36200GR	3,6 x 200	**5,130**	100	25.000
BC48200GR	4,8 x 200	**6,517**	100	16.000
BC48290GR	4,8 x 290	**10,237**	100	11.000

TACOBRI G

Cable tie plug

MULTI-MATERIAL

Stone · Hardwood · Hollow brick · Solid brick · Aerated concrete · Hollow concrete · Concrete

NYLON



CODE	DRILL	COLOR	€/100	DRILL Ø		
TACOBRIGR8	M4 x 10		**8,043**	8	100	5.000

BN-DT

Brida detectable

MULTI-MATERIAL

Cable · Flexible pipe · PVC pipes · Cooper tipe · Steel pipe

NYLON



CODE	SIZE	€/100		
BNDT25100	2,5 x 100	**3,543**	100	50.000
BNDT36150	3,6 x 150	**8,267**	100	30.000
BNDT36200	3,6 x 200	**10,627**	100	25.000
BNDT48200	4,8 x 200	**12,987**	100	16.000
BNDT48300	4,8 x 300	**20,070**	100	11.000
BNDT48370	4,8 x 370	**28,337**	100	8.000
BNDT76370	7,6 x 370	**51,950**	100	5.000

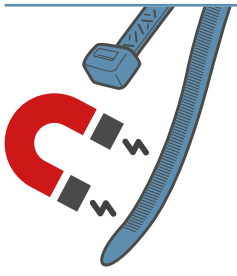

DETECTABLE CABLE TIE with metal particles

- TRIPLE DETECTION:

MAGNETIC ***X-RAYS*** ***VISUAL***

- COMPATIBLE AS PART OF THE HACCP*/APPCC PROCESS.**

*HACCP: Hazard Analysis and Critical Control Points). Food safety system based on the identification of all potential hazards in ingredients and various food production processes.

** APPCC: Hazard Analysis and Critical Control Points.

BN-ID

Nylon cable tie for identification



MULTI-MATERIAL

Flexible pipe | PVC pipes | Cooper tipe | Steel pipe | NYLON

CODE	SIZE	€/100		
BID25110	2,5 x 110	**11,797**	100	16.000
BID25210	2,5 x 210	**25,953**	100	12.000

BN-PL

Identification plaque for nylon cable ties up to 4,8 mm.

MULTI-MATERIAL

Flexible pipe | PVC pipes | Cooper tipe | Steel pipe | NYLON

CODE	SIZE	€/100		
BPL02616	26,4 x 16,2	**27,813**	100	5.000

BN-BA

Two-way, adhesive base for nylon clable ties



MULTI-MATERIAL

Metal sheet - heavy profiles | Hardwood | Plaster-board | Aluminium frames | NYLON

CODE	SIZE	COLOR	€/100		
BBANA19	19 x 19		**25,430**	100	15.000
BBANA27	27 x 27		**36,380**	100	6.000
BBANE19	19 x 19		**25,430**	100	15.000
BBANE27	27 x 27		**36,380**	100	6.000

BN-CO

Nylon cable tie. Colours

BN-VE

Green



MULTI-MATERIAL

Flexible pipe | PVC pipes | Cooper tipe | Steel pipe | NYLON

CODE	SIZE	€/100		
BC25100VE	2,5 x 100	**1,820**	100	50.000
BC36140VE	3,6 x 140	**4,610**	100	30.000
BC36200VE	3,6 x 200	**5,923**	100	25.000
BC48200VE	4,8 x 200	**8,117**	100	16.000
BC48290VE	4,8 x 290	**12,120**	100	11.000

Display box

CODE	SIZE	€/BOX	PCS.	BOXES
CKBC25100VE	2,5 x 100	**1,912**	100	30
CKBC36140VE	3,6 x 140	**4,845**	100	20
CKBC36200VE	3,6 x 200	**6,216**	100	20
CKBC48200VE	4,8 x 200	**8,522**	100	20
CKBC48290VE	4,8 x 290	**12,727**	100	10

BN-CO

Nylon cable tie. Colours

MULTI-MATERIAL

Flexible pipe | PVC pipes | Cooper tipe | Steel pipe | NYLON

BN-MA

Brown



CODE	SIZE	€/100		
BC25100MA	2,5 x 100	**1,820**	100	50.000
BC36140MA	3,6 x 140	**4,610**	100	30.000
BC36200MA	3,6 x 200	**5,923**	100	25.000
BC48200MA	4,8 x 200	**8,117**	100	16.000
BC48290MA	4,8 x 290	**12,120**	100	11.000

Display box

CODE	SIZE	€/BOX	PCS.	BOXES
CKBC25100MA	2,5 x 100	**1,912**	100	30
CKBC36140MA	3,6 x 140	**4,845**	100	20
CKBC36200MA	3,6 x 200	**6,216**	100	20
CKBC48200MA	4,8 x 200	**8,522**	100	18
CKBC48290MA	4,8 x 290	**12,727**	100	10

MULTI-MATERIAL

Flexible pipe | PVC pipes | Cooper tipe | Steel pipe | NYLON

BN-AM

Yellow



CODE	SIZE	€/100		
BC25100AM	2,5 x 100	**1,820**	100	50.000
BC36140AM	3,6 x 140	**4,610**	100	30.000
BC36200AM	3,6 x 200	**5,923**	100	25.000
BC48200AM	4,8 x 200	**8,117**	100	16.000
BC48290AM	4,8 x 290	**12,120**	100	11.000

MULTI-MATERIAL

Flexible pipe | PVC pipes | Cooper tipe | Steel pipe | NYLON

BN-AZ

Blue



CODE	SIZE	€/100		
BC25100AZ	2,5 x 100	**1,820**	100	50.000
BC36140AZ	3,6 x 140	**4,610**	100	30.000
BC36200AZ	3,6 x 200	**5,923**	100	25.000
BC48200AZ	4,8 x 200	**8,117**	100	16.000
BC48290AZ	4,8 x 290	**12,120**	100	11.000

Display box

CODE	SIZE	€/BOX	PCS.	BOXES
CKBC25100AZ	2,5 x 100	**1,912**	100	30
CKBC36140AZ	3,6 x 140	**4,845**	100	20
CKBC36200AZ	3,6 x 200	**6,216**	100	20
CKBC48200AZ	4,8 x 200	**8,522**	100	18
CKBC48290AZ	4,8 x 290	**12,727**	100	10

MULTI-MATERIAL

Flexible pipe | PVC pipes | Cooper tipe | Steel pipe | NYLON

BN-RO

Red



CODE	SIZE	€/100		
BC25100RO	2,5 x 100	**1,820**	100	50.000
BC36140RO	3,6 x 140	**4,610**	100	30.000
BC36200RO	3,6 x 200	**5,923**	100	25.000
BC48200RO	4,8 x 200	**8,117**	100	16.000
BC48290RO	4,8 x 290	**12,120**	100	11.000

Display box

CODE	SIZE	€/BOX	PCS.	BOXES
CKBC25100RO	2,5 x 100	**1,912**	100	30
CKBC36140RO	3,6 x 140	**4,845**	100	20
CKBC36200RO	3,6 x 200	**6,216**	100	20
CKBC48200RO	4,8 x 200	**8,522**	100	18
CKBC48290RO	4,8 x 290	**12,727**	100	10

AB-IN

Simple polypropylene pipe clip with M6 threaded brass insert



02 P. 407 Technical info.

Halogen free

UV resistant

M6 L BRASS

PVC pipes · Cooper tipe · Steel pipe · POLYPROPYLENE

CODE	SIZE	€/100	ØD(MM)	MAXIMUN LOAD		
ABIN012	12	**32,807**	12	10	100	1.200
ABIN014	14-15	**35,677**	14-15	10	100	600
ABIN016	16-18	**44,897**	16-18	10	100	600
ABIN020	20-22	**47,020**	20-22	10	100	400
ABIN025	25	**59,583**	25	10	50	300
ABIN028	28	**60,840**	28	10	50	300
ABIN032	32	**81,560**	32	10	25	150
ABIN035	35	**92,550**	35	10	25	300

Self-Service

CODE	SIZE	€/BAG	PCS.	BAGS
LSABIN012	12	**5,788**	10	6
LSABIN014	14-15	**6,060**	10	5
LSABIN016	16-18	**5,630**	8	6
LSABIN020	20-22	**4,887**	6	5
LSABIN028	28	**4,456**	4	6

INSTALLATION

CHANNEL



AB-ID

Double nylon pipe clip (polyamide 6.6) with M6 threaded brass insert



02 P. 407 Technical info.

Halogen free

UV resistant

M6 L BRASS

PVC pipes · Cooper tipe · Steel pipe · POLYPROPYLENE

CODE	SIZE	€/100	ØD(MM)	MAXIMUN LOAD		
ABID012	12	**64,683**	12	10	50	200
ABID014	14-15	**67,900**	14-15	10	50	300
ABID016	16-18	**86,640**	16-18	10	50	200
ABID020	20-22	**91,780**	20-22	10	50	150
ABID028	28	**113,317**	28	10	25	100

Self-Service

CODE	SIZE	€/BAG	PCS.	BAGS
LSABID012	12	**5,964**	6	6
LSABID014	14-15	**6,207**	6	5
LSABID016	16-18	**3,626**	2	6
LSABID020	20-22	**3,729**	2	6
LSABID028	28	**4,177**	2	6

INSTALLATION

CHANNEL



APPLICATION EXAMPLES







Closed polypropilene pipe clip with pre-thread M6

AB-GU

PVC pipes · Cooper tipe · Steel pipe · POLYPROPILENE POLYPROPYLENE

CODE	SIZE	€/100	ØD(MM)	MAXIMUN LOAD		
ABGUG15	15	**22,653**	15	40	100	400
ABGUG18	18	**22,880**	18	40	100	400
ABGUG20	20	**24,083**	20	40	100	400
ABGUG22	22	**25,510**	22	40	100	300
ABGUG25	25	**28,343**	25	40	50	300
ABGUG28	28	**35,453**	28	40	50	200
ABGUG32	32	**38,603**	32	40	25	150
ABGUG40	40	**51,343**	40	40	25	150
ABGUG50	50	**61,570**	50	40	25	100



02 P. 407 Technical info.

Halogen free

UV resistant

Self-Service

CODE	SIZE	€/BAG	PCS.	BAGS
LSABGUG15	15	**3,472**	8	6
LSABGUG18	18	**3,181**	6	6
LSABGUG20	20	**2,727**	4	7
LSABGUG22	22	**2,852**	4	7
LSABGUG25	25	**2,519**	2	6
LSABGUG28	28	**2,561**	2	6
LSABGUG32	32	**2,685**	2	6
LSABGUG40	40	**2,893**	2	6
LSABGUG50	50	**3,102**	2	6

INSTALLATION

CHANNEL



GUN



ANCHOR + SCREW



BARREL FOR ELECTRICIANS



Multiuse pipe clamp

AB-MUG

PVC pipes · Cooper tipe · Steel pipe · Cable · POLYPROPILENE POLYPROPYLENE

CODE	SIZE	€/100	MAXIMUN LOAD		
ABMUG15	15-16	**21,130**	40	100	400
ABMUG18	18-20	**26,637**	40	100	400
ABMUG22	22-25	**31,643**	40	100	300
ABMUG26	26-28	**39,523**	40	50	150
ABMUG32	32-35	**51,007**	40	50	150
ABMUG40	40-42	**69,007**	40	50	100
ABMUG48	48-50	**82,947**	40	25	75



02 P. 408 Technical info.

Halogen free

UV resistant

EXPRESS



Self-Service

CODE	SIZE	€/BAG	PCS.	BAGS
LSABMUG15	15-16	**3,487**	8	6
LSABMUG18	18-20	**3,387**	6	6
LSABMUG22	22-25	**3,015**	4	7
LSABMUG26	26-28	**2,582**	2	6
LSABMUG32	32-35	**2,829**	2	6

INSTALLATION

CHANNEL



GUN



ANCHOR + SCREW



BARREL FOR ELECTRICIANS



AB-PR

Duty pipe clamp with pre-thread M6



02 P. 394 Technical info.

Halogen free

UV resistant

PVC pipes · Cooper tipe · Steel pipe · POLIPROPILENO POLYPROPYLENE

CODE	SIZE	€/100	ØD(MM)	MAXIMUN LOAD		
ABPRG15	15-18	**24,493**	15-18	10	100	400
ABPRG20	20-22	**25,287**	20-22	10	100	400
ABPRG25	25-28	**30,603**	25-28	10	100	300
ABPRG32	32-35	**43,130**	32-35	10	25	150
ABPRG40	40	**55,667**	40	10	25	150
ABPRG50	50	**70,163**	50	10	25	100

Self-Service

CODE	SIZE	€/BAG	PCS.	BAGS
LSABPRG15	15-18	**3,825**	8	6
LSABPRG20	20-22	**3,042**	4	5
LSABPRG25	25-28	**2,850**	3	6

INSTALLATION

CHANNEL



GUN



ANCHOR + SCREW



BARREL FOR ELECTRICIANS



AB-MS

Multitube clamp + plug. Single



02 P. 408 Technical info.

PVC pipes · Cooper tipe · Steel pipe · Cable · Ny NYLON

CODE	ØD(MM)	SIZE	€/100	SCREW SIZE		
ABMS10	10	5 x 20 Ø5	**28,150**	3,5x35	100	1.200
ABMS12	12	5 x 20 Ø5	**30,007**	3,5x35	100	1.200
ABMS14	14	6 x 25 Ø6	**41,827**	4x45	100	600
ABMS16	16	6 x 25 Ø6	**43,170**	4x45	100	600
ABMS18	18	8 x 30 Ø8	**56,770**	4,5x50	100	300
ABMS20	20	8 x 30 Ø8	**58,120**	4,5x50	50	300
ABMS22	22	8 x 30 Ø8	**59,410**	4,5x50	50	300
ABMS26	26	10 x 40 Ø10	**111,817**	6x60	50	150
ABMS28	28	10 x 40 Ø10	**113,607**	6,5x60	50	150

AB-MD

Multitube clamp + plug. Double



02 P. 409 Technical info.

PVC pipes · Cooper tipe · Steel pipe · Cable · Ny NYLON

CODE	ØD(MM)	SIZE	€/100	SCREW SIZE		
ABMD10	10	8 x 30 Ø8	**55,667**	4,5x50	100	300
ABMD12	12	8 x 30 Ø8	**56,800**	4,5x50	100	300
ABMD14	14	8 x 30 Ø8	**57,933**	4,5x50	100	300
ABMD16	16	8 x 30 Ø8	**57,023**	4,5x50	100	300
ABMD18	18	10 x 40 Ø10	**80,563**	6x60	100	200
ABMD20	20	10 x 40 Ø10	**85,513**	6x60	50	150
ABMD22	22	10 x 40 Ø10	**88,077**	6x60	50	150
ABMD26	26	10 x 40 Ø10	**140,603**	6x60	50	100
ABMD28	28	10 x 40 Ø10	**141,680**	6x60	50	100

INDEXring tube fixing plug AB-T

PVC pipes · Cooper tipe · Steel pipe · Cable · NYLON

AB-TS

Simple

CODE	SIZE	€/100	SIZE IN INCHES	ØD(MM)	MAXIMUN LOAD		
ABTS014	14	**27,887**	-	14 - 15	30	100	600
ABTS016	16	**28,890**	3/8"	16 - 17	30	100	400
ABTS018	18	**31,220**	-	18 - 19	30	100	400
ABTS020	20	**31,743**	1/2"	20 - 21	30	100	300
ABTS022	22	**32,553**	-	22 - 23	30	100	300
ABTS025	25	**33,610**	3/4"	25 - 26	30	100	300
ABTS028	28	**39,900**	-	28 - 29	30	100	200
ABTS032	30	**51,427**	-	30 - 32	30	50	150

Self-Service

CODE	SIZE	€/BAG	PCS.	BAGS
LSABTS018	18	**3,808**	6	6
LSABTS022	22	**4,056**	6	6

02 P. 409 Technical info.



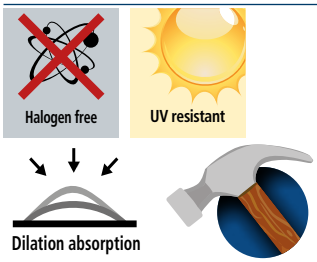

AB-TD

Double

PVC pipes · Cooper tipe · Steel pipe · Cable · NYLON

CODE	SIZE	€/100	SIZE IN INCHES	ØD(MM)	MAXIMUN LOAD		
ABTD016	16	**34,007**	3/8"	15 - 16	30	100	400
ABTD018	18	**38,667**	-	18 - 19	30	100	300
ABTD020	20	**39,587**	1/2"	20 - 21	30	100	200
ABTD022	22	**42,630**	-	22 - 23	30	100	200
ABTD025	25	**46,417**	3/4"	25 - 26	30	100	200
ABTD028	28	**61,863**	-	28 - 29	30	50	150

Self-Service

CODE	SIZE	€/BAG	PCS.	BAGS
LSABTD018	18	**3,550**	4	6
LSABTD022	22	**2,659**	2	7

02 P. 409 Technical info.



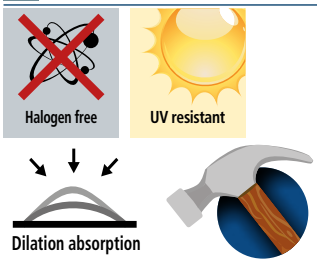

AB-TC

Quadruple

PVC pipes · Cooper tipe · Steel pipe · Cable · NYLON

CODE	SIZE	€/100	SIZE IN INCHES	ØD(MM)	MAXIMUN LOAD		
ABTC020	20	**65,867**	1/2"	20 - 21	30	50	100
ABTC025	25	**80,987**	3/4"	25 - 26	30	50	100



02 P. 410 Technical info.

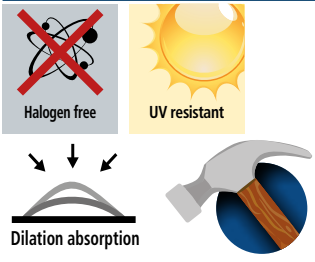

APPLICATION EXAMPLES







FI-CA Cable clamp

FI-CA AB

Clamp



Flexible pipe

CODE	SIZE	€/100	
FICAAB080	80	**160,000**	50
FICAAB119	119	**266,667**	25

FI-CA PS

Single clamp



Flexible pipe

CODE	SIZE	€/100	
FICAPS080	80	**76,667**	50

FI-CA PD

Double clamp



Flexible pipe

CODE	SIZE	€/100	
FICAPD160	80 (x2)	**113,333**	50

FI-CA CL

Clip

Flexible pipe

CODE	SIZE	€/100	DRILL	
FICACL13	Ø13	**16,333**	Ø6	200
FICACL26	Ø16	**21,667**	Ø6	100

Cable clamp FI-CA

GR-NY BL

White



CODE	SIZE	€/100	SUITABLE FOR	MIN. ORDER QTY.	
GRBL001	2 x 0,7	**6,390**	Parallel cable	400	100
GRBL002	2 x 0,4 - 0,7 ó 1	**6,740**	Parallel cable	400	100
GRBL003	2 x 1 - 3 x 0,7	**6,820**	Flat cable 6 x 2	400	100
GRBL010	2 x 0,7 - 2 x 1	**8,117**	Flat cable 6 x 3	400	100
GRBL020	2 x 1,5 - 3 x 1	**8,243**	Flat cable 7,5 x 3,5	400	100
GRBL030	3 x 1,5 - 3 x 2,5	**9,973**	Flat cable 10 x 3,5	400	100
GRBL040	1 x 1 - 2 x 0,5	**7,860**	Round cable Ø4	400	100
GRBL050	2 x 0,75	**8,073**	Round cable Ø5	400	100
GRBL060	2 x 1	**8,550**	Round cable Ø6	400	100
GRBL070	2 x 1-1,5	**9,327**	Round cable Ø7	400	100
GRBL080	2 x 2,5	**9,410**	Round cable Ø8	400	100
GRBL090	3 x 2,5	**10,363**	Round cable Ø9	400	100
GRBL100	2 x 4	**11,570**	Round cable Ø10	200	100
GRBL120	3 x 6	**14,207**	Round cable Ø12	200	100
GRBL140	4 x 6	**16,877**	Round cable Ø14	200	100

Blister

CODE	SIZE	€/BAG	PCS.	BAGS
BZGRB100	2 x 4	**2,565**	6	20
BZGRB010	2 x 1	**2,565**	6	20
BZGRB120	3 x 6	**2,565**	6	15
BZGRB001	2 x 0,7	**2,565**	6	20
BZGRB050	2 x 0,75	**2,565**	6	20
BZGRB060	2 x 1	**2,565**	6	20
BZGRB070	2 x 1-1,5	**2,565**	6	20
BZGRB080	2 x 2,5	**2,565**	6	20
BZGRB090	3 x 2,5	**2,565**	6	20

GR-NY N

Black



CODE	SIZE	€/100	SUITABLE FOR	MIN. ORDER QTY.	
GRNE060	2 x 1	**8,550**	Round cable	400	100
GRNE070	2 x 1 - 2 x 1,5	**9,327**	Round cable	400	100
GRNE080	2 x 2,50	**9,410**	Round cable	400	100
GRNE090	3 x 2,50	**10,363**	Round cable	400	100
GRNE100	2 x 4	**11,570**	Round cable	200	100
GRNE120	3 x 6	**14,207**	Round cable	200	100

GR-NY NT

Natural colour



CODE	SIZE	€/100	SUITABLE FOR	MIN. ORDER QTY.		
GRNATTV	GRAPILLA - CLIP - CRAMPON TV - CLIP	**11,160**	Round cable	200	100	2.000

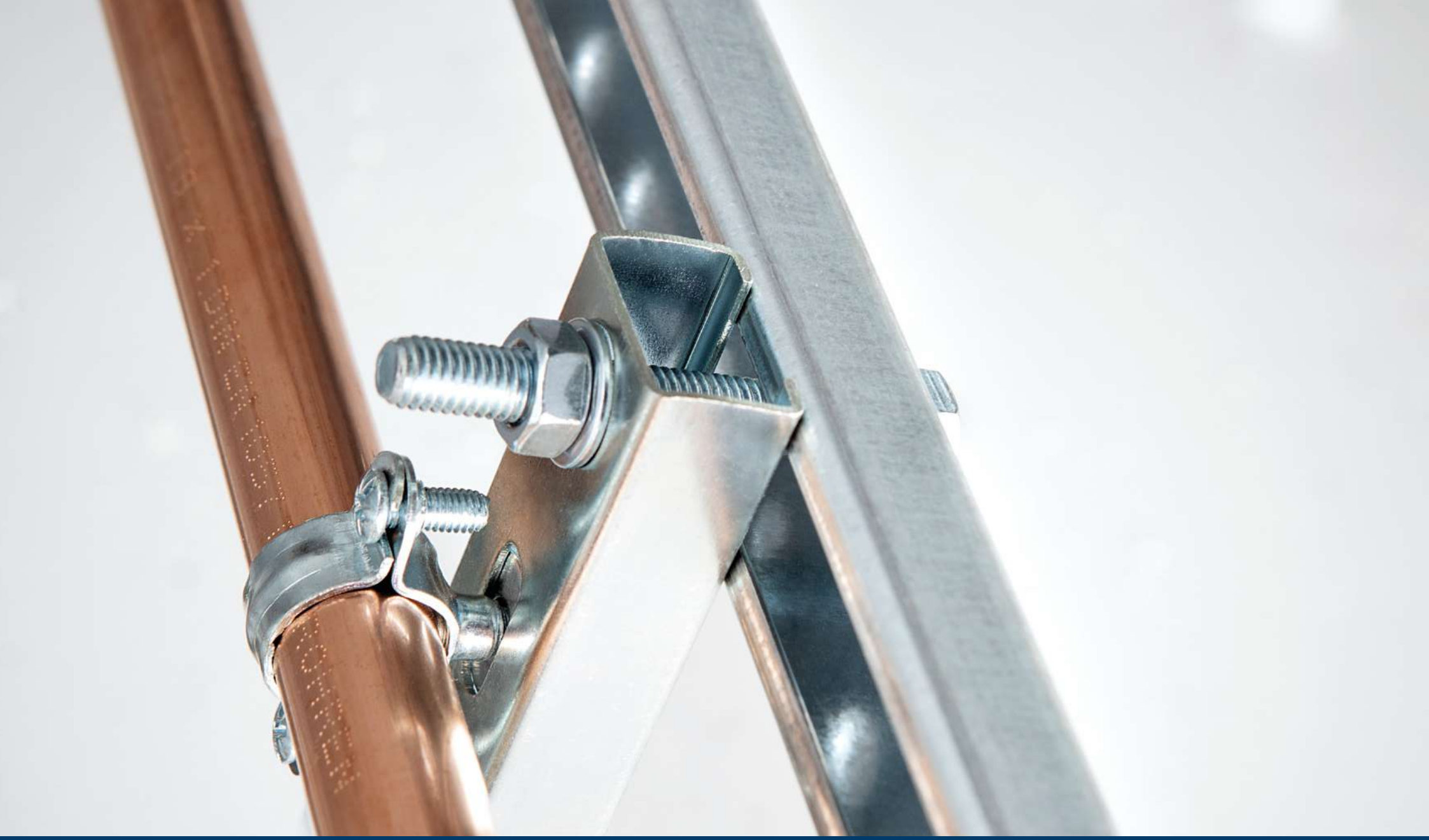

PROFILES AND SUPPORTS

COMPATIBILITY TABLE

| | | | | CHANNEL CANTILEVER ARMS | | | | | | | | | | | | CHANNEL BRACKETS | | | | | | | | | | | |

CHANNEL U-FITTINGS									CHANNEL STUD NUTS												CHANNEL NUTS																						PLASTIC CAPS				
GZ2718	PGZ2830	PGZ3840	PGI2718	PGI2830	PGI3840	PCX4121	PGX4141		TG230620	TG230820	TG230830	TG340830	TG341030	TGR230620	TGR230820	TGR230830	TGR340830	TGR341030	TGRX0830	TGRX0860	TGRX1030	TGRX1060		TUG201006	TUG201008	TUG271808	TUG271810	TUGRA2706	TUGRA2708	TUGRA3808	TUGRA3810	TUGX08	TUGX10	TUGXMU08	TUGXMU10	TURX08	TURX10	TURX12	TURXA08	TURXA10		SOTP2718	SOTP2830	SOTP3840	SOTP4121	SOTP4141
									M6 x 20	M8 x 20	M8 x 30	M8 x 30	M10 x 30	M6 x 20	M8 x 20	M8 x 30	M8 x 30	M10 x 30	M8 x 30	M8 x 60	M10 x 30	M10 x 60		M6	M8	M8	M10	M6	M8	M8	M10	M8	M10	Spring nut	Spring nut											
●									●															●	●																				
									●															●	●																				
●									●	●	●			●	●	●								●	●	●	●	●	●													●				
	●									●	●			●	●	●								●	●	●	●	●	●														●			
		●										●	●				●	●								●	●				●	●												●		
			●									●	●				●	●								●	●				●	●													●	
				●																																										
					●																																									
●									●	●														●	●	●	●																		
						●													●	●	●	●											●	●	●	●	●	●	●	●	●				
						●													●	●	●	●											●	●	●	●	●	●	●	●	●				
						●													●	●	●	●											●	●	●	●	●	●	●	●	●				●
							●												●	●	●	●											●	●	●	●	●	●	●	●	●				
							●												●	●	●	●											●	●	●	●	●	●	●	●	●				
							●												●	●	●	●											●	●	●	●	●	●	●	●	●				
								●

GP

Type “C” profiles for light loads

GP-Z

Zinc-plated



METAL

CODE	SIZE	€/100	LENGTH	
GPZ201010	20 x 10 x 1 x 2000	**872,193**	2.000	30
GPZ250808	25 x 8 x 0,80 x 1000	**604,403**	1.000	30

GP-G

ATLANTIS C2-H



METAL

CODE	SIZE	€/100	LENGTH	
GPG271812	27 x 18 x 1,25 x 2000	**1.478,793**	2.000	10
GPG283018	28 x 30 x 1,8 x 2000	**2.967,427**	2.000	10
GPG351312	35 x 13 x 1,2 x 2000	**2.923,683**	2.000	10
GPG384020	38 x 40 x 2 x 2000	**5.041,500**	2.000	6
GPG402015	40 x 20 x 1,50 x 2000	**2.302,116**	2.000	10

GP-A2

A2 Stainless steel



STAINLESS STEEL

CODE	SIZE	€/100	LENGTH	
GPI271812	27 x 18 x 1,25 x 2000	**12.032,189**	2.000	6
GPI283015	28 x 30 x 1,50 x 2000	**27.975,448**	2.000	6

GP-PL

Yellow plastified



METAL

CODE	SIZE	€/100	LENGTH	
GPP271812	27 x 18 x 1,25	**2.069,667**	1.000	10

GP-PVC

PVC



METAL

CODE	SIZE	€/100	LENGTH	
GPV251120	25 x 11 x 2 x 1000	**843,660**	1.000	30

Type “C” profiles for light loads — GP

METAL

GL-O

ATLANTIS C2-M Smooth Omega guide

CODE	SIZE	€/100	LENGTH	
GLO357510	35x7,5x1,0	**1.248,443**	2.000	10
GLO351515	35x15x1,5	**1.655,013**	2.000	10



METAL

GP-O

ATLANTIS C2-M Perforated Omega guide

CODE	SIZE	€/100	LENGTH	
GPO357510	35x7,5x1,0	**1.258,747**	2.000	10
GPO351515	35x15x1,5	**1.649,893**	2.000	10



Type “C” supports for light loads — SP

METAL

SP-Z

Zinc-plated perforated support

CODE	SIZE	€/100	LENGTH	
SPZ271820	27 x 18 x 1,25 x 200	**776,810**	200	10
SPZ271830	27 x 18 x 1,25 x 300	**838,267**	300	10
SPZ384020	38 x 40 x 2 x 200	**1.270,253**	200	10
SPZ384025	38 x 40 x 2 x 250	**1.425,973**	250	10
SPZ384030	38 x 40 x 2 x 300	**1.567,947**	300	10
SPZ384035	38 x 40 x 2 x 350	**1.679,877**	350	10
SPZ384040	38 x 40 x 2 x 400	**1.957,943**	400	10
SPZ384050	38 x 40 x 2 x 500	**2.377,794**	500	10
SPZ384060	38 x 40 x 2 x 600	**2.647,880**	600	10



METAL

SP-V

Vertical support

CODE	SIZE	€/100	SUITABLE FOR	
SPV2718	M10 (27/18-28/30)	**556,423**	27/18 - 28/30	50
SPV3840	M10 (38/40-40/20)	**591,583**	38/40 - 40/20	50



SP

Type “C” supports for light loads

SP-H

Horizontal support



METAL

CODE	SIZE	€/100	SUITABLE FOR	
SPH2718	M10 (27/18-28/30)	**497,013**	27/18 - 28/30	50
SPH3840	M10 (38/40-40/20)	**515,487**	38/40 - 40/20	50

SP-HX

Horizontal channel arm



METAL

CODE	SIZE	€/100	SUITABLE FOR	
SPGH2718	M10 (27/18-28/30)	**780,340**	27/18 - 28/30	10
SPGH3840	M10 (38/40-40/20-41/21-41/41)	**1.516,640**	38/40 - 40/20 - 41/21 - 41/41	10

PE-AC

Accessories for type “C” profiles

TO-GU

Guide stop screw



METAL

CODE	SIZE	€/100	SUITABLE FOR		
TG230620	M6 x 20	**66,583**	20/10 -27/18 - 28/30 - 25/08 - 25/11	100	800
TG230820	M8 x 20	**82,883**	27/18 - 28/30 - 25/08	100	400
TG230830	M8 x 30	**87,237**	27/18 - 28/30 - 25/08	100	600
TG340830	M8 x 30	**120,040**	38/40 - 40/20	100	600
TG341030	M10 x 30	**161,920**	38/40 - 40/21	100	400

TO-GR

Fast-fixing guide stop screw



METAL

CODE	SIZE	€/100	SUITABLE FOR		
TGR230620	M6x20	**184,313**	20/10 - 25/08 - 25/11 - 27/18 - 28/30	100	600
TGR230820	M8x20	**194,827**	20/10 - 25/08 - 25/11 - 27/18 - 28/30	100	600
TGR230830	M8x30	**199,467**	20/10 - 25/08 - 25/11 - 27/18 - 28/30	100	600
TGR340830	M8x30	**250,530**	27/18 - 28/30 - 38/40 - 40/20	100	400
TGR341030	M10x30	**282,887**	27/18 - 28/30 - 38/40 - 40/20	50	300

TU-GU

Channel nuts



METAL

CODE	SIZE	€/100	SUITABLE FOR		
TUG201006	M6	**17,963**	20/10 - 25/08 - 27/18 - 28/30	100	3.000
TUG201008	M8	**17,963**	20/10 - 25/08 - 27/18 - 28/30	100	2.400
TUG271808	M8	**48,370**	27/18 - 28/30 - 38/40 - 40/20	100	1.200
TUG271810	M10	**48,370**	27/18 - 28/30 - 38/40 - 40/20	100	1.200

Accessories for type “C” profiles

PE-AC

TU-GRA

Guide nut with fast-fixing washer



METAL

CODE	SIZE	€/100	SUITABLE FOR		
TUGRA2706	M6	**165,203**	20/10 - 25/08 - 25/11 - 27/18 - 28/30	50	600
TUGRA2708	M8	**165,203**	20/10 - 25/08 - 25/11 - 27/18 - 28/30	50	600
TUGRA3808	M8	**211,863**	27/18 - 28/30 - 38/40 - 40/20	50	600
TUGRA3810	M10	**225,540**	27/18 - 28/30 - 38/40 - 40/20	50	600

EG-Z

Zinc-plated channel bracket



METAL

CODE	SIZE	€/100	SUITABLE FOR		
EMZ45	50 x 50 45°	**126,340**	25/11 - 27/18 - 28/30 - 38/40 - 40/20 - 41/21 - 41/41	100	400
EMZ90	54 x 54 90°	**126,340**	25/11 - 27/18 - 28/30 - 38/40 - 40/20 - 41/21 - 41/41	100	300
EMZ00	100 180°	**123,183**	25/11 - 27/18 - 28/30 - 38/40 - 40/20 - 41/21 - 41/41	100	-

EG-A2

A2 Stainless steel channel bracket



STAINLESS STEEL

CODE	SIZE	€/100	SUITABLE FOR		
EMI45	50 x 50 45°	**617,260**	27/18 - 28/30 - 38/40	50	200
EMI90	54 x 54 90°	**617,260**	27/18 - 28/30 - 38/40	50	-
EMI00	100 180°	**611,967**	27/18 - 28/30 - 38/40	50	200

PU-Z

Union plate for profiles



METAL

CODE	SIZE	€/100	SUITABLE FOR	
PUZ2718	M8 (27/18-28/30)	**56,987**	50	-
PUZ3840	M8 (38/40)	**63,023**	50	-

PG-Z

Zinc-plated Channel U-fitting



METAL

CODE	SIZE	€/100	SUITABLE FOR		
PGZ2718	27 / 18 x 81	**106,597**	27/18	50	300
PGZ2830	28 / 30 x 81	**129,097**	28/30	50	300
PGZ3840	38 / 40 x 93	**144,030**	38/40	50	100

PG-A2

A2 Stainless steel Channel U-fitting



STAINLESS STEEL

CODE	SIZE	€/100	SUITABLE FOR		
PGI2718	27 / 18 x 81	**301,077**	27/18	50	300
PGI2830	28 / 30 x 81	**346,240**	28/30	50	200
PGI3840	38 / 40 x 93	**421,507**	38/40	50	100

PE-AC

Accessories for type “C” profiles

SO-TP

Plastic caps



METAL

CODE	SIZE	€/100	SUITABLE FOR		
SOTP2718	27/18	**31,497**	27/18	100	400
SOTP2830	28/30	**37,880**	28/30	100	300
SOTP3840	38/40	**61,410**	38/40	100	300

GPX

Indextrut Profiles for heavy loads

GP-X 21

Indextrut Perforated guide 41x21



METAL

CODE	SIZE	€/100	LENGTH	
GPX412115	41 x 21 x 1,5	**5.172,350**	3.000	10
GPX412120	41 x 21 x 2	**5.550,103**	3.000	10
GPX412125	41 x 21 x 2,5	**7.970,713**	3.000	6
GPX2M412120	41 x 21 x 2	**3.881,187**	2.000	10

GP-X 41

Indextrut Perforated guide 41x41



METAL

CODE	SIZE	€/100	LENGTH	
GPX414115	41 x 41 x 1,5	**6.278,517**	3.000	10
GPX414120	41 x 41 x 2	**9.120,367**	3.000	6
GPX414125	41 x 41 x 2,5	**11.254,700**	3.000	6
GPX2M414120	41 x 41 x 2	**6.146,427**	2.000	10

SPX

Indextrut Supports for heavy loads

SP-X

Indextrut Perforated support



METAL

CODE	SIZE	€/100	LENGTH	
SPX412115	41 x 21 x 2,5 x 150	**1.123,907**	150	10
SPX412130	41 x 21 x 2,5 x 300	**1.547,242**	300	10
SPX412145	41 x 21 x 2,5 x 450	**1.964,934**	450	10
SPX414115	41 x 41 x 2,5 x 150	**1.456,371**	150	10
SPX414130	41 x 41 x 2,5 x 300	**2.040,254**	300	10
SPX414145	41 x 41 x 2,5 x 450	**2.667,989**	450	10
SPX414160	41 x 41 x 2,5 x 600	**3.354,439**	600	10
SPX414175	41 x 41 x 2,5 x 750	**4.044,979**	750	10
SPX414110	41 x 41 x 2,5 x 1000	**5.086,880**	1.000	2

SP-RX

Indextrut Rectangular-base “U” support



METAL

CODE	SIZE	€/100	SUITABLE FOR	
SPRXH4121	M12 (41/21-41/41)	**1.492,127**	Indextrut 41/41 - 41/21	12
SPRXV4121	M12 (41/21-41/41)	**1.492,127**	Indextrut 41/41 - 41/21	12

Indextrut Supports for heavy loads — SPX

SP-UX

Indextrut Square-base "U" support

METAL

CODE	SIZE	€/100	SUITABLE FOR	
SPUX412100	M16 (41/21-41/41)	**1.896,047**	Indextrut 41/41 - 41/21	12
SPUX412145	M16 (41/21-41/41)	**1.896,047**	Indextrut 41/41 - 41/21	12



PR-X

Indextrut Adjustable support

METAL

CODE	SUITABLE FOR	€/100	
PRX01	Indextrut 41/41 - 41/21	**1.647,360**	12



RE-SX

Indextrut Support reinforcement

METAL

CODE	SIZE	€/100	SUITABLE FOR	
RESX300	252 x 252 x 6 (300)	**1.250,963**	10	20
RESX550	428 x 428 x 6 (550)	**1.992,833**	10	20

Indextrut Accessories for profiles — PX-AC

TG-X

Indextrut Guide stop screw

METAL

CODE	SIZE	€/100	SUITABLE FOR		
TGX0840	M8 x 40	**119,690**	Indextrut 41/41 - 41/21	100	400
TGX0860	M8 x 60	**128,283**	Indextrut 41/41 - 41/21	50	300
TGX1040	M10 x 40	**152,987**	Indextrut 41/41 - 41/21	50	300
TGX1060	M10 x 60	**171,597**	Indextrut 41/41 - 41/21	50	200



TO-GRX

Indextrut Fast-fixing guide stop screw

METAL

CODE	SIZE	€/100	SUITABLE FOR	
TGRX0830	M8x30	**280,567**	41/41 - 41/21	100
TGRX0860	M8x60	**293,400**	41/41 - 41/21	50
TGRX1030	M10x30	**318,930**	41/41 - 41/21	50
TGRX1060	M10x60	**338,590**	41/41 - 41/21	50



TU-GX

Indextrut Guide nut

METAL

CODE	SIZE	€/100	SUITABLE FOR		
TUGX08	M8	**73,290**	Indextrut 41/41 - 41/21	100	800
TUGX10	M10	**81,040**	Indextrut 41/41 - 41/21	100	800



PX-AC

Indextrut Accessories for profiles

TU-MU

Indextrut channel spring nut



METAL

CODE	SIZE	€/100	SUITABLE FOR		
TUGXMU08	M8	**107,097**	Indextrut 41/41	100	400
TUGXMU10	M10	**107,097**	Indextrut 41/41	100	400

TU-RX

Indextrut Fast-fixing guide nut



METAL

CODE	SIZE	€/100	SUITABLE FOR		
TURX08	M8	**101,450**	Indextrut 41/41 - 41/21	100	400
TURX10	M10	**115,903**	Indextrut 41/41 - 41/21	100	400
TURX12	M12	**128,530**	Indextrut 41/41 - 41/21	50	300

NEW TU-RX A2

INDEXTRUT quick nut. Stainless steel A2



METAL

CODE	SIZE	€/100		
TURXA208	M8	**151,443**	50	300

TU-RXA

Indextrut Guide nut with fast-fixing washer



METAL

CODE	SIZE	€/100	SUITABLE FOR		
TURXA08	M8	**244,850**	41/21 - 41/41	50	50
TURXA10	M10	**267,643**	41/21 - 41/41	50	50

EG-X

Channel bracket Indextrut



METAL

CODE	SIZE	€/100	HOLE NUM	SUITABLE FOR		
EMX4502	86/52 x 40 x 5 45°	**289,167**	2	Indextrut 41/41 - 41/21	25	125
EMX9002	48 x 51 x 5 90°	**188,893**	2	Indextrut 41/41 - 41/21	50	150
EMX1302	71/48 x 40 x 5 135°	**307,823**	2	Indextrut 41/41 - 41/21	20	100
EMX9004	95 x 98 x 5 90°	**298,497**	4	Indextrut 41/41 - 41/21	25	75

SC-RX

Heavyduty angled bracket Indextrut



METAL

CODE	SIZE	€/100	SUITABLE FOR	
SCRX090	100 x 100 x 40	**737,497**	Indextrut 41/41 - 41/21	10

Indextrut Accessories for profiles PX-AC

EMP-X

Indextrut Splice



METAL

CODE	SUITABLE FOR	€/100	
EMPX4121	Indextrut 41/41 - 41/21	**1.156,673**	10

RT-X

Indextrut Ball bushing support



METAL

CODE	SUITABLE FOR	€/100	
RTX01	41/41 - 41/21 – 41/62	**886,247**	10

UN-PX

Indextrut Connector plate



METAL

CODE	HOLE NUM	€/100	SUITABLE FOR		
UNPX412101	1	**78,317**	41/41 - 41/21	50	300
UNPX412102	2	**161,687**	41/41 - 41/21	25	150
UNPX412103	3	**227,370**	41/41 - 41/21	25	125
UNPX412104	4	**282,950**	41/41 - 41/21	10	60

UN-EX

Connector plate Indextrut Square



METAL

CODE	HOLE NUM	€/100	SUITABLE FOR	
UNEX412103	3	**411,773**	41/41 - 41/21	25

UN-TX

Connector plate “T” Indextrut



METAL

CODE	HOLE NUM	€/100	SUITABLE FOR	
UNTX412104	4	**303,160**	41/41 - 41/21 - 41/62	25

PG-X

Channel U-fitting Indextrut



METAL

CODE	HOLE NUM	€/100	SUITABLE FOR		
PGX4121	3	**380,193**	Indextrut 41/21	15	90
PGX4141	5	**503,910**	Indextrut 41/41	10	60

PX-AC

Indextrut Accessories for profiles

AB-GX

Perforated profile clamp Indextrut



METAL

CODE	€/100	SUITABLE FOR	
ABGX4121	**589,183**	Indextrut 41/41 - 41/21	20

SO-TP

Plastic caps



METAL

CODE	SIZE	€/100	SUITABLE FOR		
SOTP4121	41/21	**50,470**	41/21	100	600
SOTP4141	41/41	**52,917**	41/41	100	300

VE-AC

Accesorios de ventilación

UN-CO

Conduit union type “C”



METAL

CODE	SIZE	€/100		
UNCO3220	32 x 20	**58,917**	100	400

SO-PG

Isophonic rubber profile for support



METAL

CODE	SIZE	€/1PC	SUITABLE FOR	LENGTH	
SOPG27	27	**138,805**	27/18 - 28/30	20 m.	1
SOPG38	38	**198,066**	38/40 - 40/20	20 m.	1
SOPG41	41	**202,631**	41/21 - 41/41	20 m.	1

INSTALLATION SYSTEMS AND FIXINGS FOR PHOTOVOLTAIC PANELS

NEW

ISF-GG

Clamps for photovoltaic modules assembly

KFR-SC

Quick pre-assembled clamp



METAL | AL | A2 INOX

CODE	SIZE	€/100		
KFRSC3050	30 - 50	**653,930**	10	240

PGS-A

Simple clamp



METAL | AL

CODE	SIZE	€/100		
PGSA26	26	**103,450**	20	720

GM-A

Aluminium gauge for solar frame



METAL | AL

CODE	SIZE	€/100		
GMA035	35	**180,180**	10	120
GMA040	40	**198,473**	10	120

NEW

ISF-PU

Profiles, joints, channels and connectors for supporting structure

GP-XS

INDEXTRUT solar perforated guide. Atlantis C4-M



METAL | ATLANTIS

CODE	SIZE	€/100	
GPXS4115012	41 x 41 x 1,5 - L.125	**433,173**	50
GPXS4115162	41 x 41 x 1,5 - L.1625	**3.098,237**	10
GPXS4115212	41 x 41 x 1,5 - L.2125	**3.985,367**	10
GPXS4115325	41 x 41 x 1,5 - L.3250	**6.095,663**	6

EMP-XS

INDEXTRUT solar connector. Atlantis C4-M



METAL | ATLANTIS

CODE	SIZE	LENGTH	€/100	
EMPXS4115	41 x 41 x 1,5	120	**524,383**	40

Profiles, joints, channels and connectors for supporting structure

ISF-PU NEW

METAL

PSA-A

Winged aluminum profile

CODE	SIZE	€/100	
PSAA0400	80 x 35 - L.400	1.142,517	20
PSAA2125	80 x 35 - L.2125	5.336,223	2
PSAA3150	80 x 35 - L.3150	7.795,997	2



METAL

PSA-AV

Winged aluminum profile for direct fixing at the bottom of panel

CODE	SIZE	€/100	
PSAAV0150	41 x 33 x 1,8	897,940	20



METAL

PSA-UN

Winged aluminum profile connector

CODE	SIZE	SUITABLE FOR	€/100	
PSAUN200	200	PSA-UN	383,080	20



METAL

PSE-A

Aluminium profile for assembled fixing

CODE	SIZE	€/100	
PSEA601575	47 x 60 - L.1575	4.836,207	2
PSEA602125	47 x 60 - L.2125	6.498,457	2
PSEA603150	47 x 60 - L.3150	9.521,867	2



METAL

PSE-UN

Connector for aluminium profile for assembled fixing

CODE	SIZE	VÁLDO PARA	€/100	
PSEUN060200	60 x 200	PSE-A	533,173	20



NEW

ISF-CC

Connectors + Accessories for the solar structures assembly

KFS-FI

Cross connector for bottom fixing. Stainless steel A2



METAL

CODE	SIZE	€/100	
KFSFIM08	M8	**163,187**	100

KFS-FL

Cross connector for lateral fixing. Stainless steel A2



METAL

CODE	SIZE	€/100		
KFSFLM08	M8	**339,487**	10	80

TU-RX A2

INDEXTRUT quick nut. Stainless steel A2



METAL

CODE	SIZE	€/100		
TURXA208	M8	**151,443**	50	300

DIN-603 A2

Screw DIN-603. Round head screw with square neck. Stainless steel A2



METAL

CODE	SIZE	€/100		
D603I08016	M8 x 16	**42,047**	200	2.400

DIN-6921 A2

Screw DIN-6921. Hexagonal flanged bolt with serration. Stainless steel A2



METAL

CODE	SIZE	€/100	INSTALLATION KEY		
6921I08020	M8 x 20	**46,040**	13	200	2.400
6921I08050	M8 x 50	**87,807**	13	100	600
6921I08070	M8 x 70	**112,967**	13	100	600

DIN-6923 A2

DIN-6923 Hexagonal flange nut with serration. Stainless steel A2



METAL

CODE	SIZE	€/100	INSTALLATION KEY		
D6923IM08	M8	**22,833**	13	250	3.000
D6923IM10	M10	**38,510**	15	250	3.000
D6923IM12	M12	**65,500**	18	250	1.500

Connectors + Accessories for the solar structures assembly — ISF-CC NEW

METAL

CODE	SIZE	€/100		
D127IM08	M8	**4,530**	200	9.000
D127IM10	M10	**7,237**	100	4.500
D127IM12	M12	**10,923**	100	4.500

DIN-127 A2

Grower spring washer DIN-127. Stainless steel A2



Triangular structures for the solar panels installation — ISF-TR NEW

METAL

CODE	SIZE	VÁLDIO PARA	€/PC	
TPAR251500	25°/30°/35° - L.1500	PSE-A	**78,383**	4

TPA-R

Pre-assembled and adjustable aluminium triangle



METAL

CODE	SIZE	e (mm)	€/100	
TPAP352000	35 x 35 - L.2000	2	**2.107,607**	2

TPA-P

Strut profile for pre-assembled aluminium triangle



METAL

CODE	SIZE	SUITABLE FOR	€/PC	
TRPXS412515	25°-35° - L.1500	GP-XS	**76,967**	4

TRP-XS

Pre-assembled and adjustable triangle INDEXTRUT. Steel with Atlantis C4-M coating



METAL

CODE	SIZE	SUITABLE FOR	€/100		
NUXSM0841	M8	GP-XS	**706,420**	10	100

NU-XS

Articulated joint INDEXTRUT. Steel with Atlantis C4-M coating



NEW

ISF-FR

Adjustable accessories for solar panels installation

GS-TC

Adjustable roof hook for curved roof tile. Stainless steel A2



METAL

CODE	SIZE	€/100	
GSTC040080	40 - 80	**2.603,363**	20
GSTC080120	80 - 120	**2.662,000**	20

GS-TU

Adjustable roof hook for universal roof tile. Stainless steel A2



METAL

CODE	SIZE	€/100	
GSTU040055	40 - 55	**2.703,960**	20

STR

Adjustable support for trapezoidal roof. Stainless steel A2



METAL

CODE	SIZE	€/100	
STR1680	16 - 80	**1.763,737**	40

KFS-MA

Double threaded bolt kit. Stainless steel A2



METAL



Tile

CODE	SIZE	€/100	INSTALLATION KEY		
KFSMA10200	10 x 200	**555,310**	7	25	150
KFSMA10250	10 x 250	**620,117**	7	25	150

KFS-AU

Self-tapping screw kit. Stainless steel A2



METAL



Tile

CODE	SIZE	€/100	INSTALLATION KEY	
KFSAU10160	10 x 160	**1.680,417**	13	25
KFSAU10200	10 x 200	**2.028,090**	13	25

Adjustable accessories for solar panels installation — ISF-FR NEW

METAL | Tile | A2 INOX

CODE	SIZE	€/100	INSTALLATION KEY		
KFSRV10250	10 x 250	**613,933**	7	25	150
KFSRV12350	12 x 350	**1.080,440**	9	25	75

KFS-RV

Threaded rod kit for chemical anchor installation. Stainless steel A2



METAL | A2 INOX

CODE	SIZE	€/100		
PMO1012	M10 -M12	**248,343**	25	300

PMO

Plate for double threaded screw. Stainless steel A2



Direct fixing accessories for solar panels installation — ISF-FD NEW

METAL | Metal sheet | ATLANTIS

CODE	SIZE	€/100			
TACN165525	5,5 x 25 P16	**41,087**	8	500	2.000

TAC + ARVUL A2

Atlantis C4-M thin sheet screw + vulcanised EPDM-stainless steel A2 washer



METAL | Metal sheet | A2 INOX A

CODE	SIZE	€/100			
TACB166025	6 x 25 P16	**99,783**	8	500	2.000

TAC BIMETAL+ARVUL A2

Bi-metal thin sheet screw + vulcanised EPDM-stainless steel A2 washer



METAL | Metal sheet | Metal sheet - heavy profiles | Aluminium frames | AL

CODE	SIZE	€/100	DRILL Ø		
RETE5220	5,2 x 20	**90,753**	5,3	250	3.000

RE-TE

Watertight trebol rivet + vulcanised EPDM steel washer



NEW

ISF-ES

Sealing accessories for solar panel installation

ARS-P

Stainless steel A2 umbrella washer + EPDM



METAL

CODE	SIZE	€/100		
ARSP08	M8	**31,440**	100	1.200
ARSP10	M10	**31,440**	100	1.200

ARS-S

Washer for double threaded bolt



METAL

CODE	SIZE	€/100		
ARSS10	M10	**21,613**	100	1.200
ARSS12	M12	**21,613**	100	1.200

CS-B

Butylene adhesive sealing tape



METAL

CODE	SIZE	€/PC		
CSB0104010	40 x 1 - L.10	**18,413**	1	27
CSB0108010	80 x 1 - L.10	**35,983**	1	18

NEW

ISF-KT

Kits for solar installations

KC-PSA

Coplanar with winged aluminum profile (PSA-A). Direct fixing



METAL

CODE	SIZE	€/PC	
KCPSA0235	x2 (35 mm)	**187,973**	1
KCPSA0240	x2 (40 mm)	**188,817**	1
KCPSA0335	x3 (35 mm)	**270,703**	1
KCPSA0340	x3 (40 mm)	**271,547**	1

KC-PSD

Coplanar with winged aluminum profile (PSA-A). Direct fixing. Discontinuous profile format



METAL

CODE	SIZE	€/PC	
KCPSD0100	+1 (30-50)	**45,597**	1
KCPSD0135	x1 (35 mm)	**95,203**	1
KCPSD0140	x1 (40 mm)	**96,047**	1

Kits for solar installations ISF-KT NEW

METAL

KC-PSE

Coplanar with aluminium profile PSE-A. Assembled fixing



CODE	SIZE	€/PC	
KCPSE0235	x2 (35 mm)	225,967	1
KCPSE0240	x2 (40 mm)	226,807	1
KCPSE0335	x3 (35 mm)	332,327	1
KCPSE0340	x3 (40 mm)	333,170	1

METAL

KC-GPX

Coplanar with perforated steel channel Atlantis C4-M INDEXTRUT SOLAR GP-XS



CODE	SIZE	€/PC	
KCGPX0235	x2 (35 mm)	156,907	1
KCGPX0240	x2 (40 mm)	157,747	1
KCGPX0335	x3 (35 mm)	238,543	1
KCGPX0340	x3 (40 mm)	239,383	1

METAL

KC-GPD

Coplanar with perforated steel channel Atlantis C4-M. Discontinuous channel format



CODE	SIZE	€/PC	
KCGPD0100	+1 (30-50)	28,007	1
KCGPD0135	x1 (35 mm)	61,297	1
KCGPD0140	x1 (40 mm)	62,140	1

METAL

KT-PSE

Triangular with PSE-A aluminium profile. Assembled fixing



CODE	SIZE	€/PC	
KTPSE0235	x2 (35 mm)	426,220	1
KTPSE0240	x2 (40 mm)	427,060	1
KTPSE0335	x3 (35 mm)	634,583	1
KTPSE0340	x3 (40 mm)	635,423	1

METAL

KT-GPX

Triangular with perforated steel channel Atlantis C4-M INDEXTRUT SOLAR GP-XS



CODE	SIZE	€/PC	
KTGPX0235	x2 (35 mm)	343,013	1
KTGPX0240	x2 (40 mm)	343,853	1
KTGPX0335	x3 (35 mm)	517,703	1
KTGPX0340	x3 (40 mm)	518,547	1



QUICK BEAM ATTACHMENT SYSTEMS

SU

Quick beam attachament system

SU-MO

Beam clamp



02 P. 410 Technical info.

METAL | I-beam | kg. | ZINC

CODE	SIZE	€/100	MAX. BEAM WIDTH		
SUMOP09	PASANTE Ø9	**386,520**	20	50	150
SUMOP11	PASANTE Ø11	**424,970**	20	50	150
SUMOP13	PASANTE Ø13	**646,837**	25	50	100
SUMOM06	ROSCADO M6	**331,673**	20	50	200
SUMOM08	ROSCADO M8	**386,520**	20	50	200
SUMOM10	ROSCADO M10	**424,970**	20	50	150
SUMOM12	ROSCADO M12	**646,837**	25	50	-

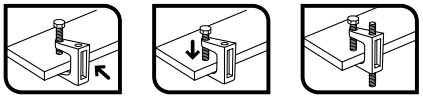

SU-CL

Suspension clip



02 P. 410 Technical info.

METAL | I-beam | kg. | PH PHOSPHATED

CODE	SIZE	€/100	MIN. BEAM LENGTH	BEAM THICKNESS		
SUCL02	6.3	**38,117**	14	1,5 - 4	100	1.200
SUCL04	6.3	**54,520**	23	4 - 10	100	400
SUCL10	6.3	**63,497**	23	10 - 15	100	300
SUCL15	6.3	**84,660**	23	15 - 20	100	300

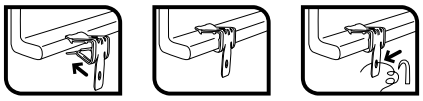

SU-VA

Rod clip



02 P. 411 Technical info.

METAL | I-beam | kg. | PH PHOSPHATED

CODE	SIZE	€/100	MIN. BEAM LENGTH	BEAM THICKNESS		
SUVA0602	M6	**97,870**	14	1,5 - 4	100	300
SUVA0604	M6	**119,217**	23	4 - 10	100	200
SUVA0610	M6	**175,370**	23	10 - 15	100	-
SUVA0615	M6	**211,657**	23	15 - 20	100	-
SUVA0804	M8	**119,217**	23	4 - 10	100	200
SUVA0810	M8	**175,370**	23	10 - 15	100	200
SUVA0815	M8	**211,657**	23	15 - 20	100	-
SUVA0802	M8	**97,870**	14	1,5 - 4	100	300

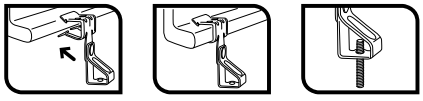

Quick beam attachament system SU

SU-CU

Holder clip

METAL | I-beam | kg. | PH PHOSPHATED

CODE	SIZE	€/100	BEAM THICKNESS		
SUCU0602	M6	**98,303**	1,5 - 5	100	300
SUCU0605	M6	**109,257**	5 - 7	100	300
SUCU0606	M6	**136,773**	3 - 7	100	200
SUCU0607	M6	**161,213**	7 - 10	100	200



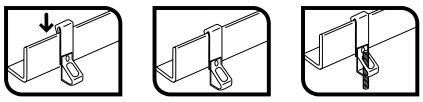

02 P. 411 Technical info.

SU-AB NEW

Beam clip for clamp

METAL | I-beam | kg. | ZINC

CODE	SIZE	€/100	THICKNESS MAX. FIXTURE	MAX. BEAM WIDTH	SCREW SIZE		
SUAB0603	M6	**92,911**	3 - 7	36,5	M6x9	100	300
SUAB0607	M6	**93,281**	7 - 13	36,5	M6x9	100	200
SUAB0614	M6	**97,185**	14 - 20	36,5	M6x9	100	200



02 P. 411 Technical info.

SU-CA NEW

Beam clip for cable

METAL | I-beam | kg. | ZINC

CODE	SIZE	€/100	THICKNESS MAX. FIXTURE		
SUCA0602	6-7	**32,125**	1 - 4	100	2.400
SUCA0604	6-7	**32,867**	4 - 7,5	100	1.200
SUCA0607	6-7	**33,375**	7,5 - 12	100	1.200
SUCA0802	8-9	**33,483**	1 - 4	100	1.200
SUCA0804	8-9	**34,000**	4 - 7,5	100	1.200
SUCA0807	8-9	**34,425**	7,5 - 12	100	1.200
SUCA1002	10-11	**34,158**	1 - 4	100	1.200
SUCA1004	10-11	**34,683**	4 - 7,5	100	1.200
SUCA1007	10-11	**35,142**	7,5 - 12	100	1.200
SUCA1202	12-14	**34,967**	1 - 4	100	1.200
SUCA1204	12-14	**35,475**	4 - 7,5	100	1.200
SUCA1207	12-14	**35,608**	7,5 - 12	100	1.200
SUCA1502	15-18	**35,725**	1 - 4	100	1.200
SUCA1504	15-18	**36,492**	4 - 7,5	100	1.200
SUCA1507	15-18	**36,642**	7,5 - 12	100	1.200
SUCA1902	19-24	**36,558**	1 - 4	100	1.200
SUCA1904	19-24	**44,300**	4 - 7,5	100	600
SUCA1907	19-24	**45,158**	7,5 - 12	100	600
SUCA2502	25-30	**45,533**	1 - 4	100	600
SUCA2504	25-30	**50,792**	4 - 7,5	100	600
SUCA2507	25-30	**55,617**	7,5 - 12	100	600



02 P. 411 Technical info.



THREADED ROD AND FIXING ACCESSORIES

RV Threaded rod

RV-ZN

Zinc-plated. 1 meter



METAL

CODE	SIZE	€/100	PITCH	
975ZM04	M4 x 1000	**115,343**	0,7	100
975ZM05	M5 x 1000	**153,790**	0,8	100
975ZM06	M6 x 1000	**150,373**	1	100
975ZM08	M8 x 1000	**262,817**	1,25	50
975ZM10	M10 x 1000	**396,090**	1,5	25
975ZM12	M12 x 1000	**615,293**	1,75	20
975ZM14	M14 x 1000	**845,333**	2	10
975ZM16	M16 x 1000	**1.082,177**	2	10
975ZM18	M18 x 1000	**1.518,877**	2,5	10
975ZM20	M20 x 1000	**1.929,363**	2,5	5
975ZM22	M22 x 1000	**2.605,157**	2,5	5
975ZM24	M24 x 1000	**2.751,817**	3	5
975ZM27	M27 x 1000	**3.178,493**	3	5
975ZM30	M30 x 1000	**4.200,437**	3,5	5
975ZM33	M33 x 1000	**5.168,790**	3,5	3
975ZM36	M36 x 1000	**6.111,487**	4	3

NEW RV-ZN 8.8

8.8, zinc-plated

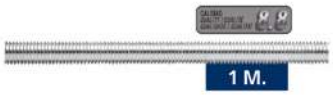

METAL

CODE	SIZE	€/100	METRIC	LENGTH	PITCH	
9758ZM05	M5 x 1000	**207,617**	M5	1.000	,8	100
9758ZM06	M6 x 1000	**213,537**	M6	1.000	1	100
9758ZM08	M8 x 1000	**367,940**	M8	1.000	1,25	50
9758ZM10	M10 x 1000	**554,530**	M10	1.000	1,5	25
9758ZM12	M12 x 1000	**830,640**	M12	1.000	1,75	20
9758ZM14	M14 x 1000	**1.141,207**	M14	1.000	2	10
9758ZM16	M16 x 1000	**1.406,827**	M16	1.000	2	10
9758ZM18	M18 x 1000	**1.944,157**	M18	1.000	2,5	5
9758ZM20	M20 x 1000	**2.430,997**	M20	1.000	2,5	5
9758ZM22	M22 x 1000	**3.282,487**	M22	1.000	2,5	5
9758ZM24	M24 x 1000	**3.439,773**	M24	1.000	3	5
9758ZM27	M27 x 1000	**3.941,337**	M27	1.000	3	5
9758ZM30	M30 x 1000	**5.124,530**	M30	1.000	3,5	5
9758ZM33	M33 x 1000	**6.202,553**	M33	1.000	3,5	3
9758ZM36	M36 x 1000	**7.333,787**	M36	1.000	4	3

RV-A2

A2 Stainless steel. 1 meter



STAINLESS STEEL

CODE	SIZE	€/100	PITCH	
975A2M04	M4 x 1000	**380,780**	0,7	1
975A2M05	M5 x 1000	**449,000**	0,8	1
975A2M06	M6 x 1000	**619,920**	1	1
975A2M08	M8 x 1000	**1.006,010**	1,25	1
975A2M10	M10 x 1000	**1.457,350**	1,5	1
975A2M12	M12 x 1000	**2.218,653**	1,75	1
975A2M14	M14 x 1000	**3.885,137**	2	1
975A2M16	M16 x 1000	**4.486,253**	2	1
975A2M18	M18 x 1000	**4.894,093**	2,5	1
975A2M20	M20 x 1000	**6.753,847**	2,5	1
975A2M22	M22 x 1000	**7.894,990**	2,5	1
975A2M24	M24 x 1000	**10.657,117**	3	1
975A2M27	M27 x 1000	**12.844,027**	3	1
975A2M30	M30 x 1000	**19.989,633**	3,5	1
975A2M33	M33 x 1000	**25.095,807**	3,5	1
975A2M36	M36 x 1000	**28.864,247**	4	1

Threaded rod — RV

METAL

RV-2M

Zinc-plated. 2 meters



CODE	SIZE	€/100	PITCH	
975ZM2M06	M6 x 2.000	**300,747**	1	50

Small threaded bolt — VR-SE

METAL



CODE	SIZE	€/100		
VRSE06020	M6 x 20	**12,153**	200	4.800
VRSE06030	M6 x 30	**17,090**	200	4.800
VRSE08020	M8 x 20	**15,893**	200	3.200
VRSE08030	M8 x 30	**21,287**	200	2.400
VRSE10030	M10 x 30	**31,257**	200	2.400
VRSE12030	M12 x 30	**64,071**	100	800

Self-Service

CODE	SIZE	€/BAG	PCS.	BAGS
LSVRSE06030	M6 x 30	**6,740**	30	8

Coupling nut — MA

METAL

MA-HE

Coupling nut. Hexagonal



CODE	SIZE	€/100	LENGTH		
MAE0620	M6 x 20	**19,803**	20	200	2.400
MAE0630	M6 x 30	**26,715**	30	200	1.600
MAE0825	M8 x 25	**21,640**	25	200	1.600
MAE1030	M10 x 30	**28,802**	30	150	900
MAE1235	M12 x 35	**67,211**	35	100	600
MAE1650	M16 x 50	**207,274**	50	50	100
MAE2060	M20 x 60	**565,844**	60	25	-

Blister

CODE	SIZE	€/BAG	PCS.	BAGS
BZMAE0630	M6 x 30	**2,565**	6	15
BZMAE0825	M8 x 25	**2,565**	6	15
BZMAE1030	M10 x 30	**2,565**	4	15

Window Box

CODE	SIZE	€/BOX	PCS.	BOXES
VMAE0630	M6 x 30	**7,171**	20	8
VMAE0825	M8 x 25	**5,788**	20	8
VMAE1030	M10 x 30	**6,068**	15	8

Self-Service

CODE	SIZE	€/BAG	PCS.	BAGS
LSMAE0630	M6 x 30	**12,429**	40	6
LSMAE0825	M8 x 25	**7,593**	30	5
LSMAE1030	M10 x 30	**6,736**	20	6

MA Coupling nut

MA-RE

Coupling nut. Round



METAL

CODE	SIZE	€/100	LENGTH		
MAR5322	5/32W x 20	**24,658**	20	200	4.800
MAR0420	M4 x 20	**16,542**	20	200	4.800
MAR0620	M6 x 20	**17,455**	20	200	2.400
MAR0630	M6 x 30	**25,929**	30	200	1.600
MAR0825	M8 x 25	**21,640**	25	200	2.400
MAR0830	M8 x 30	**26,838**	30	200	1.600
MAR1030	M10 x 30	**28,641**	30	150	900
MAR1235	M12 x 35	**48,393**	35	100	600
MAR1650	M16 x 50	**172,721**	50	50	300

Window Box

CODE	SIZE	€/BOX	PCS.	BOXES
VMAR0420	M4 x 20	**5,530**	25	8
VMAR0630	M6 x 30	**6,935**	20	8
VMAR0830	M8 x 30	**7,178**	20	8
VMAR1030	M10 x 30	**5,792**	15	8

Self-Service

CODE	SIZE	€/BAG	PCS.	BAGS
LSMAR0420	M4 x 20	**7,736**	40	8
LSMAR0630	M6 x 30	**12,134**	40	7
LSMAR0830	M8 x 30	**10,991**	35	5
LSMAR1030	M10 x 30	**6,759**	20	6

MA-RI

Coupling nut. Round. A2 Stainless steel



STAINLESS STEEL

CODE	SIZE	€/100	LENGTH	
MARI0830	M8 x 30	**207,170**	30	100
MARI1030	M10 x 30	**285,210**	30	100

MA-MH

Spacer nut Male/Female



METAL

CODE	SIZE	€/100	LENGTH		
MAMH0610	M6 x 10	**44,537**	10	100	3.000
MAMH0620	M6 x 20	**54,767**	20	100	1.200
MAMH0630	M6 x 30	**86,370**	30	100	1.200
MAMH0640	M6 x 40	**98,223**	40	100	1.000
MAMH0650	M6 x 50	**109,817**	50	50	1.000

AR-FO Forged eye bolt



METAL

CODE	SIZE	€/100	EYE BOLT Ø	THREAD LENGHT		
ARFOM06Z	M6 x 55	**81,027**	10	55	100	1.200
ARFOM08Z	M8 x 60	**108,623**	11.8	60	100	600
ARFOM10Z	M10 x 73	**153,213**	14.5	73	50	300
ARFOM12Z	M12 x 90	**295,803**	17	90	50	200
ARFOM16Z	M16 x 95	**666,417**	23.5	95	25	50

Forged hook bolt — GA-FO

METAL

CODE	SIZE	€/100	LENGTH	APERTURE HOOK	THREAD LENGHT		
GAFOM06Z	M6 x 55	**74,687**	82	8	55	100	1.200
GAFOM08Z	M8 x 60	**122,840**	98	10	60	100	600
GAFOM10Z	M10 x 73	**201,100**	116,5	12.5	73	50	300
GAFOM12Z	M12 x 90	**349,063**	146	16	90	50	100
GAFOM16Z	M16 x 95	**693,717**	170	19	95	25	50



Hook spiral — GE-SP

METAL

CODE	SIZE	€/100	THREAD LENGHT		
GESPM08ZE	M8 x 60	**145,190**	65	25	300
GESPM10ZE	M10 x 73	**161,370**	78	15	90



Threaded screw clamp and staple — TAG

AB-TA

Zinc-plated. Slotted

CODE	SIZE	€/100		
ABTA0630	M6 x 30	**5,350**	100	4.500
ABTA0640	M6 x 40	**6,420**	100	2.400
ABTA0650	M6 x 50	**7,253**	100	2.400
ABTA0730*	M7 x 30	**5,203**	100	2.400
ABTA0740*	M7 x 40	**6,420**	100	2.400
ABTA0750*	M7 x 50	**7,253**	100	2.400
ABTA0760*	M7 x 60	**12,557**	100	1.200
ABTA0770*	M7 x 70	**16,543**	100	1.200
ABTA0780*	M7 x 80	**18,177**	100	1.200
ABTA0840	M8 x 40	**8,917**	100	2.400
ABTA0860	M8 x 60	**11,890**	100	1.200
ABTA0880	M8 x 80	**17,073**	100	1.200
ABTA1050	M10 x 50	**19,990**	100	1.200
ABTA1070	M10 x 70	**25,547**	100	800
ABTA1090	M10 x 90	**31,833**	100	600

* Not include slot





02 P. 412 Technical info.

Self-Service

CODE	SIZE	€/BAG	PCS.	BAGS
LSABTA0630	M6 x 30	**2,723**	15	10
LSABTA0640	M6 x 40	**2,891**	15	10
LSABTA0650	M6 x 50	**3,068**	15	10
LSABTA0840	M8 x 40	**3,669**	15	10
LSABTA0860	M8 x 60	**4,015**	15	10

AB-TA B

Yellow zinc-plated. Slotted

CODE	SIZE	€/100		
ABTAB0630	M6 x 30	**5,350**	100	4.500
ABTAB0640	M6 x 40	**6,420**	100	2.400
ABTAB0650	M6 x 50	**7,253**	100	2.400

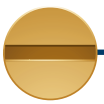



02 P. 412 Technical info.

Self-Service

CODE	SIZE	€/BAG	PCS.	BAGS
LSABTAB0630	M6 x 30	**2,723**	15	10
LSABTAB0640	M6 x 40	**2,891**	15	10
LSABTAB0650	M6 x 50	**3,068**	15	10

TAG

Threaded screw clamp and staple

AB-TA A2

A2 Stainless steel



02 P. 412 Technical info.

STAINLESS STEEL

CODE	SIZE	€/100		
ABTA20630	M6 x 30	**78,334**	100	2.400

AB-TR

Threaded screw for clamps



02 P. 412 Technical info.

CODE	SIZE	€/100		
ABTR05030	M5 x 30	**10,047**	100	2.400
ABTR05040	M5 x 40	**10,403**	100	2.400
ABTR05050	M5 x 50	**11,597**	100	2.400
ABTR05060	M5 x 60	**13,737**	100	1.200
ABTR06040	M6 x 40	**13,273**	100	2.400
ABTR06050	M6 x 50	**16,100**	100	1.200
ABTR06060	M6 x 60	**18,487**	100	1.200

AB-PM7

Cilindrical spacer for clamps M7



M7

CODE	SIZE	€/100		
ABPM720	20	**104,347**	50	2.250
ABPM730	30	**136,737**	50	2.250
ABPM740	40	**153,987**	50	1.200

AB-TG

Threaded screws for clips



02 P. 413 Technical info.

CODE	SIZE	€/100			
ABTG4530	4,5 x 30	**7,286**	PZ2	100	4.500
ABTG4535	4,5 x 35	**7,755**	PZ2	100	4.500
ABTG4540	4,5 x 40	**8,078**	PZ2	100	2.400
ABTG5030	5 x 30	**9,632**	PZ3	100	2.400
ABTG5040	5 x 40	**10,197**	PZ3	100	2.400

TM-VR

Screw Coupling nut for threaded rod



CODE	SIZE	€/100		
TMVR06065	6 x 65	**147,887**	50	1.200
TMVR07065	7 x 65	**154,937**	50	1.200
TMVR08065	8 x 65	**158,077**	50	1.200

Double threaded screw ES-DR

CODE	SIZE		€/100	MXL	SW*		
ESDR06040	M6 x 40	TX15	**10,903**	M6 x 40	-	100	3.000
ESDR06050	M6 x 50	TX15	**13,000**	M6 x 50	-	100	2.400
ESDR06060	M6 x 60	TX15	**15,010**	M6 x 60	-	100	2.400
ESDR06070	M6 x 70	TX15	**17,560**	M6 x 70	-	100	1.600
ESDR06080	M6 x 80	TX15	**19,653**	M6 x 80	-	100	1.600
ESDR08050	M8 x 50	TX25	**14,750**	M8 x 50	-	100	1.600
ESDR08060	M8 x 60	TX25	**17,913**	M8 x 60	-	100	800
ESDR08070	M8 x 70	TX25	**20,503**	M8 x 70	-	100	800
ESDR08080	M8 x 80	TX25	**23,030**	M8 x 80	6	100	800
ESDR08090	M8 x 90	TX25	**24,900**	M8 x 90	6	100	800
ESDR08100	M8 x 100	TX25	**26,693**	M8 x 100	6	100	800
ESDR08110	M8 x 110	TX25	**30,503**	M8 x 110	6	100	800
ESDR08120	M8 x 120	TX25	**37,830**	M8 x 120	6	100	800
ESDR08130	M8 x 130	TX25	**44,660**	M8 x 130	6	100	800
ESDR10080	M10 x 80	TX25	**35,700**	M10 x 80	8	100	800
ESDR10100	M10 x 100	TX25	**42,840**	M10 x 100	8	100	400
ESDR10110	M10 x 110	TX25	**47,737**	M10 x 110	8	100	400
ESDR10120	M10 x 120	TX25	**59,680**	M10 x 120	8	100	400
ESDR10130	M10 x 130	TX25	**73,353**	M10 x 130	8	100	400
ESDR10140	M10 x 140	TX25	**78,063**	M10 x 140	8	100	400
ESDR10150	M10 x 150	TX25	**82,613**	M10 x 150	8	100	400
ESDR10180	M10 x 180	TX25	**111,637**	M10 x 180	8	100	300
ESDR10200	M10 x 200	TX25	**124,113**	M10 x 200	8	100	200

Self-Service

CODE	SIZE	€/BAG	PCS.	BAGS
LSESDR06080	M6 x 80	**5,520**	25	7
LSESDR08060	M8 x 60	**5,659**	25	7
LSESDR08080	M8 x 80	**7,018**	25	6
LSESDR08100	M8 x 100	**8,273**	25	6
LSESDR08120	M8 x 120	**8,412**	20	6
LSESDR10080	M10 x 80	**7,951**	20	6
LSESDR10100	M10 x 100	**8,644**	18	6
LSESDR10120	M10 x 120	**9,138**	15	7

*SW: hexagon in the middle





ES-DR

Zinc-plated. Tx



02 P. 413 Technical info.

STAINLESS STEEL

CODE	SIZE	€/100		
ESDA208060	M8 x 60	**115,807**	100	800
ESDA210060	M10 x 60	**215,433**	100	800

ES-DA2

A2 Stainless steel. Tx



02 P. 413 Technical info.

AB-F Washer for clamps

AB-FP

Flat washer for clamps



CODE	SIZE	€/100		
ABFP25	25	**6,503**	100	2.400
ABFP32	32	**9,563**	100	2.400

AB-FC

Conical washer for clamps



CODE	SIZE	€/100		
ABFC09	9	**10,550**	100	2.400
ABFC14	14	**16,440**	100	1.200
ABFC19	19	**26,220**	100	1.200

PF Flat bar for fixation

PF-ZN

Zinc-plated

METAL



CODE	SIZE	€/100		
PFZNM0800	M8	**55,630**	100	600
PFZNM0810	M8+M10	**69,940**	100	600
PFZNM1000	M10	**67,283**	100	600

PF-A4

A4 Stainless steel

STAINLESS STEEL



CODE	SIZE	€/100		
PFA4M0800	M8	**303,137**	100	600
PFA4M0810	M8+M10	**361,303**	100	600
PFA4M1000	M10	**346,320**	100	600

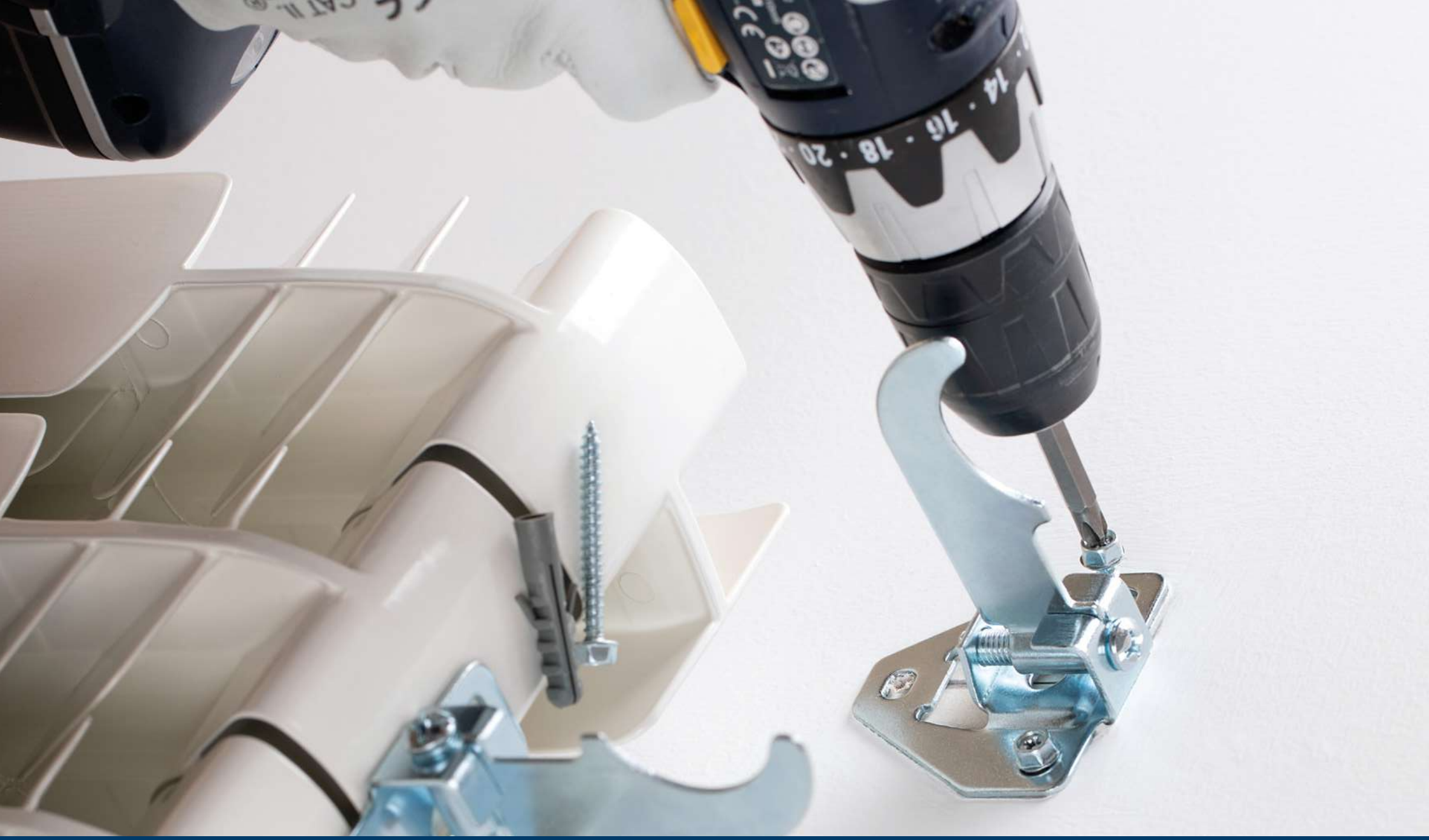

FIXINGS FOR BATHROOM FITTINGS AND AIR-CONDITIONING UNITS

RA Aluminium radiator supports

RA-TRG

Adjustable triangular support with anti vibrations rubber



2 PCS x KIT

ALSO AVAILABLE easykits

TN4S With multimaterial high-quality nylon plug

Stone | Hollow brick | Solid brick | Aerated concrete | Concrete | ZINC

CODE	SIZE	€/KIT	KITS X
RATRG095	95	4,496	50

RA-TRI

1" triangular support



Stone | Hollow brick | Solid brick | Aerated concrete | Concrete | ZINC

CODE	SIZE	€/100	KITS X
RATRI095	95	142,301	100

RA-FRE

Straight Ferroli support



2 PCS x KIT

TN4S With multimaterial high-quality nylon plug

Stone | Hollow brick | Solid brick | Aerated concrete | Concrete | ZINC

CODE	SIZE	€/KIT	KITS X
RAFRE095	95	4,324	50

RA-FIN

Inclined Ferroli support



2 PCS x KIT

TN4S With multimaterial high-quality nylon plug

Stone | Hollow brick | Solid brick | Aerated concrete | Concrete | ZINC

CODE	SIZE	€/KIT	KITS X
RAFIN100	100	4,571	50

Aluminium radiator supports RA

RA-RO

Roca support



2 PCS x KIT

Stone | Hollow brick | Solid brick | Aerated concrete | Concrete | ZINC

CODE	SIZE	€/KIT	KITS X
RARO100	100	**7,158**	50



RA-FEM

Ferroli support to recess



Stone | Hollow brick | Solid brick | Aerated concrete | Concrete | ZINC

CODE	SIZE	€/100	KITS X
RAFEM145	145	**125,190**	250
RAFEM175	175	**131,667**	250

RA-RAY

Rayco support



Stone | Hollow brick | Solid brick | Aerated concrete | Concrete | ZINC

CODE	SIZE	€/100	KITS X
RARAY032	32 x 78	**101,543**	250

RA-PES

Universal support



Stone | Hollow brick | Solid brick | Aerated concrete | Concrete | ZINC

CODE	SIZE	€/100	KITS X
RAPES032	32 x 78	**104,403**	250



easykits

- INCREASES CROSS-SELLING
- ATTRACTIVE VISUAL PACKAGING
- USEFUL INFORMATION ON PACKAGING
- SOLUTIONS FOR COMMON PRODUCTS

SA Sanitary fixings

SA-LN

Sanitary fixings with nylon nut



2 PCS x KIT

TN4S With multimaterial high-quality nylon plug

Stone | Hollow brick | Solid brick | Aerated concrete | Hollow concrete | Concrete | ZINC | NYLON

CODE	SIZE	€/KIT	KITS X
SALN08100	M8 x 100	2,120	50
SALN10120	M10 x 120	2,755	50

SA-LH

Sanitary fixings with iron nut



2 PCS x KIT

ALSO AVAILABLE easykits

TN4S With multimaterial high-quality nylon plug

Stone | Hollow brick | Solid brick | Aerated concrete | Hollow concrete | Concrete | ZINC | NYLON

CODE	SIZE	€/KIT	KITS X
SALH08100	M8 x 100	2,271	100
SALH10120	M10 x 120	3,009	50

SA-IL

Stainless steel WC and bidet fixing kit with long nylon plug



2 PCS x KIT

Stone | Hollow brick | Solid brick | Aerated concrete | Hollow concrete | Concrete | NYLON | A2 INOX

CODE	SIZE	€/KIT	KITS X
SAIL06080	M6 x 80	3,017	100

SA-WZ

WC and bidet fixing kit, zinc-plated



2 PCS x KIT

TN4S With multimaterial high-quality nylon plug

Stone | Hollow brick | Solid brick | Aerated concrete | Hollow concrete | Concrete | ZINC | NYLON

CODE	SIZE	€/KIT	KITS X
SAWZ05080	M5 x 80	1,250	300

SA-WL

WC and bidet fixing kit, brass



2 PCS x KIT

TN4S With multimaterial high-quality nylon plug

Stone | Hollow brick | Solid brick | Aerated concrete | Hollow concrete | Concrete | NYLON | BRASS

CODE	SIZE	€/KIT	KITS X
SAWL05080	M5 x 80	3,187	100

Sanitary fixings SA

SA-CI

Cistern fixing kit



2 PCS x KIT

ALSO AVAILABLE easykits

Stone | Hollow brick | Solid brick | Aerated concrete | Hollow concrete | Concrete | A2 INOX

CODE	SIZE	€/KIT	KITS X
SACI06080	M6 x 80	5,727	100

SA-WH

Horizontal WC fixing kit



2 PCS x KIT

Stone | Hollow brick | Solid brick | Aerated concrete | Hollow concrete | Concrete | ZINC | NYLON

CODE	SIZE	€/KIT	KITS X
SAWH06070	M6 x 70	2,184	50



TN4S With multimaterial high-quality nylon plug

SA-WHM

Horizontal multiposition fixing elements for WC



2 PCS x KIT

Stone | Hollow brick | Solid brick | Aerated concrete | Hollow concrete | Concrete | ZINC | NYLON

CODE	SIZE	€/KIT	KITS X
SAWHM06060	Ø6x60	5,458	50



TN4S With multimaterial high-quality nylon plug

SA-TE TB

Fixing elements for boilers and heaters. Screw





2 PCS x KIT

Stone | Hollow brick | Solid brick | Aerated concrete | Hollow concrete | Concrete | ZINC | NYLON

CODE	SIZE	€/100	KITS X
SATEB0860	Ø8x60	125,757	50
SATEB1080	Ø10x80	222,700	50



TN4S With multimaterial high-quality nylon plug

SA-TE AL

Fixing elements for boilers and heaters. Hook screw





2 PCS x KIT

Stone | Hollow brick | Solid brick | Aerated concrete | Hollow concrete | Concrete | ZINC | NYLON

CODE	SIZE	€/100	KITS X
SATEA0865	Ø8x65	119,917	50
SATEA1075	Ø10x75	168,137	50



TN4S With multimaterial high-quality nylon plug

CO

Kit for air-conditioning sets

CO-SO

Kit for air-conditioning sets



2 PCS x KIT

CODE	SIZE	€/KIT	KITS X
COSO15400	1,5 x 400	**32,848**	1
COSO15450	1,5 x 450	**35,757**	1
COSO15500	1,5 x 500	**44,049**	1
COSO20400	2 x 400	**49,933**	1
COSO20450	2 x 450	**53,778**	1
COSO20500	2 x 500	**54,947**	1



Ø 8 / Ø 10

Recomendded to be installed with T-NUX PAG. 92

CO-KS

Silent block support kit for AC



4 PCS x KIT

CODE	SIZE	€/KIT	KITS X
COKS08060	M8 x 60	**7,410**	1



EASYKITS

easy kits

EK Fencing accesories

EKMULCAN

Clamp post



MULTI-MATERIAL

CODE	CONTENT	SIZE CONTENT	PCS X BAG	€/BAG	MINIMUM UNITS SALE
EKMULCAN	TCCA05050	5 x 50 Ø5	8	5,401	12
	BROCA GRATIS	5 x 85	1		

EKMULFAE

Screw tighten clamp



MULTI-MATERIAL

CODE	CONTENT	SIZE CONTENT	PCS X BAG	€/BAG	MINIMUM UNITS SALE
EKMULFAE	TN4S06	6 x 30 Ø6	4	5,401	12
	TPA240050	4 x 50	4		
	BROCA GRATIS	6 x 100	1		

EKMULTEN

Screw tighten clamp



MULTI-MATERIAL

CODE	CONTENT	SIZE CONTENT	PCS X BAG	€/BAG	MINIMUM UNITS SALE
EKMULTEN	TN4S08	8 x 40 Ø8	4	7,655	12
	TBA206050	6 x 50	4		
	125IM06	M6	4		
	BROCA GRATIS	8 x 120	1		

EKMULAC

Screw tighten clamp



MULTI-MATERIAL

CODE	CONTENT	SIZE CONTENT	PCS X BAG	€/BAG	MINIMUM UNITS SALE
EKMULAC	TNUXE10080	10 x 80 Ø10	4	5,409	12
	TN4S06	6 x 30 Ø6	4		
	D12505	M5	4		
	T8142038	4,2 x 38	4		

EKMULTOL

Screw tighten clamp



MULTI-MATERIAL

CODE	CONTENT	SIZE CONTENT	PCS X BAG	€/BAG	MINIMUM UNITS SALE
EKMULTOL	TNUXE08080	8 x 80 Ø8	4	7,655	12
	BROCA GRATIS	8 x 120	1		

MULTI-MATERIAL

EKMULCAL

Screw tighten clamp



CODE	CONTENT	SIZE CONTENT	PCS X BAG	€/BAG	MINIMUM UNITS SALE
EKMULCAL	TN4S10	10 x 50 Ø10	2	7,655	12
	TB06060	4 x 50	2		
	ALRO22100	22x100 (6 x 79 x 23)	2		
	BROCA GRATIS	10 x 120	1		

MULTI-MATERIAL

EKMULAV

Screw tighten clamp



CODE	CONTENT	SIZE CONTENT	PCS X BAG	€/BAG	MINIMUM UNITS SALE
EKMULAV08	SALH08100	M8 x 100	2	7,655	12
	BROCA GRATIS	8 x 120	11		
EKMULAV10	SALH10120	M10 x 120	2	11,478	12
	BROCA GRATIS	10 x 120	1		

MULTI-MATERIAL

EKMULCIS

Screw tighten clamp



CODE	CONTENT	SIZE CONTENT	PCS X BAG	€/BAG	MINIMUM UNITS SALE
EKMULCIS	SACI06080	M6 x 80	2	11,478	12

MULTI-MATERIAL

EKMULWCB

Screw tighten clamp



CODE	CONTENT	SIZE CONTENT	PCS X BAG	€/BAG	MINIMUM UNITS SALE
EKMULWCB	SAWZ05080	M5 x 80	2	7,655	12
	BROCA GRATIS	8 x 120	1		

MULTI-MATERIAL

EKMULRAD

Screw tighten clamp



CODE	CONTENT	SIZE CONTENT	PCS X BAG	€/BAG	MINIMUM UNITS SALE
EKMULRAD	RATRG095	95	2	14,348	12
	BROCA GRATIS	8 x 120	1		

EK Fencing accesories

EKMULROB

Screw tighten clamp



MULTI-MATERIAL

CODE	CONTENT	SIZE CONTENT	PCS X BAG	€/BAG	MINIMUM UNITS SALE
EKMULROB	TN4S10	10 x 50 Ø10	4	8,190	12
	INVN7070	7 x 70	4		
	BROCA GRATIS	10 x 120	1		

EKMACILU

Screw tighten clamp



SOLID

CODE	CONTENT	SIZE CONTENT	PCS X BAG	€/BAG	MINIMUM UNITS SALE
EKMACILU	TN4S06	6 x 30 Ø6	4	5,401	12
	TPPOZ40045	4 x 45	4		
	ALRO18050	18x50 (3,7 x 37 x 15)	4		
	BROCA GRATIS	6 x 100	1		

EKHUEILU

Screw tighten clamp



HOLLOWS

CODE	CONTENT	SIZE CONTENT	PCS X BAG	€/BAG	MINIMUM UNITS SALE
EKHUEILU	TAPLANY	15 x 33	4	5,401	12
	TPPOZ45045	4,5 x 45	4		
	ALRO19050	19x50 (4,4 x 37 x 15)	4		

EKMACFTP

Screw tighten clamp



SOLID

CODE	CONTENT	SIZE CONTENT	PCS X BAG	€/BAG	MINIMUM UNITS SALE
EKMACFTP	TN4S10	10 x 50 Ø10	4	7,655	12
	TB06060	6 x 60	4		
	D12506	M6	4		
	BROCA GRATIS	10 x 120	1		

EKHUEFTP

Screw tighten clamp



HOLLOWS

CODE	CONTENT	SIZE CONTENT	PCS X BAG	€/BAG	MINIMUM UNITS SALE
EKHUEFTP	BAESM06	M6 Ø16	4	7,655	12

EKMACFTL

Screw tighten clamp



SOLID

CODE	CONTENT	SIZE CONTENT	PCS X BAG	€/BAG	MINIMUM UNITS SALE
EKMACFTL	TN4S06	6 x 30 Ø6	4	5,401	12
	TPPOZ40040	4 x 40	4		
	BROCA GRATIS	6 x 100	1		

HOLLOWS

EKHUEFTL

Screw tighten clamp



CODE	CONTENT	SIZE CONTENT	PCS X BAG	€/BAG	MINIMUM UNITS SALE
EKHUEFTL	BAESM04	M4 Ø14	2	5,401	12

SOLID

EKMACFTG

Screw tighten clamp



CODE	CONTENT	SIZE CONTENT	PCS X BAG	€/BAG	MINIMUM UNITS SALE
EKMACFTG	TN4S06	6 x 30 Ø6	4	5,401	12
	ALHA19070	19x70 (4,4 x 41 x 15)	4		
	BROCA GRATIS	6 x 100	1		

HOLLOWS

EKHUEFTG

Screw tighten clamp



CODE	CONTENT	SIZE CONTENT	PCS X BAG	€/BAG	MINIMUM UNITS SALE
EKHUEFTG	BAGAM06	10 x 80 Ø10	2	5,401	12

MULTI-MATERIAL

EKMULFAP

Screw tighten clamp



CODE	CONTENT	SIZE CONTENT	PCS X BAG	€/BAG	MINIMUM UNITS SALE
EKMULFAP	TN4S08	8 x 40 Ø8	4	7,655	12
	TPPOZ05050	5 x 50	4		
	ALRO19050	19x50 (4,4 x 37 x 15)	4		
	BROCA GRATIS	8 x 120	1		

MULTI-MATERIAL

EKMULFAL

Screw tighten clamp



CODE	CONTENT	SIZE CONTENT	PCS X BAG	€/BAG	MINIMUM UNITS SALE
EKMULFAL	TN4S05	5 x 25 Ø5	4	5,401	12
	TPPOZ35030	3,5 x 30	4		
	ALRO17040	17x40 (3,5 x 29 x 13)	4		
	BROCA GRATIS	5 x 85	1		



STAINLESS RANGE

INOX

MT

Anclaje macho para cargas altas en hormigón fisurado y no fisurado

NEW MTP-A4

Opt.1 ETA Assessed. A4 Stainless steel shaft. A4 Stainless steel clip



02 P. 341 Technical info.

STAINLESS STEEL

Stone | Reinforced concrete | Concrete | Cracked concrete

CODE	SIZE	€/100	THICKNESS MAX. FIXTURE	AXIX LETTER (LENGTH)		
APA408075	M8 x 75 Ø8	**364,020**	9	C	100	600
APA408095	M8 x 95 Ø8	**411,667**	29	E	100	600
APA408115	M8 x 115 Ø8	**539,780**	49	G	100	400
APA408135	M8 x 135 Ø8	**624,493**	69	H	50	300
APA410090	M10 x 90 Ø10	**641,667**	10	E	100	400
APA410105	M10 x 105 Ø10	**686,170**	25	F	50	300
APA410115	M10 x 115 Ø10	**755,890**	35	G	50	300
APA410135	M10 x 135 Ø10	**906,770**	55	H	50	300
APA410165	M10 x 165 Ø10	**1.082,000**	85	K	50	100
APA410185	M10 x 185 Ø10	**1.157,987**	105	L	50	100
APA412110	M12 x 110 Ø12	**931,650**	14	F	50	200
APA412120	M12 x 120 Ø12	**999,500**	24	G	50	200
APA412130	M12 x 130 Ø12	**1.085,333**	34	H	50	200
APA412150	M12 x 150 Ø12	**1.268,333**	54	I	50	100
APA412180	M12 x 180 Ø12	**1.403,000**	84	L	50	150
APA412200	M12 x 200 Ø12	**1.477,703**	104	M	50	100
APA416125	M16 x 125 Ø16	**1.918,000**	8	G	50	100
APA416145	M16 x 145 Ø16	**2.152,667**	28	I	25	100
APA416175	M16 x 175 Ø16	**2.819,333**	58	K	25	50
APA416190	M16 x 190 Ø16	**2.919,667**	73	L	25	50
APA416220	M16 x 220 Ø16	**3.109,720**	103	O	20	40
APA420200	M20 x 200 Ø20	**4.798,200**	62	M	20	40
APA420240	M20 x 240 Ø20	**5.507,167**	102	P	15	30
APA420285	M20 x 285 Ø20	**6.478,589**	147	S	10	20



MTH-A4

Opt.7 ETA Assessed. A4 Stainless steel shaft. A4 Stainless steel clip



02 P. 344 Technical info.

STAINLESS STEEL

Stone | Reinforced concrete | Concrete

CODE	SIZE	€/100	THICKNESS MAX. FIXTURE	AXIX LETTER (LENGTH)		
•• MIA406045	M6 x 45 Ø6	**198,050**	1	A	200	1.200
• MIA406060	M6 x 60 Ø6	**215,763**	2	B	200	1.200
• MIA406080	M6 x 80 Ø6	**229,800**	22	D	200	1.200
• MIA408050	M8 x 50 Ø8	**238,740**	4	A	100	800
MIA408075	M8 x 75 Ø8	**253,527**	5	C	100	600
MIA408090	M8 x 90 Ø8	**282,907**	20	E	100	600
MIA408115	M8 x 115 Ø8	**371,653**	45	G	100	400
MIA410070	M10 x 70 Ø10	**415,217**	3	C	100	400
MIA410090	M10 x 90 Ø10	**470,627**	10	D	100	400
MIA410120	M10 x 120 Ø10	**572,090**	40	G	50	300
MIA410150	M10 x 150 Ø10	**811,337**	70	I	50	200
• MIA412075	M12 x 75 Ø12	**620,927**	5	C	50	300
MIA412090	M12 x 90 Ø12	**625,313**	13	D	50	200
MIA412110	M12 x 110 Ø12	**684,030**	12	F	50	200
MIA412140	M12 x 140 Ø12	**820,253**	42	I	50	200
• MIA416090	M16 x 90 Ø16	**1.483,607**	4	D	25	150
MIA416145	M16 x 145 Ø16	**1.832,207**	23	I	25	100
MIA416170	M16 x 170 Ø16	**2.115,780**	48	K	25	75
• MIA420120	M20 x 120 Ø20	**2.459,464**	5	G	20	40
MIA420170	M20 x 170 Ø20	**3.361,992**	23	K	20	40
MIA420220	M20 x 220 Ø20	**4.185,353**	73	O	20	40





• Non-approved sizes
• Non-assessed sizes for Fire Resistence

Window Box

CODE	SIZE	€/BOX	PCS.	BOXES
VMIA408075	M8 x 75 Ø8	**34,754**	10	8
VMIA410090	M10 x 90 Ø10	**47,562**	8	8
VMIA412110	M12 x 110 Ø12	**54,416**	6	8

Self-Service

CODE	SIZE	€/BAG	PCS.	BAGS
LSMIA408075	M8 x 75 Ø8	**38,350**	12	7
LSMIA410090	M10 x 90 Ø10	**50,066**	8	7
LSMIA412110	M12 x 110 Ø12	**54,502**	6	5

Through bolt anchor for heavy loads in cracked & uncracked concrete

MT

STAINLESS STEEL


Stone | Reinforced concrete | Concrete

MTH-A2

Opt.7 ETA Assessed. A2 Stainless steel shaft. A2 Stainless steel clip



02 P. 344 Technical info.

CODE	SIZE	€/100	THICKNESS MAX. FIXTURE	AXIX LETTER (LENGTH)		
•• MI06045	M6 x 45 Ø6	**161,603**	1	A	200	1.200
• MI06060	M6 x 60 Ø6	**181,233**	2	B	200	1.200
• MI06080	M6 x 80 Ø6	**189,553**	22	D	200	1.200
• MI06120	M6 x 120 Ø6	**226,723**	62	G	100	600
• MI06140	M6 x 140 Ø6	**286,957**	82	I	100	600
• MI06160	M6 x 160 Ø6	**321,420**	102	J	100	400
• MI06170	M6 x 170 Ø6	**360,995**	112	K	100	400
• MI06180	M6 x 180 Ø6	**391,449**	122	L	100	300
• MI08050	M8 x 50 Ø8	**195,990**	4	A	100	800
MI08075	M8 x 75 Ø8	**214,680**	5	C	100	600
MI08090	M8 x 90 Ø8	**244,303**	20	E	100	600
MI08115	M8 x 115 Ø8	**316,020**	45	G	100	400
MI10070	M10 x 70 Ø10	**332,170**	3	C	100	400
MI10090	M10 x 90 Ø10	**371,820**	10	D	100	400
MI10120	M10 x 120 Ø10	**435,813**	40	G	50	300
MI10150	M10 x 150 Ø10	**610,167**	70	I	50	200
• MI12075	M12 x 75 Ø12	**503,667**	5	C	50	300
MI12090	M12 x 90 Ø12	**504,820**	13	D	50	200
MI12110	M12 x 110 Ø12	**546,373**	18	F	50	200
MI12140	M12 x 140 Ø12	**684,810**	48	I	50	200
• MI16090	M16 x 90 Ø16	**1.223,710**	4	D	25	150
MI16145	M16 x 145 Ø16	**1.428,494**	23	I	25	100
MI16170	M16 x 170 Ø16	**1.566,360**	48	K	25	75
• MI20120	M20 x 120 Ø20	**1.957,302**	5	G	20	40
MI20170	M20 x 170 Ø20	**2.432,095**	23	K	20	40
MI20220	M20 x 220 Ø20	**3.141,695**	73	O	20	40

• Non-approved sizes
• Non-assessed sizes for Fire Resistence



Blister

CODE	SIZE	€/BAG	PCS.	BAGS
BZMI08075	M8 x 75 Ø8	**4,622**	2	12
BZMI10090	M10 x 90 Ø10	**4,622**	2	10

Window Box

CODE	SIZE	€/BOX	PCS.	BOXES
VMI08075	M8 x 75 Ø8	**31,479**	10	8
VMI08090	M8 x 90 Ø8	**33,657**	10	8
VMI10070	M10 x 70 Ø10	**34,779**	8	8
VMI10090	M10 x 90 Ø10	**38,931**	8	8
VMI10120	M10 x 120 Ø10	**34,224**	6	8
VMI12110	M12 x 110 Ø12	**42,459**	6	8

Self-Service

CODE	SIZE	€/BAG	PCS.	BAGS
LSMI08075	M8 x 75 Ø8	**31,948**	12	7
LSMI08090	M8 x 90 Ø8	**36,352**	12	7
LSMI10070	M10 x 70 Ø10	**39,130**	10	6
LSMI10090	M10 x 90 Ø10	**38,931**	8	6
LSMI10120	M10 x 120 Ø10	**41,070**	8	6
LSMI12110	M12 x 110 Ø12	**42,459**	6	6

SOLID

DO-MT

Setting tool for MT family



CODE	SIZE	€/PC		
DOMTA10	M6 - M8 - M10	**13,097**	5	225
DOMTA20	M12 - M14 - M16 - M20	**21,831**	5	225

CH

Anti-spin sleeve anchor, for medium loads

CH-A2

A2 Stainless steel. Opt.7 ETA Assessed



02 P. 351 Technical info.

STAINLESS STEEL

Solid brick | Stone | Concrete | Reinforced concrete

CODE	SIZE	€/100		
ACHTA208C	M6 x 45 Ø8	108,713	100	1.200
ACHTA208L	M6 x 60 Ø8	122,817	100	600
•ACHTA209C	M6 x 45 Ø9	123,027	100	1.200
•ACHTA209L	M6 x 60 Ø9	142,097	100	600
ACHTA210C	M8 x 60 Ø10	176,140	100	600
ACHTA210L	M8 x 80 Ø10	202,623	100	400
•ACHTA211C	M8 x 60 Ø11	211,907	100	400
•ACHTA211L	M8 x 80 Ø11	249,623	100	400
ACHTA212C	M10 x 70 Ø12	297,137	100	200
ACHTA212L	M10 x 100 Ø12	363,387	50	200
•ACHTA214C	M10 x 70 Ø14	395,263	100	300
•ACHTA214L	M10 x 100 Ø14	440,873	50	200
ACHTA216C	M12 x 80 Ø16	585,907	50	100
ACHTA216L	M12 x 110 Ø16	741,410	50	100
ACHTA220C	M16 x 110 Ø20	1.522,157	25	75

• Non-approved sizes

Blister

CODE	SIZE	€/BAG	PCS.	BAGS
BZACHTA208C	M6 x 45 Ø8	4,622	2	15
BZACHTA208L	M6 x 60 Ø8	4,622	2	15
BZACHTA210C	M8 x 60 Ø10	4,622	2	15
BZACHTA210L	M8 x 80 Ø10	4,622	2	15

Window Box

CODE	SIZE	€/BOX	PCS.	BOXES
VACHTA208C	M6 x 45 Ø8	13,641	10	8
VACHTA208L	M6 x 60 Ø8	15,859	10	8
VACHTA210C	M8 x 60 Ø10	14,204	6	8
VACHTA210L	M8 x 80 Ø10	16,912	6	8
VACHTA212C	M10 x 70 Ø12	15,938	4	8
VACHTA212L	M10 x 100 Ø12	19,673	4	8

Self-Service

CODE	SIZE	€/BAG	PCS.	BAGS
LSACHTA208C	M6 x 45 Ø8	14,734	12	6
LSACHTA208L	M6 x 60 Ø8	17,128	12	6
LSACHTA210C	M8 x 60 Ø10	17,044	8	6
LSACHTA210L	M8 x 80 Ø10	20,293	8	6
LSACHTA212C	M10 x 70 Ø12	21,519	6	6
LSACHTA212L	M10 x 100 Ø12	19,673	4	5

CH-PI

A2 Stainless steel flat head screw. Opt.7 ETA Assessed



02 P. 352 Technical info.

STAINLESS STEEL

Solid brick | Stone | Concrete | Reinforced concrete

CODE	SIZE	€/100			
ACHTPI08C	M6 x 45 Ø8	116,590	4	100	1.200
ACHTPI08L	M6 x 60 Ø8	149,287	4	100	1.200
ACHTPI10C	M8 x 60 Ø10	219,947	5	100	600
ACHTPI10L	M8 x 80 Ø10	260,373	5	100	400
ACHTPI12C	M10 x 70 Ø12	347,790	6	50	300
ACHTPI12L	M10 x 100 Ø12	410,607	6	50	300

CH-GF A2

A2 Stainless steel forged hook bolt



02 P. 353 Technical info.

STAINLESS STEEL

Solid brick | Stone | Concrete | Reinforced concrete

CODE	SIZE	€/100	APERTURE HOOK		
ACHGA208C	M6 x 45 Ø8	414,233	10	100	600
ACHGA210C	M8 x 60 Ø10	615,310	11	100	400
ACHGA212C	M10 x 70 Ø12	857,143	14	50	200

Anti-spin sleeve anchor, for medium loads — CH

STAINLESS STEEL

Solid brick · Stone · Concrete · Reinforced concrete

CODE	SIZE	€/100	EYE BOLT Ø		
ACHAA208C	M6 x 45 Ø8	**454,853**	10	100	600
ACHAA210C	M8 x 60 Ø10	**725,567**	11	100	400
ACHAA212C	M10 x 70 Ø12	**986,037**	14	50	200

CH-AF A2

A2 Stainless steel forged eye bolt



02 P. 353 Technical info.

Drop-in anchor with internal thread for heavy loads — HE

STAINLESS STEEL

Stone · Reinforced concrete · Concrete

CODE	SIZE	€/100	LENGTH		
HEA4M06	M6 x 25 Ø8	**110,967**	25	100	4.000
HEA4M08	M8 x 30 Ø10	**158,223**	30	100	2.200
HEA4M10	M10 x 40 Ø12	**237,783**	40	50	1.000
HEA4M12	M12 x 50 Ø15	**473,433**	50	50	600
HEA4M16	M16 x 65 Ø20	**1.057,930**	65	25	250
HEA4M20	M20 x 80 Ø25	**1.932,287**	80	25	100

HE-A4

A4 Stainless steel. ETA Assessed for non-structural applications



02 P. 354 Technical info.

STAINLESS STEEL

Stone · Reinforced concrete · Concrete

CODE	SIZE	€/100	LENGTH		
HEC4M06	M6 x 25 Ø8	**152,948**	25	100	3.200
HEC4M08	M8 x 30 Ø10	**218,993**	30	100	1.600
HEC4M10	M10 x 40 Ø12	**338,341**	40	50	800
HEC4M12	M12 x 50 Ø15	**608,319**	50	50	400

HE-C4 NEW

With collar. A4 Stainless steel. ETA Assessed for non-structural applications



02 P. 354 Technical info.

Winged steel anchor for heavy-duty fixings — AC

STAINLESS STEEL

Solid brick · Stone · Concrete · Reinforced concrete

CODE	SIZE	€/100	SHIELD LENGHT		
AACCI06	M6 x 40 Ø10	**464,670**	40	50	1.200
AACCI08	M8 x 50 Ø14	**842,543**	50	50	600
AACCI10	M10 x 60 Ø16	**942,803**	60	25	300
AACCI12	M12 x 80 Ø20	**1.744,203**	80	10	120

AC-CI

A4 Stainless steel shield



02 P. 357 Technical info.

HI

Anti-spin sleeve anchor, for heavy-duty loads

HI-CI

A2 Stainless steel shield



02 P. 358 Technical info.

STAINLESS STEEL

Solid brick | Stone | Concrete | Reinforced concrete

CODE	SIZE	€/100	SHIELD LENGHT		
AHICI0645	M6 x 45 Ø12	**600,255**	40	100	600
AHICI0855	M8 x 55 Ø14	**843,040**	48	50	600
AHICI1065	M10 x 65 Ø16	**1.125,520**	59	50	300

AV

Screw anchor for ventilated façades

AVR

Threaded



STAINLESS STEEL

Stone | Hollow brick | Solid brick | Aerated concrete | Hollow concrete | Reinforced concrete | Concrete

CODE	SIZE	€/100		
AVR08120	M8 x 120 Ø8	**311,053**	100	600
AVR08150	M8 x 150 Ø8	**344,967**	100	600
AVR10120	M10 x 120 Ø10	**388,977**	100	400
AVR10150	M10 x 150 Ø10	**445,140**	100	200
AVR10180	M10 x 180 Ø10	**495,263**	100	200

AVC

Corrugated



STAINLESS STEEL

Stone | Hollow brick | Solid brick | Aerated concrete | Hollow concrete | Reinforced concrete | Concrete

CODE	SIZE	€/100		
AVC08120	8 x 120 Ø8	**335,017**	100	600
AVC08150	8 x 150 Ø8	**375,020**	100	600
AVC10120	10 x 120 Ø10	**428,867**	100	400
AVC10150	10 x 150 Ø10	**491,217**	100	200
AVC10180	10 x 180 Ø10	**554,563**	100	200

EQ

Stud bolt for chemical anchor, with nut and washer

EQ-A2

A2 Stainless steel



CHEMICAL

Reinforced concrete | Stone | Hollow brick | Solid brick | Aerated concrete | Hollow concrete | Concrete

CODE	SIZE	€/100		
EQA208110	M8 x 110	**310,533**	10	240
EQA210130	M10 x 130	**513,190**	10	120
EQA212160	M12 x 160	**850,517**	10	120
EQA216190	M16 x 190	**1.762,247**	10	40
EQA220260	M20 x 260	**3.368,117**	6	12
EQA224300	M24 x 300	**5.382,437**	6	12
EQA230330	M30 x 330	**9.820,060**	6	12

Stud bolt for chemical anchor, with nut and washer — EQ

CHEMICAL

CODE	SIZE	€/100	Reinforced concrete	Stone	Hollow brick	Solid brick	Aerated concrete	Hollow concrete	Concrete
EQA408110	M8 x 110	**356,573**	10						240
EQA410130	M10 x 130	**647,677**	10						120
EQA412160	M12 x 160	**1.114,120**	10						120
EQA416190	M16 x 190	**2.297,417**	10						40
EQA420260	M20 x 260	**5.313,967**	6						12
EQA424300	M24 x 300	**8.758,463**	6						12
EQA430330	M30 x 330	**15.449,990**	6						12

EQ-A4

A4 Stainless steel



Universal high performance nylon plug — T-NUX

STAINLESS STEEL

CODE	SIZE	€/100	Stone	Hollow brick	Cracked concrete	Solid brick	Aerated concrete	Hollow concrete	Concrete	THICKNESS MAX. FIXTURE	kg.	Ny NYLON	A4 INOX
TNXA408080	8 x 80 Ø8	**264,814**								10	50		600
TNXA408100	8 x 100 Ø8	**319,321**								30	50		600
TNXA408120	8 x 120 Ø8	**394,477**								50	50		300
TNXA410080	10 x 80 Ø10	**337,061**								10	50		300
TNXA410100	10 x 100 Ø10	**402,435**								30	50		300
TNXA410120	10 x 120 Ø10	**468,663**								50	50		300
TNXA410140	10 x 140 Ø10	**555,749**								70	50		300

T-NUX A A4

A4 Stainless steel. Countersunk head. ETA Assessed



02 P. 364 Technical info.

NON STRUCTURAL FIXINGS

STAINLESS STEEL

CODE	SIZE	€/100	Stone	Hollow brick	Cracked concrete	Solid brick	Aerated concrete	Hollow concrete	Concrete	TX	H	THICKNESS MAX. FIXTURE	kg.	Ny NYLON	A4 INOX
TNXE408080	8 x 80 Ø8	**371,738**								TX30	H10	10	50		600
TNXE408100	8 x 100 Ø8	**440,603**								TX30	H10	30	50		300
TNXE410080	10 x 80 Ø10	**493,074**								TX40	H13	10	50		300
TNXE410100	10 x 100 Ø10	**514,943**								TX40	H13	30	50		300
TNXE410120	10 x 120 Ø10	**618,968**								TX40	H13	50	50		300
TNXE410140	10 x 140 Ø10	**722,024**								TX40	H13	70	50		200

T-NUX E A4

A4 Stainless steel. Hexagonal head. ETA Assessed



02 P. 364 Technical info.

NON STRUCTURAL FIXINGS

Polyamide 6.6 Hammerfix plug. Preassembled saw-tooth screw — TC

STAINLESS STEEL

CODE	SIZE	€/100	Stone	Hollow brick	Adobe Brick	Solid brick	Aerated concrete	Hollow concrete	Concrete	TX	THICKNESS MAX. FIXTURE	kg.	Ny NYLON	A2 INOX
TCA205030	5 x 30 Ø5	**38,072**								PZ2	5	100		2.400
TCA206040	6 x 40 Ø6	**52,017**								PZ2	10	100		1.200
TCA206060	6 x 60 Ø6	**64,710**								PZ2	30	100		1.200
TCA208060	8 x 60 Ø8	**101,847**								PZ3	20	100		600
TCA208080	8 x 80 Ø8	**119,480**								PZ3	40	100		600
TCA208100	8 x 100 Ø8	**157,150**								PZ3	60	100		600

TC-A2

Countersunk plug and A2 stainless steel screw



02 P. 366 Technical info.

DIN-7504-K Self-drilling screw with hexagonal head

DIN-7504-K A2

Screw. A2 Stainless steel



STAINLESS STEEL

Aluminum profile

CODE	SIZE	€/100			
ABEI4213	4,2 x 13	**17,927**	7	1.000	12.000
ABEI4216	4,2 x 16	**20,113**	7	1.000	8.000
ABEI4219	4,2 x 19	**20,847**	7	1.000	8.000
ABEI4813	4,8 x 13	**25,360**	8	1.000	8.000
ABEI4816	4,8 x 16	**24,780**	8	500	6.000
ABEI4819	4,8 x 19	**26,817**	8	500	6.000
ABEI4825	4,8 x 25	**30,027**	8	500	6.000
ABEI4832	4,8 x 32	**35,707**	8	500	3.000
ABEI5519	5,5 x 19	**37,023**	8	500	6.000
ABEI5522	5,5 x 22	**39,500**	8	500	4.000
ABEI5525	5,5 x 25	**41,980**	8	500	6.000
ABEI6319	6,3 x 19	**56,113**	10	500	3.000
ABEI6325	6,3 x 25	**63,840**	10	500	3.000

ABE BIMETAL Bimetal, stainless-steel, self-drilling screw with hexagonal head

ABE BIMETAL

Screw



METAL

Metal sheet

Metal sheet - heavy profiles

CODE	SIZE	€/100		DRILL CAPACITY		
BIE4825	4,8 x 25	**75,343**	8	1,75-4,40	500	6.000
BIE5525	5,5 x 25	**86,440**	8	1,75-5,25	500	6.000
BIE5532	5,5 x 32	**101,427**	8	1,75-5,25	500	3.000
BIE5538	5,5 x 38	**105,547**	8	1,75-5,25	500	3.000
BIE5550	5,5 x 50	**121,823**	8	1,75-5,25	500	2.000
BIE5558	5,5 x 58	**135,590**	8	1,75-5,25	250	1.500
BIE5565	5,5 x 65	**141,720**	8	1,75-5,25	250	1.500
BIE5580	5,5 x 80	**167,200**	8	1,75-5,25	250	1.000
BIE6325	6,3 x 25	**92,240**	10	2,50-6,00	500	3.000

ABE BIMETAL + ARVUL

Screw with vulcanized EPDM-steel washer



METAL

Metal sheet

Metal sheet - heavy profiles

CODE	SIZE	€/100		DRILL CAPACITY		
BIE164825	4,8 x 25 P16	**88,448**	8	1,75-4,40	500	2.000
BIE165525	5,5 x 25 P16	**102,467**	8	1,75-5,25	500	2.000
BIE165532	5,5 x 32 P16	**119,110**	8	1,75-5,25	500	2.000
BIE165538	5,5 x 38 P16	**122,609**	8	1,75-5,25	500	1.500
BIE165550	5,5 x 50 P16	**143,010**	8	1,75-5,25	500	1.500
BIE165558	5,5 x 58 P16	**153,868**	8	1,75-5,25	250	1.500
BIE165565	5,5 x 65 P16	**160,132**	8	1,75-5,25	250	1.500
BIE165580	5,5 x 80 P16	**186,347**	8	1,75-5,25	250	1.000
BIE166325	6,3 x 25 P16	**108,997**	10	2,50-6,00	500	2.000

Bimetal, stainless steel, self-drilling screw for beam with hexagonal head

AUTO BIMETAL

METAL — Metal sheet · Metal sheet - heavy profiles · I-beam

CODE	SIZE	€/100		THICKNESS MAX. FIXTURE	DRILL CAPACITY		
BAUTO5540	5,5 x 40	**128,757**	8	10	4,00-12,00	500	3.000
BAUTO5550	5,5 x 50	**182,827**	8	20	4,00-12,00	500	3.000
BAUTO5565	5,5 x 65	**190,993**	8	35	4,00-12,00	250	1.500
BAUTO5580	5,5 x 80	**240,070**	8	50	4,00-12,00	250	1.000
BAUTO5510	5,5 x 100	**242,763**	8	70	4,00-12,00	100	600

AUTO BIMETAL

Screw



METAL — Metal sheet · Metal sheet - heavy profiles · I-beam

CODE	SIZE	€/100		THICKNESS MAX. FIXTURE	DRILL CAPACITY		
BAUTO165540	5,5 x 40 P16	**155,930**	8	8	4,00-12,00	500	1.500
BAUTO165550	5,5 x 50 P16	**210,793**	8	18	4,00-12,00	500	1.500
BAUTO165565	5,5 x 65 P16	**217,797**	8	33	4,00-12,00	250	1.500
BAUTO165580	5,5 x 80 P16	**255,990**	8	48	4,00-12,00	250	1.000
BAUTO165510	5,5 x 100 P16	**269,887**	8	68	4,00-12,00	100	600

AUTO BIMETAL + ARVUL

Screw with vulcanized EPDM-steel washer



Self-drilling screw with hexagonal head for sandwich panels

PS

METAL — Metal sheet - heavy profiles

CODE	SIZE	€/100		THICKNESS MAX. FIXTURE	DRILL CAPACITY		
PS1955195	5,5 / 6,3 x 195 P19	**289,230**	8	130 - 185	1,50-6,00	200	400
PS1955230	5,5 / 6,3 x 230 P19	**406,007**	8	166 - 215	1,50-6,00	200	-

PS 3 + ARVUL A2

Standard drill point #3 with ATLANTIS C4-M coating and A2 stainless washer



METAL — Metal sheet - heavy profiles · I-beam

CODE	SIZE	€/100		THICKNESS MAX. FIXTURE	DRILL CAPACITY		
PSL1955255	5,5 / 6,3 x 255 P19	**565,423**	8	170 - 210	6,00-12,00	200	-
PSL1955285	5,5 / 6,3 x 285 P19	**993,677**	8	200 - 250	6,00-12,00	200	-

PS 5 + ARVUL A2

Standard drill point #5 with ATLANTIS C4-M coating and A2 stainless washer



ARVUL

Vulcanized EPDM-steel washer

ARVUL A2

A2 Stainless steel



STAINLESS STEEL

CODE	SIZE	€/100	WASHER INNER Ø		
ARINO14	P14	**12,053**	2,5	1.000	12.000
ARINO16	P16	**13,627**	2,7	1.000	6.000
ARINO18	P18	**17,147**	3,2	1.000	6.000
ARINO25	P25	**31,707**	3,3	500	3.000
ARINOM30	P30	**45,500**	6,3	500	1.500



* **ARINOM30:** Specially recommended for MTH-A2, Ø6.

DIN-7504-N HP

Panhead self-drilling screw

DIN-7504-N HP A2

A2 Stainless steel. PH recess





STAINLESS STEEL

Metal sheet | Metal sheet - heavy profiles | Aluminium frames

CODE	SIZE	€/100		THICKNESS MAX. FIXTURE	DRILL CAPACITY		
ABRA23509	3,5 x 9,5	**11,723**	PH2	2,85	0,70-2,25	1.000	24.000
ABRA23513	3,5 x 13	**14,147**	PH2	6,2	0,70-2,25	500	12.000
ABRA23519	3,5 x 19	**17,333**	PH2	12,1	0,70-2,25	500	12.000
ABRA24213	4,2 x 13	**16,567**	PH2	4,3	1,75-3,00	500	12.000
ABRA24216	4,2 x 16	**18,560**	PH2	7,3	1,75-3,00	500	12.000
ABRA24219	4,2 x 19	**19,753**	PH2	10,3	1,75-3,00	500	12.000
ABRA24225	4,2 x 25	**20,747**	PH2	16,3	1,75-3,00	250	6.000
ABRA24816	4,8 x 16	**25,990**	PH2	5,5	1,75-4,40	250	6.000
ABRA24819	4,8 x 19	**25,460**	PH2	8,7	1,75-4,40	250	6.000
ABRA24825	4,8 x 25	**28,290**	PH2	14,7	1,75-4,40	250	6.000
ABRA24832	4,8 x 32	**33,113**	PH2	21,5	1,75-4,40	250	4.000
ABRA24838	4,8 x 38	**36,250**	PH2	27,5	1,75-4,40	250	3.000
ABRA24850	4,8 x 50	**42,743**	PH2	39,5	1,75-4,40	250	3.000

BCP

Extra low head self-drilling screw and Ph recess

BCP A2

A2 Stainless steel. PH recess



STAINLESS STEEL

Metal sheet | Metal sheet - heavy profiles | Aluminium frames

CODE	SIZE	€/100		THICKNESS MAX. FIXTURE	DRILL CAPACITY		
BCPA24214	4,2 x 14	**24,470**	PH2	6	0,70-2,00	500	12.000

CP

Extra low head self-tapping screw

CP A2

A2 Stainless steel. PH recess



STAINLESS STEEL

Metal sheet | Metal sheet - heavy profiles | Aluminium frames

CODE	SIZE	€/100		THICKNESS MAX. FIXTURE		
TCPA24213	4,2 x 13	**8,980**	PH2	6	500	12.000
TCPA24222	4,2 x 22	**17,420**	PH2	15	500	12.000
TCPA24232	4,2 x 32	**22,313**	PH2	25	500	6.000

High-performance chipboard screw

TEX

STAINLESS STEEL

Wood panel Thin wood Pinewood Hardwood

A2 INOX AISI 316

CODE	SIZE	€/100			
TEXA250050	5 x 50	**27,153**	TX25	250	3.000
TEXA250060	5 x 60	**32,627**	TX25	100	2.400
TEXA250070	5 x 70	**36,980**	TX25	100	2.400

Blister

CODE	SIZE	€/BAG	PCS.	BAGS
BZTXA250050	5 x 50	**2,565**	4	20
BZTXA250060	5 x 60	**2,565**	4	20
BZTXA250070	5 x 70	**2,565**	2	20

Window Box

CODE	SIZE	€/BOX	PCS.	BOXES
VTEXA250050	5 x 50	**6,988**	20	8
VTEXA250060	5 x 60	**8,395**	20	8
VTEXA250070	5 x 70	**9,519**	20	8



TEX-A2

A2 Stainless steel. Tx recess





CE INDEX WOOD

Countersunk head chipboard screw

TP-A2

STAINLESS STEEL

Wood panel Thin wood Pinewood

A2 INOX AISI 316

CODE	SIZE	€/100			
TPA230016	3 x 16	**5,697**	PZ1	200	9.000
TPA230025	3 x 25	**7,283**	PZ1	200	9.000
TPA235020	3,5 x 20	**9,610**	PZ2	200	9.000
TPA235025	3,5 x 25	**10,380**	PZ2	200	9.000
TPA235030	3,5 x 30	**12,937**	PZ2	200	9.000
TPA235040	3,5 x 40	**18,390**	PZ2	200	4.800
TPA240030	4 x 30	**15,720**	PZ2	200	9.000
TPA240040	4 x 40	**18,563**	PZ2	200	4.800
TPA240050	4 x 50	**29,137**	PZ2	200	4.800
TPA245030	4,5 x 30	**18,463**	PZ2	200	4.800
TPA245050	4,5 x 50	**29,487**	PZ2	200	2.400
TPA250050	5 x 50	**37,190**	PZ2	200	2.400
TPA250070	5 x 70	**50,683**	PZ2	200	2.400





DIN-571

Coach wood screw with hexagonal head

DIN-571 A2

A2 Stainless steel



STAINLESS STEEL

Thin wood Pinewood

CODE	SIZE	€/100			
•TBA206040	6 x 40	**36,067**	10	100	2.400
•TBA206050	6 x 50	**42,910**	10	100	1.200
TBA206060	6 x 60	**48,797**	10	100	1.200
TBA206070	6 x 70	**55,167**	10	100	1.200
•TBA208050	8 x 50	**80,037**	13	100	1.200
•TBA208060	8 x 60	**88,080**	13	100	1.200
•TBA208070	8 x 70	**99,517**	13	100	600
TBA208080	8 x 80	**111,423**	13	100	600
•TBA210080	10 x 80	**188,553**	17	100	400

• Non-approved sizes

INV

Tamperproof screw with TX recess

INV A2

A2 Stainless steel



STAINLESS STEEL

Thin wood Pinewood

CODE	SIZE	€/100			
•INVA27050	7 x 50	**102,340**	TX40	100	1.200
•INVA27060	7 x 60	**118,637**	TX40	100	600
INVA27070	7 x 70	**121,547**	TX40	100	600
INVA27080	7 x 80	**134,197**	TX40	100	600

• Non-approved sizes

Hexagonal bolt with thread up to the head. 8.8 DIN-933

STAINLESS STEEL

DIN-933 A2

A2 Stainless steel



CODE	SIZE	€/100			
D933IM04010	M4 x 10	12,083	7	500	12.000
D933IM04016	M4 x 16	14,473	7	500	12.000
D933IM04020	M4 x 20	16,650	7	500	8.000
D933IM04025	M4 x 25	17,960	7	500	8.000
D933IM04030	M4 x 30	20,573	7	500	6.000
D933IM04035	M4 x 35	25,250	7	250	6.000
D933IM04040	M4 x 40	28,077	7	250	6.000
D933IM05010	M5 x 10	12,627	8	500	8.000
D933IM05016	M5 x 16	14,800	8	500	-
D933IM05020	M5 x 20	16,760	8	500	6.000
D933IM05025	M5 x 25	19,263	8	500	4.000
D933IM05030	M5 x 30	22,310	8	500	4.000
D933IM05035	M5 x 35	24,707	8	250	3.000
D933IM05040	M5 x 40	27,753	8	250	3.000
D933IM05050	M5 x 50	33,960	8	250	3.000
D933IM06010	M6 x 10	21,180	10	250	6.000
D933IM06016	M6 x 16	22,437	10	250	4.000
D933IM06020	M6 x 20	25,993	10	250	4.000
D933IM06025	M6 x 25	27,007	10	250	3.000
D933IM06030	M6 x 30	31,380	10	250	3.000
D933IM06035	M6 x 35	35,483	10	250	2.000
D933IM06040	M6 x 40	39,223	10	250	2.000
D933IM06050	M6 x 50	46,547	10	250	1.500
D933IM08016	M8 x 16	41,407	13	200	1.600
D933IM08020	M8 x 20	44,880	13	200	1.600
D933IM08025	M8 x 25	50,663	13	200	1.600
D933IM08030	M8 x 30	56,327	13	200	1.200
D933IM08035	M8 x 35	61,977	13	200	1.200
D933IM08040	M8 x 40	68,413	13	200	1.200
D933IM08050	M8 x 50	82,320	13	200	800
D933IM08060	M8 x 60	93,953	13	200	800
D933IM08070	M8 x 70	112,587	13	200	800
D933IM08080	M8 x 80	128,683	13	100	600
D933IM08090	M8 x 90	142,570	13	100	600
D933IM08100	M8 x 100	159,967	13	100	600
D933IM10020	M10 x 20	84,357	17	200	800
D933IM10025	M10 x 25	88,470	17	200	800
D933IM10030	M10 x 30	96,950	17	200	800
D933IM10035	M10 x 35	105,697	17	200	800

CODE	SIZE	€/100			
D933IM10040	M10 x 40	111,617	17	200	-
D933IM10050	M10 x 50	132,967	17	200	-
D933IM10060	M10 x 60	152,267	17	100	600
D933IM10070	M10 x 70	171,757	17	100	400
D933IM10080	M10 x 80	202,097	17	100	400
D933IM10090	M10 x 90	227,687	17	50	300
D933IM10100	M10 x 100	256,903	17	50	300
D933IM12020	M12 x 20	138,480	19	100	600
D933IM12030	M12 x 30	144,040	19	100	600
D933IM12040	M12 x 40	162,333	19	100	400
D933IM12050	M12 x 50	187,337	19	100	400
D933IM12060	M12 x 60	213,523	19	100	400
D933IM12070	M12 x 70	239,983	19	100	-
D933IM12080	M12 x 80	299,853	19	50	300
D933IM12090	M12 x 90	328,287	19	50	300
D933IM12100	M12 x 100	356,733	19	25	150
D933IM14030	M14 x 30	271,427	22	50	300
D933IM14040	M14 x 40	297,273	22	50	300
D933IM14050	M14 x 50	338,637	22	50	300
D933IM14060	M14 x 60	385,163	22	50	200
D933IM14070	M14 x 70	429,107	22	50	200
D933IM14080	M14 x 80	460,923	22	25	150
D933IM14100	M14 x 100	632,190	22	25	150
D933IM16030	M16 x 30	299,723	24	50	300
D933IM16040	M16 x 40	311,187	24	50	200
D933IM16050	M16 x 50	354,900	24	50	200
D933IM16060	M16 x 60	403,760	24	50	200
D933IM16070	M16 x 70	450,050	24	25	150
D933IM16080	M16 x 80	498,910	24	25	150
D933IM16090	M16 x 90	588,760	24	25	150
D933IM16100	M16 x 100	637,770	24	25	100
D933IM18030	M18 x 30	599,210	27	25	100
D933IM18040	M18 x 40	633,757	27	25	200
D933IM18050	M18 x 50	692,297	27	25	150
D933IM18060	M18 x 60	773,733	27	25	150
D933IM18070	M18 x 70	860,250	27	25	100
D933IM18080	M18 x 80	941,717	27	25	100
D933IM18090	M18 x 90	1.023,167	27	25	100
D933IM18100	M18 x 100	1.104,613	27	25	100

Blister

CODE	SIZE	€/BAG	PCS.	BAGS
BZ3I04010	M4 x 10	2,565	6	20
BZ3I04016	M4 x 16	2,565	6	20
BZ3I04020	M4 x 20	2,565	6	20
BZ3I04030	M4 x 30	2,565	6	20
BZ3I04040	M4 x 40	2,565	6	20
BZ3I05010	M5 x 10	2,565	6	20
BZ3I05016	M5 x 16	2,565	6	20
BZ3I05020	M5 x 20	2,565	6	20
BZ3I05025	M5 x 25	2,277	6	20
BZ3I05030	M5 x 30	2,565	6	20
BZ3I05040	M5 x 40	2,565	6	20
BZ3I05050	M5 x 50	2,565	6	20
BZ3I06016	M6 x 16	2,565	6	20
BZ3I06020	M6 x 20	2,565	6	20
BZ3I06025	M6 x 25	2,565	6	20
BZ3I06030	M6 x 30	2,565	6	20
BZ3I06040	M6 x 40	2,565	6	20
BZ3I06050	M6 x 50	2,565	6	20
BZ3I08016	M8 x 16	2,565	4	20
BZ3I08020	M8 x 20	2,565	4	20
BZ3I08025	M8 x 25	2,565	4	20
BZ3I08030	M8 x 30	2,565	4	20
BZ3I08040	M8 x 40	2,565	4	20
BZ3I08050	M8 x 50	2,565	4	20
BZ3I08060	M8 x 60	2,565	4	20
BZ3I10020	M10 x 20	2,565	2	20
BZ3I10030	M10 x 30	2,565	2	20
BZ3I10040	M10 x 40	2,565	2	20

Window Box

CODE	SIZE	€/BOX	PCS.	BOXES
VD933I04010	M4 x 10	5,951	40	8
VD933I04016	M4 x 16	7,130	40	8
VD933I04020	M4 x 20	7,905	40	8
VD933I04030	M4 x 30	7,601	30	8
VD933I04040	M4 x 40	8,328	25	8
VD933I05010	M5 x 10	6,222	40	8
VD933I05016	M5 x 16	7,294	40	8
VD933I05020	M5 x 20	8,258	40	8
VD933I05030	M5 x 30	5,495	20	8
VD933I05040	M5 x 40	6,838	20	8
VD933I05050	M5 x 50	4,390	10	8
VD933I06010	M6 x 10	7,828	30	8
VD933I06016	M6 x 16	7,983	30	8
VD933I06020	M6 x 20	9,251	30	8
VD933I06025	M6 x 25	8,009	25	8
VD933I06030	M6 x 30	9,307	25	8
VD933I06040	M6 x 40	7,249	15	8
VD933I06050	M6 x 50	5,733	10	8
VD933I08016	M8 x 16	10,201	20	8
VD933I08020	M8 x 20	11,054	20	8
VD933I08025	M8 x 25	12,481	20	8
VD933I08030	M8 x 30	10,408	15	8
VD933I08040	M8 x 40	8,428	10	8
VD933I08050	M8 x 50	10,138	10	8
VD933I08060	M8 x 60	11,573	10	8
VD933I10020	M10 x 20	10,390	10	8
VD933I10030	M10 x 30	11,943	10	8
VD933I10040	M10 x 40	13,749	10	8
VD933I10050	M10 x 50	16,378	10	8
VD933I10060	M10 x 60	18,755	10	8

ISF-CC

Connectors + Accessories for the solar structures assembly

NEW DIN-6921 A2

METAL

Screw DIN-6921. Hexagonal flanged bolt with serration. Stainless steel A2



CODE	SIZE	€/100	INSTALLATION KEY		
6921I08020	M8 x 20	**46,040**	13	200	2.400
6921I08050	M8 x 50	**87,807**	13	100	600
6921I08070	M8 x 70	**112,967**	13	100	600

NEW DIN-603 A2

METAL

Screw DIN-603. Round head screw with square neck. Stainless steel A2



CODE	SIZE	€/100		
D603I08016	M8 x 16	**42,047**	200	2.400

DIN-934

Hexagonal nut

DIN-934 A2

STAINLESS STEEL

A2 Stainless steel



CODE	SIZE	€/100	INSTALLATION KEY		
D934IM04	M4	**4,447**	7	500	22.500
D934IM05	M5	**5,140**	8	500	12.000
D934IM06	M6	**8,483**	10	500	12.000
D934IM08	M8	**17,207**	13	250	4.000
D934IM10	M10	**38,387**	17	250	2.000
D934IM12	M12	**56,280**	19	250	1.500
D934IM14	M14	**80,893**	22	100	800
D934IM16	M16	**113,520**	24	100	600
D934IM18	M18	**180,550**	27	100	600
D934IM20	M20	**237,070**	30	50	400
D934IM22	M22	**327,683**	32	50	300
D934IM24	M24	**425,983**	36	25	200

Blister

CODE	SIZE	€/BAG	PCS.	BAGS
BZ934IM04	M4	**2,565**	10	20
BZ934IM05	M5	**2,565**	8	20
BZ934IM06	M6	**2,565**	8	20
BZ934IM08	M8	**2,565**	6	20
BZ934IM10	M10	**2,565**	5	15

Window Box

CODE	SIZE	€/BOX	PCS.	BOXES
VD934IM04	M4	**3,274**	50	8
VD934IM05	M5	**3,786**	50	8
VD934IM06	M6	**5,621**	50	8
VD934IM08	M8	**6,841**	30	8
VD934IM10	M10	**10,175**	20	8

Nylon insert nut — DIN-985

STAINLESS STEEL

DIN-985 A2

A2 Stainless steel



CODE	SIZE	€/100	INSTALLATION KEY		
D985IM04	M4	**8,233**	7	500	8.000
D985IM05	M5	**8,867**	8	500	8.000
D985IM06	M6	**12,527**	10	500	8.000
D985IM08	M8	**24,697**	13	250	4.000
D985IM10	M10	**52,593**	17	250	2.000
D985IM12	M12	**81,753**	19	100	1.200
D985IM14	M14	**146,147**	22	100	800
D985IM16	M16	**177,133**	24	50	600
D985IM18	M18	**405,373**	27	50	400
D985IM20	M20	**519,897**	30	25	300
D985IM22	M22	**1.176,747**	32	25	300
D985IM24	M24	**1.586,600**	36	25	150

Blister

CODE	SIZE	€/BAG	PCS.	BAGS
BZ985IM04	M4	**2,565**	10	20
BZ985IM05	M5	**2,565**	8	20
BZ985IM06	M6	**2,565**	8	20
BZ985IM08	M8	**2,565**	6	20
BZ985IM10	M10	**2,565**	5	15

Window Box

CODE	SIZE	€/BOX	PCS.	BOXES
VD985IM04	M4	**5,454**	50	8
VD985IM05	M5	**5,877**	50	8
VD985IM06	M6	**8,302**	50	8
VD985IM08	M8	**9,819**	30	8
VD985IM10	M10	**13,942**	20	8

Connectors + Accessories for the solar structures assembly — ISF-CC

METAL

DIN-6923 A2 NEW

DIN-6923 Hexagonal flange nut with serration. Stainless steel A2



CODE	SIZE	€/100	INSTALLATION KEY		
D6923IM08	M8	**22,833**	13	250	3.000
D6923IM10	M10	**38,510**	15	250	3.000
D6923IM12	M12	**65,500**	18	250	1.500

Plain washer — DIN-125

STAINLESS STEEL

DIN-125 A2

A2 Stainless steel



CODE	SIZE	€/100		
D125IM04	M4	**1,323**	500	22.500
D125IM05	M5	**1,750**	500	22.500
D125IM06	M6	**3,170**	500	22.500
D125IM08	M8	**5,437**	250	11.250
D125IM10	M10	**10,387**	250	6.000
D125IM12	M12	**18,477**	250	3.000
D125IM14	M14	**28,960**	200	2.400
D125IM16	M16	**31,977**	100	2.400
D125IM18	M18	**47,420**	100	1.600
D125IM20	M20	**50,357**	50	1.200
D125IM22	M22	**59,713**	50	1.200
D125IM24	M24	**104,480**	50	600

Blister

CODE	SIZE	€/BAG	PCS.	BAGS
BZ125IM04	M4	**2,565**	10	20
BZ125IM05	M5	**2,565**	8	20
BZ125IM06	M6	**2,565**	8	20
BZ125IM08	M8	**2,565**	6	20
BZ125IM10	M10	**2,565**	5	20

Window Box

CODE	SIZE	€/BOX	PCS.	BOXES
VD125IM04	M4	**3,241**	100	8
VD125IM05	M5	**3,252**	75	8
VD125IM06	M6	**4,108**	75	8
VD125IM08	M8	**4,283**	50	8
VD125IM10	M10	**7,142**	50	8

DIN-9021 Wide plain washer

DIN-9021 A2

A2 Stainless steel



STAINLESS STEEL

CODE	SIZE	€/100		
D9021IM04	M4	**2,380**	500	22.500
D9021IM05	M5	**4,357**	500	12.000
D9021IM06	M6	**7,893**	500	8.000
D9021IM08	M8	**15,560**	200	4.800
D9021IM10	M10	**35,207**	100	1.600
D9021IM12	M12	**60,720**	100	800
D9021IM14	M14	**131,004**	100	800
D9021IM16	M16	**132,610**	50	600
D9021IM18	M18	**237,443**	50	400
D9021IM20	M20	**266,213**	25	300
D9021IM22	M22	**274,243**	25	200
D9021IM24	M24	**315,377**	25	150

Blister

CODE	SIZE	€/BAG	PCS.	BAGS
BZ9021IM04	M4	**2,565**	10	20
BZ9021IM05	M5	**2,565**	8	20
BZ9021IM06	M6	**2,565**	8	20
BZ9021IM08	M8	**2,565**	6	20
BZ9021IM10	M10	**2,565**	5	20

Window Box

CODE	SIZE	€/BOX	PCS.	BOXES
VD9021IM04	M4	**3,508**	100	8
VD9021IM05	M5	**4,331**	75	8
VD9021IM06	M6	**7,846**	75	8
VD9021IM08	M8	**8,250**	40	8
VD9021IM10	M10	**9,333**	20	8

ISF-CC Connectors + Accessories for the solar structures assembly

NEW

DIN-127 A2

Grower spring washer DIN-127. Stainless steel A2



METAL

CODE	SIZE	€/100		
D127IM08	M8	**4,530**	200	9.000
D127IM10	M10	**7,237**	100	4.500
D127IM12	M12	**10,923**	100	4.500

Reinforced pipe clamp M8 + M10Reinforced pipe clamp M8 + M10. A2 Stainless steel

AB-RE A2

STAINLESS STEEL

Satinless steel pipe | PVC pipes | A2 INOX AISI 316



02 P. 378 Technical info.

REINFORCED M8 +M10

CODE	SIZE	€/100	SIZE IN INCHES	ØD(MM)	MAXIMUN LOAD		
ABREA2018	18 (M8+M10)	**350,963**	3/8"	15 - 18	150	50	300
ABREA2022	22 (M8+M10)	**369,093**	1/2"	20 - 24	150	50	200
ABREA2028	28 (M8+M10)	**405,210**	3/4"	26 - 30	150	50	150
ABREA2035	35 (M8+M10)	**423,987**	1"	32 - 36	150	50	100
ABREA2040	40 (M8+M10)	**448,793**	1 1/4"	36 - 42	150	25	100
ABREA2048	48 (M8+M10)	**473,157**	1 1/2"	47 - 50	150	25	100
ABREA2054	54 (M8+M10)	**499,703**	-	51 - 55	150	25	75
ABREA2060	60 (M8+M10)	**531,453**	2"	60 - 64	150	25	75
ABREA2075	75 (M8+M10)	**601,983**	2 1/2"	75 - 80	150	25	50
ABREA2090	90 (M8+M10)	**692,637**	3"	87 - 92	150	25	-
ABREA2110	110 (M8+M10)	**749,337**	-	106 - 112	150	25	-
ABREA2115	115 (M8+M10)	**781,637**	4"	114 - 119	150	25	-
ABREA2125	125 (M8+M10)	**838,380**	4 1/2"	124 - 131	150	25	-
ABREA2140	140 (M8+M10)	**926,653**	5"	133 - 140	150	25	-
ABREA2160	160 (M8+M10)	**1.057,567**	6"	159 - 163	150	25	-
ABREA2200	200 (M8+M10)	**1.475,183**	-	199 - 212	150	25	-

Reinforced pipe clamp M8 + M10

AB-RE A4

STAINLESS STEEL

Satinless steel pipe | PVC pipes | A4 INOX AISI 316



02 P. 378 Technical info.

REINFORCED M8 +M10

CODE	SIZE	€/100	SIZE IN INCHES	ØD(MM)	MAXIMUN LOAD		
ABREA4018	18 (M8+M10)	**449,050**	3/8"	15 - 18	150	50	300
ABREA4022	22 (M8+M10)	**474,767**	1/2"	20 - 24	150	50	200
ABREA4028	28 (M8+M10)	**507,057**	3/4"	26 - 30	150	50	150
ABREA4035	35 (M8+M10)	**529,697**	1"	32 - 36	150	50	100
ABREA4040	40 (M8+M10)	**568,197**	1 1/4"	36 - 42	150	25	100
ABREA4048	48 (M8+M10)	**613,867**	1 1/2"	47 - 50	150	25	100
ABREA4054	54 (M8+M10)	**640,433**	-	51 - 55	150	25	75
ABREA4060	60 (M8+M10)	**682,693**	2"	60 - 64	150	25	75
ABREA4075	75 (M8+M10)	**757,447**	2 1/2"	75 - 80	150	25	50
ABREA4090	90 (M8+M10)	**830,587**	3"	87 - 92	150	25	-
ABREA4110	110 (M8+M10)	**956,430**	-	106 - 112	150	25	-
ABREA4115	115 (M8+M10)	**1.026,100**	4"	114 - 119	150	25	-
ABREA4125	125 (M8+M10)	**1.081,013**	4 1/2"	124 - 131	150	25	-
ABREA4140	140 (M8+M10)	**1.279,617**	5"	133 - 140	150	25	-
ABREA4160	160 (M8+M10)	**1.404,623**	-	159 - 163	150	25	-
ABREA4200	200 (M8+M10)	**1.704,457**	-	199 - 212	150	25	-

AB-RI A2

Reinforced isophonic pipe clamp M8 + M10



02 P. 378 Technical info.

CTE CÓDIGO TÉCNICO DE LA EDIFICACIÓN

REINFORCED

M8 +M10



STAINLESS STEEL


Satinless steel pipe


PVC pipes


Steel pipe

A2 INOX AISI 316

CODE	SIZE	€/100	SIZE IN INCHES	ØD(MM)	MAXIMUN LOAD		
ABRIA2018	18 (M8+M10)	**452,633**	3/8"	15 - 18	150	50	200
ABRIA2022	22 (M8+M10)	**465,123**	1/2"	20 - 24	150	50	150
ABRIA2028	28 (M8+M10)	**485,820**	3/4"	26 - 30	150	50	150
ABRIA2035	35 (M8+M10)	**511,127**	1"	32 - 36	150	50	100
ABRIA2040	40 (M8+M10)	**538,987**	1 1/4"	36 - 42	150	25	75
ABRIA2048	48 (M8+M10)	**571,240**	1 1/2"	47 - 50	150	25	75
ABRIA2054	54 (M8+M10)	**623,673**	-	51 - 55	150	25	50
ABRIA2060	60 (M8+M10)	**657,530**	2"	60 - 64	150	25	50
ABRIA2075	75 (M8+M10)	**740,760**	2 1/2"	75 - 80	150	25	-
ABRIA2090	90 (M8+M10)	**800,907**	3"	87 - 92	150	25	-
ABRIA2110	110 (M8+M10)	**890,610**	-	106 - 112	150	25	-
ABRIA2115	115 (M8+M10)	**915,293**	4"	114 - 119	150	25	-
ABRIA2125	125 (M8+M10)	**986,493**	4 1/2"	124 - 131	150	25	-
ABRIA2140	140 (M8+M10)	**1.021,377**	5"	133 - 140	150	25	-
ABRIA2160	160 (M8+M10)	**1.145,937**	6"	159 - 163	150	25	-

AB-RI A4

Reinforced isophonic pipe clamp M8 + M10



02 P. 378 Technical info.

CTE CÓDIGO TÉCNICO DE LA EDIFICACIÓN

REINFORCED

M8 +M10



STAINLESS STEEL


Satinless steel pipe


PVC pipes


Steel pipe

A4 INOX AISI 316

CODE	SIZE	€/100	SIZE IN INCHES	ØD(MM)	MAXIMUN LOAD		
ABRIA4018	18 (M8+M10)	**536,790**	3/8"	15 - 18	150	50	200
ABRIA4022	22 (M8+M10)	**564,327**	1/2"	20 - 24	150	50	150
ABRIA4028	28 (M8+M10)	**589,053**	3/4"	26 - 30	150	50	150
ABRIA4035	35 (M8+M10)	**633,163**	1"	32 - 36	150	50	100
ABRIA4040	40 (M8+M10)	**682,457**	1 1/4"	36 - 42	150	25	75
ABRIA4048	48 (M8+M10)	**733,720**	1 1/2"	47 - 50	150	25	75
ABRIA4054	54 (M8+M10)	**770,017**	-	51 - 55	150	25	50
ABRIA4060	60 (M8+M10)	**841,693**	2"	60 - 64	150	25	50
ABRIA4075	75 (M8+M10)	**920,903**	2 1/2"	75 - 80	150	25	-
ABRIA4090	90 (M8+M10)	**1.010,433**	3"	87 - 92	150	25	-
ABRIA4110	110 (M8+M10)	**1.191,347**	-	106 - 112	150	25	-
ABRIA4115	115 (M8+M10)	**1.238,547**	4"	114 - 119	150	25	-
ABRIA4125	125 (M8+M10)	**1.312,093**	4 1/2"	124 - 131	150	25	-
ABRIA4140	140 (M8+M10)	**1.422,880**	5"	133 - 140	150	25	-
ABRIA4160	160 (M8+M10)	**1.630,030**	6"	159 - 163	150	25	-

U-bolt — AB-ZI

Steel pipe

AB-ZI A2

A2 Stainless steel



CODE	SIZE	€/100	Ø ROD INCHES	MAXIMUN LOAD		
AZA2060500	M6 1/2"	**105,883**	1/2"	250	100	600
AZA2060750	M6 3/4"	**123,093**	3/4"	250	100	600
AZA2061000	M6 1"	**151,650**	1"	250	100	400
AZA2061250	M6 1 1/4"	**179,560**	1 1/4"	250	50	300
AZA2081500	M8 1 1/2"	**312,037**	1 1/2"	350	50	150
AZA2082000	M8 2"	**362,937**	2"	350	50	150
AZA2082500	M8 2 1/2"	**408,927**	2 1/2"	350	50	100
AZA2083000	M8 3"	**444,473**	3"	350	50	100
AZA2104000	M10 4"	**904,320**	4"	350	50	-
AZA2106000	M10 6"	**1.166,313**	6"	350	25	-
AZA2108000	M10 8"	**1.395,300**	8"	350	25	-

Stainless steel clamp Indextube — AB-IT

SANITATION

AB-ITS NEW

Simple



CODE	SIZE	€/100		
ABITS015	Ø15	**122,600**	100	600
ABITS018	Ø18	**132,847**	100	400
ABITS022	Ø22	**196,913**	100	400
ABITS028	Ø28	**264,693**	100	300

SANITATION

AB-ITD NEW

Double



CODE	SIZE	€/100		
ABITD015	Ø15	**453,273**	50	300
ABITD018	Ø18	**513,180**	50	200
ABITD022	Ø22	**201,960**	50	100

Pipe clamp M6 — AB-M6 A2

STAINLESS STEEL

Satinless steel pipe — PVC pipes



02 P. 397 Technical info.

CODE	SIZE	€/100	SIZE IN INCHES	ØD(MM)	MAXIMUN LOAD		
ABM6A2012	12 (M6)	**198,680**	1/4"	12	70	100	1.200
ABM6A2015	15 (M6)	**202,270**	-	14 - 15	70	100	600
ABM6A2018	18 (M6)	**205,860**	3 / 8"	16 - 18	70	100	600
ABM6A2020	20 (M6)	**209,980**	1 / 2"	19 - 21	70	100	600
ABM6A2022	22 (M6)	**212,633**	-	22 -24	70	100	600
ABM6A2028	28 (M6)	**224,573**	3/4"	25 - 30	70	100	400

AB-SF A2

Hose clamp



02 P. 403 Technical info.

Embossed washer



For several Ø



STAINLESS STEEL

Flexible pipe | PVC pipes | A2 INOX

CODE	SIZE	€/100	SIZE IN INCHES		
ASF2010016	10-16	**91,983**	-	100	1.200
ASF2012020	12-20	**94,273**	1/2"- 7/8"	100	600
ASF2016027	16-27	**98,337**	5/8"- 1 1/16"	100	600
ASF2020032	20-32	**110,910**	3/4"- 1 1/4"	100	600
ASF2025040	25-40	**121,187**	1"- 1 5/8"	100	200
ASF2032050	32-50	**168,677**	1 3/8"- 2"	100	300
ASF2040060	40-60	**179,097**	1 5/8"- 2 3/8"	100	200
ASF2050070	50-70	**186,910**	2"- 2 3/4"	50	100
ASF2060080	60-80	**196,483**	2 3/8"- 3 1/8"	50	100
ASF2070090	70-90	**206,930**	2 3/4"- 3 1/2"	50	100
ASF2080100	80-100	**213,867**	3 1/8"- 4"	50	100
ASF2090110	90-110	**249,403**	3 1/2"- 4 3/8"	50	50
ASF2100120	100-120	**259,197**	4"- 4 3/4"	25	25
ASF2110130	110-130	**268,960**	4 3/8"- 5 1/8"	25	25
ASF2120140	120-140	**282,660**	4 3/4"- 5 1/2"	25	25
ASF2130150	130-150	**293,423**	5 1/8"- 5 7/8"	25	25

AB-SF IR

Stainless hose clamp roll

AB-SF IR

Kit (Roll 3 m. + 8 heads). Stainless steel



Flexible pipe | PVC pipes | Cooper tipe | Steel pipe | INOX AISI 430

CODE	SIZE	€/PC		
ASFIR03	9 x 0,6 mm/ 3 m	**1.429,560**	1	50

AB-SF IRC

Head. Stainless steel



Flexible pipe | PVC pipes | Cooper tipe | Steel pipe | INOX AISI 430

CODE	SIZE	€/100		
ASFIRCA	Cabezal	**102,113**	50	1.000

AB-SF IRR

Roll 30 m. Stainless steel



Flexible pipe | PVC pipes | Cooper tipe | Steel pipe | INOX AISI 430

CODE	SIZE	€/PC		
ASFIR30	9 x 0,6 mm/ 30 m	**5.105,580**	1	10

CI-PE

Fixing band

CI-PE A2

Round fixing band. A2 Stainless steel



STAINLESS STEEL

PVC pipes | Cooper tipe | Steel pipe | Aerated concrete | Concrete | A2 INOX

CODE	SIZE	€/PC	MIN. ORDER QTY.		
CIPEA21708	17 x 0,8 x 10 m	**40,304**	1	1	30



Sanitary fixings — SA

SA-IL

Stainless steel WC and bidet fixing kit with long nylon plug



Stone | Hollow brick | Solid brick | Aerated concrete | Hollow concrete | Concrete | NYLON | A2 INOX

CODE	SIZE	€/KIT	KITS X
SAIL06080	M6 x 80	**3,017**	100

2 PCS x KIT

SA-CI

Cistern fixing kit



Stone | Hollow brick | Solid brick | Aerated concrete | Hollow concrete | Concrete | A2 INOX

CODE	SIZE	€/KIT	KITS X
SACI06080	M6 x 80	**5,727**	100

2 PCS x KIT

ALSO AVAILABLE easykits

Type “C” profiles for light loads — GP

GP-A2

A2 Stainless steel



STAINLESS STEEL | A2 INOX

CODE	SIZE	€/100	LENGTH	
GPI271812	27 x 18 x 1,25 x 2000	**12.032,189**	2.000	6
GPI283015	28 x 30 x 1,50 x 2000	**27.975,448**	2.000	6

Accessories for type “C” profiles — EG

EG-A2

A2 Stainless steel channel bracket



STAINLESS STEEL | A2 INOX

CODE	SIZE	€/100	SUITABLE FOR		
EMI45	50 x 50 45°	**617,260**	27/18 - 28/30 - 38/40	50	200
EMI90	54 x 54 90°	**617,260**	27/18 - 28/30 - 38/40	50	-
EMI00	100 180°	**611,967**	27/18 - 28/30 - 38/40	50	200

PG

Accessories for type “C” profiles

PG-A2

A2 Stainless steel Channel U-fitting



STAINLESS STEEL

CODE	SIZE	€/100	SUITABLE FOR		
PGI2718	27 / 18 x 81	**301,077**	27/18	50	300
PGI2830	28 / 30 x 81	**346,240**	28/30	50	200
PGI3840	38 / 40 x 93	**421,507**	38/40	50	100

RV

Threaded rod

RV-A2

A2 Stainless steel. 1 meter



STAINLESS STEEL

CODE	SIZE	€/100	PITCH	
975A2M04	M4 x 1000	**380,780**	0,7	1
975A2M05	M5 x 1000	**449,000**	0,8	1
975A2M06	M6 x 1000	**619,920**	1	1
975A2M08	M8 x 1000	**1.006,010**	1,25	1
975A2M10	M10 x 1000	**1.457,350**	1,5	1
975A2M12	M12 x 1000	**2.218,653**	1,75	1
975A2M14	M14 x 1000	**3.885,137**	2	1
975A2M16	M16 x 1000	**4.486,253**	2	1
975A2M18	M18 x 1000	**4.894,093**	2,5	1
975A2M20	M20 x 1000	**6.753,847**	2,5	1
975A2M22	M22 x 1000	**7.894,990**	2,5	1
975A2M24	M24 x 1000	**10.657,117**	3	1
975A2M27	M27 x 1000	**12.844,027**	3	1
975A2M30	M30 x 1000	**19.989,633**	3,5	1
975A2M33	M33 x 1000	**25.095,807**	3,5	1
975A2M36	M36 x 1000	**28.864,247**	4	1

MA

Coupling nut

MARI

Coupling nut. Round. A2 Stainless steel



STAINLESS STEEL

CODE	SIZE	€/100	LENGTH	
MARI0830	M8 x 30	**207,170**	30	100
MARI1030	M10 x 30	**285,210**	30	100

AB-TA

Threaded screw clamp and staple

AB-TA A2

A2 Stainless steel





STAINLESS STEEL

CODE	SIZE	€/100		
ABTA20630	M6 x 30	**78,334**	100	2.400

02 P. 412 Technical info.

Double threaded screw — ES-DR

STAINLESS STEEL | A2 INOX

CODE	SIZE	€/100		
ESDA208060	M8 x 60	**115,807**	100	800
ESDA210060	M10 x 60	**215,433**	100	800

ES-DA2

A2 Stainless steel. Tx



02 P. 413 Technical info.

Rivets — RE

METAL | Metal sheet | Metal sheet - heavy profiles | Aluminium frames | A2 INOX

CODE	SIZE	€/100	DRILL Ø	THICKNESS MAX. FIXTURE		
REIN3206	3,2 x 6,4	**19,440**	3,3	0,5 – 3	500	6.000
REIN3208	3,2 x 8	**20,797**	3,3	3 – 5	500	6.000
REIN3212	3,2 x 12,7	**30,647**	3,3	6,5 – 8,5	500	6.000
REIN3215	3,2 x 15,9	**37,027**	3,3	10,5 – 12,5	500	6.000
REIN4008	4 x 8,5	**34,910**	4,1	2,5 – 4,5	500	6.000
REIN4010	4 x 10,2	**37,150**	4,1	4,5 – 6,5	500	6.000
REIN4012	4 x 12	**42,103**	4,1	6,5 – 8,5	500	6.000
REIN4016	4 x 16	**50,977**	4,1	10 – 12	500	3.000
REIN4810	4,8 x 10,8	**51,360**	5	4 – 6	500	3.000
REIN4812	4,8 x 12	**56,140**	5	6 – 8	500	3.000
REIN4816	4,8 x 16	**69,020**	5	8 – 11	250	3.000
REIN4820	4,8 x 20,3	**96,840**	5	11 – 13	250	3.000
REIN4818	4,8 x 18	**73,797**	5	13 – 15	250	3.000

RE-IN

Panhead. A2 Stainless steel



Flat bar for fixation — PF

STAINLESS STEEL | A4 INOX

CODE	SIZE	€/100		
PFA4M0800	M8	**303,137**	100	600
PFA4M0810	M8 + M10	**361,303**	100	600
PFA4M1000	M10	**346,320**	100	600

PF-A4

A4 Stainless steel



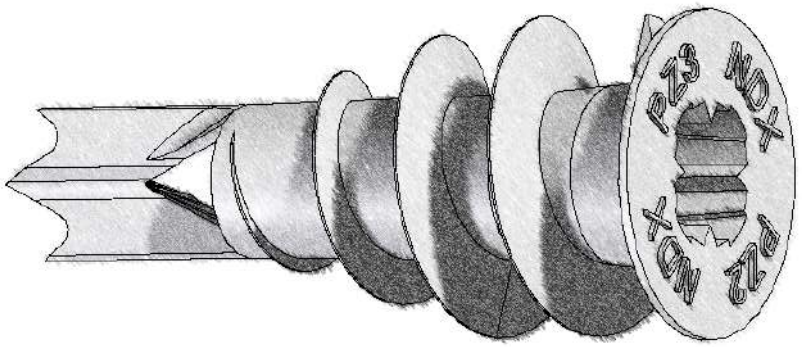



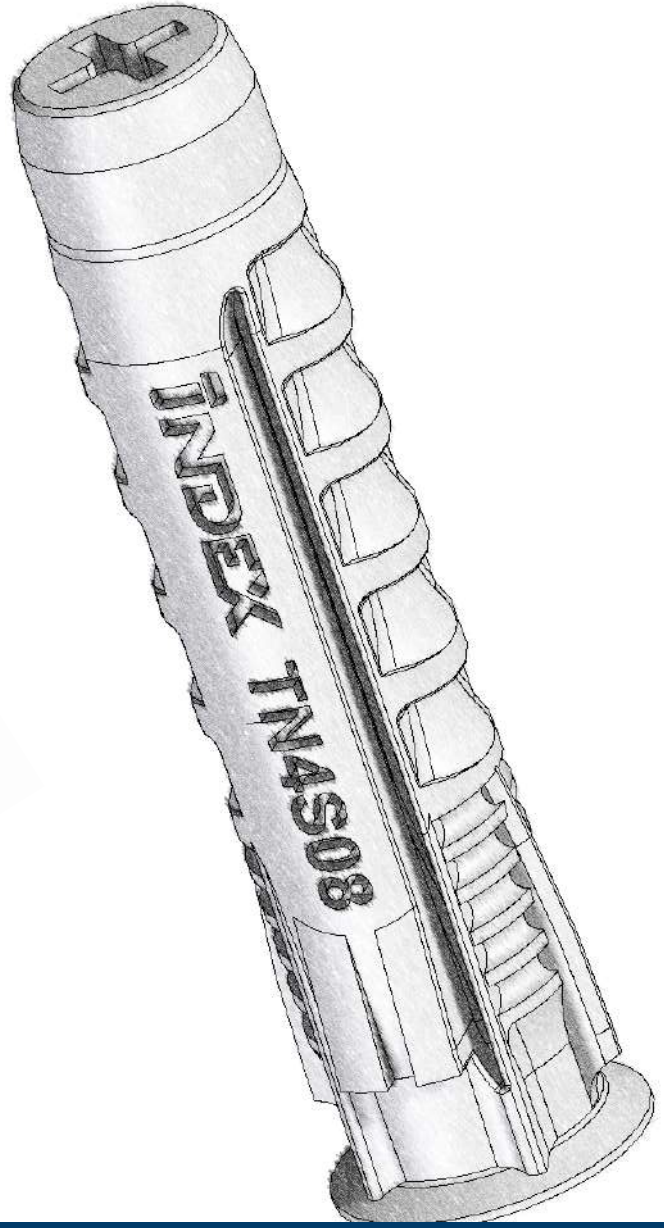

TECHNICAL INFORMATION

TECHNICAL INSTALLATION PARAMETERS

On the following pages, you will find a series of quick reference points that will help you to choose the right product for your installation. If you would like further information, please refer to our technical documentation, which is available at: www.indexfix.com

The first points are descriptive and help us to understand the geometry of the anchorage and its corresponding reference code. The next ones are product installation parameters, using mm as units of distance, kg for the maximum recommended loads and Nm for the tightening torque of the anchors.

The majority of the products come with a dimensioned sketch, and the meaning of these levels for the anchors are described below:

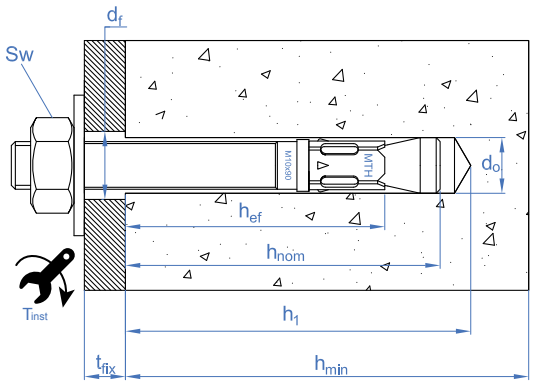

d_0	bit or drill diameter [mm]
h_1	minimum drill or hole depth [mm]
h_{min}	minimum base material thickness [mm]
d_f	diameter of hole in the fixture [mm]
h_{nom}	anchor installation depth [mm]
t_{fix}	maximum fixture thickness [mm]
t_{inst}	tightening torque required for the correct anchor expansion [Nm]
C_{cr}	critical edge distance [mm]
S_c	critical distance between anchors [mm]
h_{ef}	effective anchor depth [mm]
SW	installation wrench or distance between the nut faces [mm]

EXTRACTION

Maximum recommended tensile load that the anchor can resist. This has been calculated by applying a safety factor of 1.4 to the anchor's resistance of calculation and it is expressed in kg. This factor is applicable for cracked and non-cracked concrete. The safety factor for other materials can reach 2.5.

SHEARING

Maximum recommended shear load that the anchor can resist. This has been calculated by applying a safety factor of 1.4 to the anchor's resistance of calculation and it is expressed in kg. This factor is applicable for cracked and non-cracked concrete. The safety factor for other materials can reach 2.5.

MTP

Through bolt anchor for heavy loads in cracked & uncracked concrete

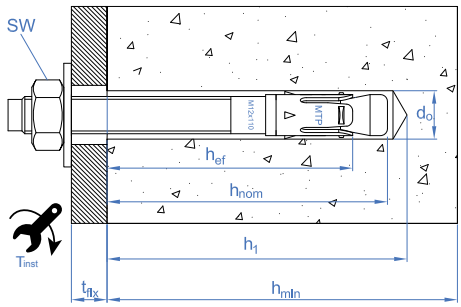

MTP

Opt.1 ETA Assessed. Zinc-plated shaft. A4 Stainless clip

CODE	MXL	MAX. FIXTURE THICKNESS	DRILL Ø	HOLE DEPTH MIN.	MIN. ANCHOR DEPTH	INSTALLATION KEY	TORQUE (NM)	AXIS LETTER	Ø ELEMENT TO FIX	MIN. SUBSTRATE THICKNESS	MIN. DISTANCE TO EDGE "A"	MIN. DISTANCE FROM AXIS "B"	TENSION LOAD NON-CRACKED CONCRETE	SHEAR LOAD NON-CRACKED CONCRETE	TENSION LOAD CRACKED CONCRETE	SHEAR LOAD CRACKED CONCRETE
AP08050	M8 x 50	2	8	40	37	13	20	A	9	100	72	144	182	392	130	275
AP08075	M8 x 75	9	8	60	55	13	20	C	9	100	72	144	364	641	202	556
AP08095	M8 x 95	29	8	60	55	13	20	E	9	100	72	144	364	641	202	556
AP08115	M8 x 115	49	8	60	55	13	20	G	9	100	72	144	364	641	202	556
AP10090	M10 x 90	10	10	75	68	17	40	E	12	120	90	180	777	1014	437	1014
AP10105	M10 x 105	25	10	75	68	17	40	F	12	120	90	180	777	1014	437	1014
AP10115	M10 x 115	35	10	75	68	17	40	G	12	120	90	180	777	1014	437	1014
AP10135	M10 x 135	55	10	75	68	17	40	H	12	120	90	180	777	1014	437	1014
AP10165	M10 x 165	85	10	75	68	17	40	K	12	120	90	180	777	1014	437	1014
AP10185	M10 x 185	105	10	75	68	17	40	L	12	120	90	180	777	1014	437	1014
AP12080	M12 x 80	4	12	65	60	19	60	D	14	100	105	210	585	1474	417	1182
AP12100	M12 x 100	4	12	85	80	19	60	E	14	140	105	210	971	1474	582	1474
AP12110	M12 x 110	14	12	85	80	19	60	F	14	140	105	210	971	1474	582	1474
AP12120	M12 x 120	24	12	85	80	19	60	G	14	140	105	210	971	1474	582	1474
AP12130	M12 x 130	34	12	85	80	19	60	H	14	140	105	210	971	1474	582	1474
AP12150	M12 x 150	54	12	85	80	19	60	I	14	140	105	210	971	1474	582	1474
AP12180	M12 x 180	84	12	85	80	19	60	L	14	140	105	210	971	1474	582	1474
AP12200	M12 x 200	104	12	85	80	19	60	M	14	140	105	210	971	1474	582	1474
AP16145	M16 x 145	28	16	105	97	24	100	I	18	170	128	255	1699	2744	1214	2620
AP16175	M16 x 175	58	16	105	97	24	100	K	18	170	128	255	1699	2744	1214	2620
AP16220	M16 x 220	103	16	105	97	24	100	O	18	170	128	255	1699	2744	1214	2620
AP16250	M16 x 250	133	16	105	97	24	100	Q	18	170	128	255	1699	2744	1214	2620
AP20170	M20 x 170	32	20	125	114	30	200	K	22	200	150	300	2388	4258	1456	3343
AP20200	M20 x 200	62	20	125	114	30	200	N	22	200	150	300	2388	4258	1456	3343
AP24205	M24 x 205	35	24	155	143	36	250	N	26	250	188	375	2023	4934	1214	4672
AP24235	M24 x 235	65	24	155	143	36	250	P	26	250	188	375	2023	4934	1214	4672

MTP-A4

Opt.1 ETA Assessed. A4 Stainless steel shaft. A4 Stainless steel clip

CODE	MXL	MAX. FIXTURE THICKNESS	DRILL Ø	HOLE DEPTH MIN.	MIN. ANCHOR DEPTH	INSTALLATION KEY	TORQUE (NM)	AXIS LETTER	Ø ELEMENT TO FIX	MIN. SUBSTRATE THICKNESS	MIN. DISTANCE TO EDGE "A"	MIN. DISTANCE FROM AXIS "B"	TENSION LOAD NON-CRACKED CONCRETE	SHEAR LOAD NON-CRACKED CONCRETE	TENSION LOAD CRACKED CONCRETE	SHEAR LOAD CRACKED CONCRETE
APA408075	M8 x 75	9	8	60	55	13	15	C	9	100	144	72	582	693	413	556
APA408095	M8 x 95	29	8	60	55	13	15	E	9	100	144	72	582	693	413	556
APA408115	M8 x 115	49	8	60	55	13	15	G	9	100	144	72	582	693	413	556
APA408135	M8 x 135	69	8	60	55	13	15	H	9	100	144	72	582	693	413	556
APA410090	M10 x 90	10	10	75	68	17	30	E	12	120	180	90	777	1101	413	556
APA410105	M10 x 105	25	10	75	68	17	30	F	12	120	180	90	777	1101	413	556
APA410115	M10 x 115	35	10	75	68	17	30	G	12	120	180	90	777	1101	680	1101
APA410135	M10 x 135	55	10	75	68	17	30	H	12	120	180	90	777	1101	680	1101
APA410165	M10 x 165	85	10	75	68	17	30	K	12	120	180	90	777	1101	680	1101
APA410185	M10 x 185	105	10	75	68	17	30	L	12	120	180	90	777	1101	680	1101
APA412110	M12 x 110	14	12	85	80	19	60	F	14	140	210	105	890	1596	769	1596
APA412120	M12 x 120	24	12	85	80	19	60	G	14	140	210	105	890	1596	769	1596
APA412130	M12 x 130	34	12	85	80	19	60	H	14	140	210	105	890	1596	769	1596
APA412150	M12 x 150	54	12	85	80	19	60	I	14	140	210	105	890	1596	769	1596
APA412180	M12 x 180	84	12	85	80	19	60	L	14	140	210	105	890	1596	769	1596
APA412200	M12 x 200	104	12	85	80	19	60	M	14	140	210	105	890	1596	769	1596
APA416125	M16 x 125	8	16	105	97	24	100	G	18	170	255	128	890	1596	769	1596
APA416145	M16 x 145	28	16	105	97	24	100	I	18	170	255	128	1559	3204	1092	2620
APA416175	M16 x 175	58	16	105	97	24	100	K	18	170	255	128	1559	3204	1092	2620
APA416190	M16 x 190	73	16	105	97	24	100	L	18	170	255	128	1559	3204	1092	2620
APA416220	M16 x 220	103	16	105	97	24	100	O	18	170	255	128	1559	3204	1092	2620
APA420200	M20 x 200	62	20	125	114	30	200	M	22	200	300	150	1990	4776	1393	3343
APA420240	M20 x 240	102	20	125	114	30	200	P	22	200	300	150	1990	4776	1393	3343
APA420285	M20 x 285	147	20	125	114	30	200	S	22	200	300	150	1990	4776	1393	3343

MTP-X

Opt.1 ETA Assessed. Zinc-plated shaft. ATLANTIS C3-L clip

CODE	MXL	MAX. FIXTURE THICKNESS	DRILL Ø	HOLE DEPTH MIN.	MIN. ANCHOR DEPTH	INSTALLATION KEY	TORQUE (NM)	AXIS LETTER	Ø ELEMENT TO FIX	MIN. SUBSTRATE THICKNESS	MIN. DISTANCE TO EDGE "A"	MIN. DISTANCE FROM AXIS "B"	TENSION LOAD NON-CRACKED CONCRETE	SHEAR LOAD NON-CRACKED CONCRETE	TENSION LOAD CRACKED CONCRETE	SHEAR LOAD CRACKED CONCRETE
APX08050	M8 x 50	2	8	40	37	13	15	A	9	100	72	144	182	392	130	275
APX08075	M8 x 75	9	8	60	55	13	15	C	9	100	72	144	364	641	243	556
APX08080	M8 x 80	14	8	60	55	13	15	D	9	100	72	144	364	641	243	556
APX08095	M8 x 95	29	8	60	55	13	15	E	9	100	72	144	364	641	243	556
APX08115	M8 x 115	49	8	60	55	13	15	G	9	100	72	144	364	641	243	556
APX10090	M10 x 90	10	10	75	68	17	40	E	12	120	90	180	777	1014	437	1014
APX10105	M10 x 105	25	10	75	68	17	40	F	12	120	90	180	777	1014	437	1014
APX10115	M10 x 115	35	10	75	68	17	40	G	12	120	90	180	777	1014	437	1014
APX10135	M10 x 135	55	10	75	68	17	40	H	12	120	90	180	777	1014	437	1014
APX10165	M10 x 165	85	10	75	68	17	40	K	12	120	90	180	777	1014	437	1014
APX10185	M10 x 185	105	10	75	68	17	40	L	12	120	90	180	777	1014	437	1014
APX12080	M12 x 80	4	12	65	60	19	60	D	14	100	105	210	488	1474	348	1182
APX12100	M12 x 100	4	12	85	80	19	60	E	14	140	105	210	1214	1474	777	1474
APX12110	M12 x 110	14	12	85	80	19	60	F	14	140	105	210	1214	1474	777	1474
APX12120	M12 x 120	24	12	85	80	19	60	G	14	140	105	210	1214	1474	777	1474
APX12130	M12 x 130	34	12	85	80	19	60	H	14	140	105	210	1214	1474	777	1474
APX12150	M12 x 150	54	12	85	80	19	60	I	14	140	105	210	1214	1474	777	1474
APX12180	M12 x 180	84	12	85	80	19	60	L	14	140	105	210	1214	1474	777	1474
APX12200	M12 x 200	104	12	85	80	19	60	M	14	140	105	210	1214	1474	777	1474
APX12220	M12 x 220	124	12	85	80	19	60	O	14	140	105	210	1214	1474	777	1474
APX12255	M12 x 255	159	12	85	80	19	60	R	14	140	105	210	1214	1474	777	1474
APX16145	M16 x 145	28	16	105	97	24	100	I	18	170	128	255	1699	2744	1214	2620
APX16175	M16 x 175	58	16	105	97	24	100	K	18	170	128	255	1699	2744	1214	2620
APX16220	M16 x 220	103	16	105	97	24	100	O	18	170	128	255	1699	2744	1214	2620
APX16250	M16 x 250	133	16	105	97	24	100	Q	18	170	128	255	1699	2744	1214	2620
APX20170	M20 x 170	32	20	125	114	30	200	K	22	200	150	300	2388	4258	1456	3343
APX20200	M20 x 200	62	20	125	114	30	200	M	22	200	150	300	2388	4258	1456	3343

MTP-G

Opt.1 ETA Assessed. ATLANTIS C3-L shaft. A4 Stainless steel clip

CODE	MXL	MAX. FIXTURE THICKNESS	DRILL Ø	HOLE DEPTH MIN.	MIN. ANCHOR DEPTH	INSTALLATION KEY	TORQUE (NM)	AXIS LETTER	Ø ELEMENT TO FIX	MIN. SUBSTRATE THICKNESS	MIN. DISTANCE TO EDGE "A"	MIN. DISTANCE FROM AXIS "B"	TENSION LOAD NON-CRACKED CONCRETE	SHEAR LOAD NON-CRACKED CONCRETE	TENSION LOAD CRACKED CONCRETE	SHEAR LOAD CRACKED CONCRETE
APG06060	M6 x 60	10	6	50	46	10	7	B	7	100	60	120	243	352	-	-
APG06070	M6 x 70	20	6	50	46	10	7	C	7	100	60	120	243	352	-	-
APG06100	M6 x 100	50	6	50	46	10	7	E	7	100	60	120	243	352	-	-
APG08050	M8 x 50	2	8	40	37	13	15	A	9	100	72	144	182	392	130	275
APG08060	M8 x 60	12	8	40	37	13	15	B	9	100	72	144	182	392	130	275
APG08075	M8 x 75	9	8	60	55	13	15	C	9	100	72	144	364	641	243	556
APG08095	M8 x 95	29	8	60	55	13	15	E	9	100	72	144	364	641	243	556
APG08115	M8 x 115	49	8	60	55	13	15	G	9	100	72	144	364	641	243	556
APG10070	M10 x 70	5	10	60	53	17	40	C	12	100	90	180	325	1014	232	1009
APG10090	M10 x 90	10	10	75	68	17	40	E	12	120	90	180	777	1014	437	1014
APG10105	M10 x 105	25	10	75	68	17	40	F	12	120	90	180	777	1014	437	1014
APG10115	M10 x 115	35	10	75	68	17	40	G	12	120	90	180	777	1014	437	1014
APG10135	M10 x 135	55	10	75	68	17	40	H	12	120	90	180	777	1014	437	1014
APG10165	M10 x 165	85	10	75	68	17	40	K	12	120	90	180	777	1014	437	1014
APG10185	M10 x 185	105	10	75	68	17	40	L	12	120	90	180	777	1014	437	1014
APG12080	M12 x 80	4	12	65	60	19	60	D	14	100	105	210	585	1474	417	1182
APG12110	M12 x 110	14	12	85	80	19	60	F	14	140	105	210	1399	1474	777	1474
APG12130	M12 x 130	34	12	85	80	19	60	H	14	140	105	210	1399	1474	777	1474
APG12150	M12 x 150	54	12	85	80	19	60	I	14	140	105	210	1399	1474	777	1474
APG12180	M12 x 180	84	12	85	80	19	60	L	14	140	105	210	1399	1474	777	1474
APG12200	M12 x 200	104	12	85	80	19	60	M	14	140	105	210	1399	1474	777	1474
APG16125	M16 x 125	8	16	105	97	24	100	G	18	170	128	255	1699	2744	1214	2620
APG16145	M16 x 145	28	16	105	97	24	100	I	18	170	128	255	1699	2744	1214	2620
APG16175	M16 x 175	58	16	105	97	24	100	K	18	170	128	255	1699	2744	1214	2620
APG16220	M16 x 220	103	16	105	97	24	100	O	18	170	128	255	1699	2744	1214	2620
APG20170	M20 x 170	32	20	125	114	30	200	K	22	200	150	300	2388	4258	1456	3343
APG20200	M20 x 200	62	20	125	114	30	200	M	22	200	150	300	2388	4258	1456	3343

MTH

Through bolt anchor for heavy loads in uncracked concrete

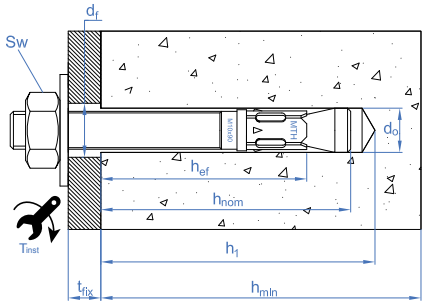

MTH

Opt.7 ETA Assessed. Zinc-plated shaft. Zinc-plated clip

CODE	MXL	MAX. FIXTURE THICKNESS	DRILL Ø	HOLE DEPTH MIN.	MIN. ANCHOR DEPTH	INSTALLATION KEY	TORQUE (NM)	AXIS LETTER	Ø ELEMENT TO FIX	MIN. SUBSTRATE THICKNESS	MIN. DISTANCE TO EDGE "A"	MIN. DISTANCE FROM AXIS "B"	TENSION LOAD NON-CRACKED CONCRETE	SHEAR LOAD NON-CRACKED CONCRETE
AH06060	M6 x 60	2	6	55	50	10	7	B	7	100	60	120	385	297
AH06070	M6 x 70	12	6	55	50	10	7	C	7	100	60	120	385	297
AH06080	M6 x 80	22	6	55	50	10	7	D	7	100	60	120	385	297
AH06090	M6 x 90	32	6	55	50	10	7	E	7	100	60	120	385	297
AH06100	M6 x 100	42	6	55	50	10	7	E	7	100	60	120	385	297
AH06110	M6 x 110	52	6	55	50	10	7	F	7	100	60	120	385	297
AH06120	M6 x 120	62	6	55	50	10	7	G	7	100	60	120	385	297
AH06130	M6 x 130	72	6	55	50	10	7	H	7	100	60	120	385	297
AH06140	M6 x 140	82	6	55	50	10	7	I	7	100	60	120	385	297
AH06150	M6 x 150	92	6	55	50	10	7	I	7	100	60	120	385	297
AH06160	M6 x 160	102	6	55	50	10	7	J	7	100	60	120	385	297
AH06170	M6 x 170	112	6	55	50	10	7	K	7	100	60	120	385	297
AH06180	M6 x 180	122	6	55	50	10	7	L	7	100	60	120	385	297
AH08060	M8 x 60	3	8	50	50	13	20	B	9	100	53	105	485	494
AH08075	M8 x 75	5	8	65	60	13	20	C	9	100	72	144	676	542
AH08090	M8 x 90	20	8	65	60	13	20	E	9	100	72	144	676	542
AH08100	M8 x 100	30	8	65	60	13	20	E	9	100	72	144	676	542
AH08115	M8 x 115	45	8	65	60	13	20	G	9	100	72	144	676	542
AH08120	M8 x 120	50	8	65	60	13	20	G	9	100	72	144	676	542
AH08130	M8 x 130	60	8	65	60	13	20	H	9	100	72	144	676	542
AH08155	M8 x 155	85	8	65	60	13	20	J	9	100	72	144	676	542
AH10070	M10 x 70	3	10	60	54	17	35	C	12	100	63	126	650	650
AH10080	M10 x 80	13	10	60	54	17	35	D	12	100	63	126	650	650
AH10090	M10 x 90	10	10	75	67	17	35	E	12	110	83	165	922	856
AH10100	M10 x 100	20	10	75	67	17	35	E	12	110	83	165	922	856
AH10120	M10 x 120	40	10	75	67	17	35	G	12	110	83	165	922	856
AH10140	M10 x 140	60	10	75	67	17	35	H	12	110	83	165	922	856
AH10150	M10 x 150	70	10	75	67	17	35	I	12	110	83	165	922	856
AH10160	M10 x 160	80	10	75	67	17	35	J	12	110	83	165	922	856
AH10170	M10 x 170	90	10	75	67	17	35	K	12	110	83	165	922	856
AH10210	M10 x 210	130	10	75	67	17	35	N	12	110	83	165	922	856
AH10230	M10 x 230	150	10	75	67	17	35	P	12	110	83	165	922	856
AH12090	M12 x 90	13	12	70	60	19	60	E	14	100	75	150	844	844
AH12100	M12 x 100	8	12	85	77	19	60	E	14	130	75	150	1251	1200
AH12110	M12 x 110	18	12	85	77	19	60	F	14	130	98	195	1251	1200
AH12120	M12 x 120	28	12	85	77	19	60	G	14	130	98	195	1251	1200
AH12130	M12 x 130	38	12	85	77	19	60	H	14	130	98	195	1251	1200
AH12140	M12 x 140	48	12	85	77	19	60	H	14	130	98	195	1251	1200
AH12160	M12 x 160	68	12	85	77	19	60	J	14	130	98	195	1251	1200
AH12180	M12 x 180	88	12	85	77	19	60	L	14	130	98	195	1251	1200
AH12200	M12 x 200	108	12	85	77	19	60	M	14	130	98	195	1251	1200
AH12220	M12 x 220	128	12	85	77	19	60	O	14	130	98	195	1251	1200
AH12250	M12 x 250	158	12	85	77	19	60	Q	14	130	98	195	1251	1200
AH14120	M14 x 120	12	14	100	91	22	90	G	16	150	113	225	1551	1637
AH14145	M14 x 145	37	14	100	91	22	90	I	16	150	113	225	1551	1637
AH14170	M14 x 170	62	14	100	91	22	90	K	16	150	113	225	1551	1637
AH14220	M14 x 220	112	14	100	91	22	90	O	16	150	113	225	1551	1637
AH14250	M14 x 250	142	14	100	91	22	90	Q	16	150	113	225	1551	1637
AH16125	M16 x 125	3	16	110	104	24	120	G	18	168	126	252	1887	2237
AH16145	M16 x 145	23	16	110	104	24	120	I	18	168	126	252	1887	2237
AH16170	M16 x 170	48	16	110	104	24	120	K	18	168	126	252	1887	2237
AH16220	M16 x 220	98	16	110	104	24	120	O	18	168	126	252	1887	2237
AH16250	M16 x 250	128	16	110	104	24	120	Q	18	168	126	252	1887	2237
AH16280	M16 x 280	158	16	110	104	24	120	S	18	168	126	252	1887	2237

CODE	MXL	MAX. FIXTURE THICKNESS	DRILL Ø	HOLE DEPTH MIN.	MIN. ANCHOR DEPTH	INSTALLATION KEY	TORQUE (NM)	AXIS LETTER	Ø ELEMENT TO FIX	MIN. SUBSTRATE THICKNESS	MIN. DISTANCE TO EDGE "A"	MIN. DISTANCE FROM AXIS "B"	TENSION LOAD NON-CRACKED CONCRETE	SHEAR LOAD NON-CRACKED CONCRETE
AH20170	M20 x 170	23	20	135	125	30	240	K	22	206	155	309	2496	3279
AH20220	M20 x 220	73	20	135	125	30	240	O	22	206	155	309	2496	3279
AH20270	M20 x 270	123	20	135	125	30	240	S	22	206	155	309	2496	3279

MTH-A4

Opt.7 ETA Assessed. A4 Stainless steel shaft. A4 Stainless steel clip

CODE	MXL	MAX. FIXTURE THICKNESS	DRILL Ø	HOLE DEPTH MIN.	MIN. ANCHOR DEPTH	INSTALLATION KEY	TORQUE (NM)	AXIS LETTER	Ø ELEMENT TO FIX	MIN. SUBSTRATE THICKNESS	MIN. DISTANCE TO EDGE "A"	MIN. DISTANCE FROM AXIS "B"	TENSION LOAD NON-CRACKED CONCRETE	SHEAR LOAD NON-CRACKED CONCRETE
MIA406045	M6 x 45	1	6	40	35	10	7	A	7	100	40	75	298	287
MIA406060	M6 x 60	2	6	55	50	10	7	B	7	100	60	120	438	287
MIA406080	M6 x 80	22	6	55	50	10	7	D	7	100	60	120	438	287
MIA408050	M8 x 50	4	8	40	35	13	20	A	9	100	40	75	219	263
MIA408075	M8 x 75	5	8	65	60	13	20	C	9	100	72	144	582	522
MIA408090	M8 x 90	20	8	65	60	13	20	E	9	100	72	144	582	522
MIA408115	M8 x 115	45	8	65	60	13	20	G	9	100	72	144	582	522
MIA410070	M10 x 70	3	10	60	54	17	35	C	12	100	60	120	485	650
MIA410090	M10 x 90	10	10	75	67	17	35	E	12	110	83	165	647	834
MIA410120	M10 x 120	40	10	75	67	17	35	G	12	110	83	165	647	834
MIA410150	M10 x 150	70	10	75	67	17	35	I	12	110	83	165	647	834
MIA412075	M12 x 75	5	12	60	55	19	60	C	14	100	65	130	561	673
MIA412090	M12 x 90	13	12	70	62	19	60	D	14	100	75	90	647	844
MIA412110	M12 x 110	12	12	85	77	19	60	F	14	130	98	195	1011	1207
MIA412140	M12 x 140	42	12	85	77	19	60	I	14	130	98	195	1011	1207
MIA416090	M16 x 90	4	16	75	69	24	120	D	18	100	75	150	683	819
MIA416145	M16 x 145	23	16	110	104	24	120	I	18	168	126	252	1416	2256
MIA416170	M16 x 170	48	16	110	104	24	120	K	18	168	126	252	1416	2256
MIA420120	M20 x 120	5	20	105	93	30	240	G	22	145	110	225	1190	2857
MIA420170	M20 x 170	23	20	135	125	30	240	K	22	206	155	309	2023	3521
MIA420220	M20 x 220	73	20	135	125	30	240	O	22	206	155	309	2023	3521

MTH-A2

Opt.7 ETA Assessed. A2 Stainless steel shaft. A2 Stainless steel clip

CODE	MXL	MAX. FIXTURE THICKNESS	DRILL Ø	HOLE DEPTH MIN.	MIN. ANCHOR DEPTH	INSTALLATION KEY	TORQUE (NM)	AXIS LETTER	Ø ELEMENT TO FIX	MIN. SUBSTRATE THICKNESS	MIN. DISTANCE TO EDGE "A"	MIN. DISTANCE FROM AXIS "B"	TENSION LOAD NON-CRACKED CONCRETE	SHEAR LOAD NON-CRACKED CONCRETE
MI06045	M6 x 45	1	6	40	35	10	7	A	7	100	40	75	298	287
MI06060	M6 x 60	2	6	55	50	10	7	B	7	100	60	120	438	287
MI06080	M6 x 80	22	6	55	50	10	7	D	7	100	60	120	438	287
MI06120	M6 x 120	62	6	55	50	10	7	G	7	100	60	120	438	287
MI06140	M6 x 140	82	6	55	50	10	7	I	7	100	60	120	438	287
MI06160	M6 x 160	102	6	55	50	10	7	J	7	100	60	120	438	287
MI06170	M6 x 170	112	6	55	50	10	7	K	7	100	60	120	438	287
MI06180	M6 x 180	122	6	55	50	10	7	L	7	100	60	120	438	287
MI08050	M8 x 50	4	8	40	35	13	20	A	9	100	40	75	219	263
MI08075	M8 x 75	5	8	65	60	13	20	C	9	100	72	144	582	522
MI08090	M8 x 90	20	8	65	60	13	20	E	9	100	72	144	582	522
MI08115	M8 x 115	45	8	65	60	13	20	G	9	100	72	144	582	522
MI10070	M10 x 70	3	10	60	54	17	35	C	12	100	60	120	485	650
MI10090	M10 x 90	10	10	75	67	17	35	E	12	110	83	165	647	834
MI10120	M10 x 120	40	10	75	67	17	35	G	12	110	83	165	647	834
MI10150	M10 x 150	70	10	75	67	17	35	I	12	110	83	165	647	834
MI12075	M12 x 75	5	12	60	55	19	60	C	14	100	65	130	561	672
MI12090	M12 x 90	13	12	70	62	19	60	D	14	120	75	150	647	844
MI12110	M12 x 110	18	12	85	77	19	60	F	14	130	98	195	1011	1207
MI12140	M12 x 140	48	12	85	77	19	60	I	14	130	98	195	1011	1207
MI16090	M16 x 90	4	16	75	69	24	120	D	18	100	75	150	683	819
MI16145	M16 x 145	23	16	110	104	24	120	I	18	168	126	252	1416	2256
MI16170	M16 x 170	48	16	110	104	24	120	K	18	168	126	252	1416	2256
MI20120	M20 x 120	5	20	105	93	30	240	G	22	145	110	225	1190	2857
MI20170	M20 x 170	23	20	135	125	30	240	K	22	206	155	309	2023	3521
MI20220	M20 x 220	73	20	135	125	30	240	O	22	206	155	309	2023	3521

MTA

Through bolt anchor for heavy loads

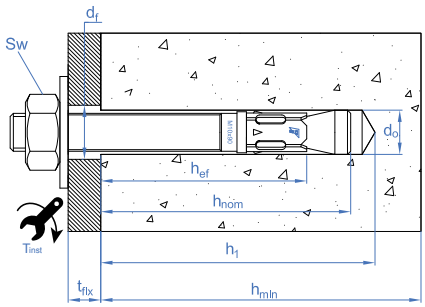

MTA

Zinc-plated shaft. Zinc-plated clip

CODE	MXL	MAX. FIXTURE THICKNESS	DRILL Ø	HOLE DEPTH MIN.	MIN. ANCHOR DEPTH	INSTALLATION KEY	TORQUE (NM)	Ø ELEMENT TO FIX	MIN. SUBSTRATE THICKNESS	MIN. DISTANCE TO EDGE "A"	MIN. DISTANCE FROM AXIS "B"	TENSION LOAD NON-CRACKED CONCRETE	SHEAR LOAD NON-CRACKED CONCRETE
AM06045	M6 x 45	1	6	40	35	10	7	7	100	40	75	298	297
AM06055	M6 x 55	11	6	40	35	10	7	7	100	40	75	298	297
AM06060	M6 x 60	2	6	55	50	10	7	7	100	60	120	385	297
AM06065	M6 x 65	7	6	55	50	10	7	7	100	60	120	385	297
AM06070	M6 x 70	12	6	55	50	10	7	7	100	60	120	385	297
AM06080	M6 x 80	22	6	55	50	10	7	7	100	60	120	385	297
AM06085	M6 x 85	27	6	55	50	10	7	7	100	60	120	385	297
AM06090	M6 x 90	32	6	55	50	10	7	7	100	60	120	385	297
AM06100	M6 x 100	42	6	55	50	10	7	7	100	60	120	385	297
AM06110	M6 x 110	52	6	55	50	10	7	7	100	60	120	385	297
AM06120	M6 x 120	62	6	55	50	10	7	7	100	60	120	385	297
AM06130	M6 x 130	72	6	55	50	10	7	7	100	60	120	385	297
AM06140	M6 x 140	82	6	55	50	10	7	7	100	60	120	385	297
AM06150	M6 x 150	92	6	55	50	10	7	7	100	60	120	385	297
AM06160	M6 x 160	102	6	55	50	10	7	7	100	60	120	385	297
AM06170	M6 x 170	112	6	55	50	10	7	7	100	60	120	385	297
AM06180	M6 x 180	122	6	55	50	10	7	7	100	60	120	385	297
AM08050	M8 x 50	4	8	40	35	13	20	9	100	40	75	263	263
AM08060	M8 x 60	3	8	50	47	13	20	9	100	53	105	485	494
AM08065	M8 x 65	8	8	50	47	13	20	9	100	53	105	485	494
AM08075	M8 x 75	5	8	65	60	13	20	9	100	72	144	676	542
AM08090	M8 x 90	20	8	65	60	13	20	9	100	72	144	676	542
AM08115	M8 x 115	45	8	65	60	13	20	9	100	72	144	676	542
AM08120	M8 x 120	50	8	65	60	13	20	9	100	72	144	676	542
AM08130	M8 x 130	60	8	65	60	13	20	9	100	72	144	676	542
AM08155	M8 x 155	85	8	65	60	13	20	9	100	72	144	676	542
AM10065	M10 x 65	1	10	55	52	17	35	12	100	60	120	604	604
AM10070	M10 x 70	3	10	60	54	17	35	12	100	63	125	650	650
AM10080	M10 x 80	13	10	60	54	17	35	12	100	63	125	667	667
AM10090	M10 x 90	10	10	75	67	17	35	12	110	83	165	922	856
AM10100	M10 x 100	20	10	75	67	17	35	12	110	83	165	922	856
AM10120	M10 x 120	40	10	75	67	17	35	12	110	83	165	922	856
AM10140	M10 x 140	60	10	75	67	17	35	12	110	83	165	922	856
AM10150	M10 x 150	70	10	75	67	17	35	12	110	83	165	922	856
AM10160	M10 x 160	80	10	75	67	17	35	12	110	83	165	922	856
AM10170	M10 x 170	90	10	75	67	17	35	12	110	83	165	922	856
AM10210	M10 x 210	130	10	75	67	17	35	12	110	83	165	922	856
AM10230	M10 x 230	150	10	75	67	17	35	12	110	83	165	922	856
AM12075	M12 x 75	5	12	60	55	19	60	14	100	65	130	673	673
AM12080	M12 x 80	3	12	70	62	19	60	14	100	75	150	844	844
AM12090	M12 x 90	13	12	70	62	19	60	14	100	75	150	844	844
AM12100	M12 x 100	8	12	85	77	19	60	14	130	98	195	1251	1200
AM12110	M12 x 110	18	12	85	77	19	60	14	130	98	195	1251	1200
AM12120	M12 x 120	28	12	85	77	19	60	14	130	98	195	1251	1200
AM12140	M12 x 140	48	12	85	77	19	60	14	130	98	195	1251	1200
AM12160	M12 x 160	68	12	85	77	19	60	14	130	98	195	1251	1200

CODE	MXL	MAX. FIXTURE THICKNESS	DRILL Ø	HOLE DEPTH MIN.	MIN. ANCHOR DEPTH	INSTALLATION KEY	TORQUE (NM)	Ø ELEMENT TO FIX	MIN. SUBSTRATE THICKNESS	MIN. DISTANCE TO EDGE "A"	MIN. DISTANCE FROM AXIS "B"	TENSION LOAD NON-CRACKED CONCRETE	SHEAR LOAD NON-CRACKED CONCRETE
AM12180	M12 x 180	88	12	85	77	19	60	14	130	98	195	1251	1200
AM12220	M12 x 220	128	12	85	77	19	60	14	130	98	195	1251	1200
AM12250	M12 x 250	158	12	85	77	19	60	14	130	98	195	1251	1200
AM14080	M14 x 80	5	14	65	59	22	90	16	100	65	130	650	650
AM14100	M14 x 100	5	14	85	69	22	90	16	125	95	190	1166	1637
AM14120	M14 x 120	12	14	100	91	22	90	16	150	113	225	1551	1637
AM14145	M14 x 145	37	14	100	91	22	90	16	150	113	225	1551	1637
AM14170	M14 x 170	62	14	100	91	22	90	16	150	113	225	1551	1637
AM14220	M14 x 220	112	14	100	91	22	90	16	150	113	225	1551	1637
AM14250	M14 x 250	142	14	100	91	22	90	16	150	113	225	1551	1637
AM16090	M16 x 90	4	16	75	69	24	120	18	100	75	150	819	819
AM16110	M16 x 110	7	16	75	69	24	120	18	100	75	150	1838	2237
AM16125	M16 x 125	3	16	110	104	24	120	18	168	126	252	1838	2237
AM16145	M16 x 145	23	16	110	104	24	120	18	168	126	252	1838	2237
AM16170	M16 x 170	48	16	110	104	24	120	18	168	126	252	1838	2237
AM16220	M16 x 220	98	16	110	104	24	120	18	168	126	252	1838	2237
AM16250	M16 x 250	128	16	110	104	24	120	18	168	126	252	1838	2237
AM16280	M16 x 280	158	16	110	104	24	120	18	168	126	252	1838	2237
AM20120	M20 x 120	5	20	105	93	30	240	22	145	110	225	1429	2857
AM20170	M20 x 170	23	20	135	125	30	240	22	206	155	309	2496	3279
AM20220	M20 x 220	73	20	135	125	30	240	22	206	155	309	2496	3279
AM20270	M20 x 270	123	20	135	125	30	240	22	206	155	309	2496	3279
AM24180	M24 x 180	10	24	155	143	36	250	26	250	200	400	2023	4934
AM24260	M24 x 260	80	24	155	143	36	250	26	250	200	400	2023	4934

TH

Self-tapping concrete screwbolt

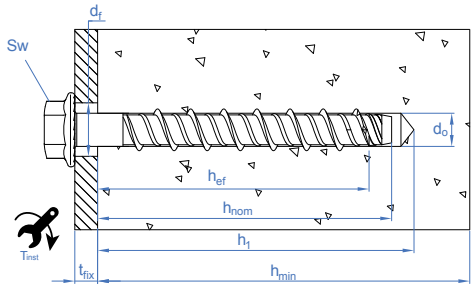

THE

Hexagon head. ATLANTIS C3-H coating. Opt.1 ETA Assessed

CODE	MXL	LENGTH	DRILL Ø	HOLE DEPTH MIN.	MIN. SUBSTRATE THICKNESS	Ø ELEMENT TO FIX	MIN. ANCHOR DEPTH	MAX. FIXTURE THICKNESS	TORQUE (NM)	MIN. DISTANCE TO EDGE "A"	MIN. DISTANCE FROM AXIS "B"	INSTALLATION KEY	TENSION LOAD NON-CRACKED CONCRETE	SHEAR LOAD NON-CRACKED CONCRETE	TENSION LOAD CRACKED CONCRETE	SHEAR LOAD CRACKED CONCRETE
THE05040	Ø5 x 40	40	5	45	80	8	35	5	8	40	80	8	326	326	228	228
THE05050	Ø5 x 50	50	5	55	80	8	45	5	8	53	105	8	494	398	346	346
THE05060	Ø5 x 60	60	5	55	80	8	45	15	8	53	105	8	494	398	346	346
THE05080	Ø5 x 80	80	5	55	80	8	45	35	8	53	105	8	494	398	346	346
THE05100	Ø5 x 100	100	5	55	80	8	45	55	8	53	105	8	494	398	346	346
THE06040	Ø6 x 40	40	6	45	100	9	35	5	10	39	78	10	202	608	185	454
THE06050	Ø6 x 50	50	6	45	100	9	35	15	10	39	78	10	202	608	185	454
THE06060	Ø6 x 60	60	6	65	100	9	55	5	10	65	129	10	673	608	471	542
THE06070	Ø6 x 70	70	6	65	100	9	55	15	10	65	129	10	673	608	471	542
THE06080	Ø6 x 80	80	6	65	100	9	55	25	10	65	129	10	673	608	471	542
THE06100	Ø6 x 100	100	6	65	100	9	55	45	10	65	129	10	673	608	471	542
THE06120	Ø6 x 120	120	6	65	100	9	55	65	10	65	129	10	673	608	471	542
THE08055	Ø8 x 55	55	8	60	100	12	50	5	20	57	113	13	457	950	320	691
THE08060	Ø8 x 60	60	8	60	100	12	50	10	20	57	113	13	457	950	320	691
THE08070	Ø8 x 70	70	8	75	100	12	65	5	20	76	152	13	857	950	600	762
THE08080	Ø8 x 80	80	8	75	100	12	65	15	20	76	152	13	857	950	600	762
THE08090	Ø8 x 90	90	8	75	100	12	65	25	20	76	152	13	857	950	600	762
THE08100	Ø8 x 100	100	8	75	100	12	65	35	20	76	152	13	857	950	600	762
THE08110	Ø8 x 110	110	8	75	100	12	65	45	20	76	152	13	857	950	600	762
THE08120	Ø8 x 120	120	8	75	100	12	65	55	20	76	152	13	857	950	600	762
THE08140	Ø8 x 140	140	8	75	100	12	65	75	20	76	152	13	857	950	600	762
THE10060	Ø10 x 60	60	10	65	100	14	55	5	30	63	125	15	638	1245	447	871
THE10070	Ø10 x 70	70	10	65	100	14	55	15	30	63	125	15	638	1245	447	871
THE10080	Ø10 x 80	80	10	65	100	14	55	25	30	63	125	15	638	1245	447	871

CODE	MXL	LENGTH	DRILL Ø	HOLE DEPTH MIN.	MIN. SUBSTRATE THICKNESS	Ø ELEMENT TO FIX	MIN. ANCHOR DEPTH	MAX. FIXTURE THICKNESS	TORQUE (NM)	MIN. DISTANCE TO EDGE "A"	MIN. DISTANCE FROM AXIS "B"	INSTALLATION KEY	TENSION LOAD NON-CRACKED CONCRETE	SHEAR LOAD NON-CRACKED CONCRETE	TENSION LOAD CRACKED CONCRETE	SHEAR LOAD CRACKED CONCRETE
THE10090	Ø10 x 90	90	10	95	135	14	85	5	30	101	201	15	1310	1330	917	1330
THE10100	Ø10 x 100	100	10	95	135	14	85	15	30	101	201	15	1310	1330	917	1330
THE10120	Ø10 x 120	120	10	95	135	14	85	35	30	101	201	15	1310	1330	917	1330
THE10140	Ø10 x 140	140	10	95	135	14	85	55	30	101	201	15	1310	1330	917	1330
THE12080	Ø12 x 80	80	12	90	120	16	75	5	50	87	174	18	1055	1808	738	1720
THE12090	Ø12 x 90	90	12	90	120	16	75	15	50	87	174	18	1055	1808	738	1720
THE12110	Ø12 x 110	110	12	120	170	16	105	5	50	126	251	18	1822	1808	1275	1808
THE12130	Ø12 x 130	130	12	120	170	16	105	25	50	126	251	18	1822	1808	1275	1808
THE12150	Ø12 x 150	150	12	120	170	16	105	45	50	126	251	18	1822	1808	1275	1808
THE14080	Ø14 x 80	80	14	90	120	18	75	5	70	87	174	21	1055	2559	738	1883
THE14100	Ø14 x 100	100	14	90	120	18	75	25	70	87	174	21	1055	2559	738	1883
THE14120	Ø14 x 120	120	14	130	185	18	115	5	70	138	276	21	2107	2559	1475	2559
THE14130	Ø14 x 130	130	14	130	185	18	115	15	70	138	276	21	2107	2559	1475	2559
THE14140	Ø14 x 140	140	14	130	185	18	115	25	70	138	276	21	2107	2559	1475	2559
THE14160	Ø14 x 160	160	14	130	185	18	115	45	70	138	276	21	2107	2559	1475	2559
THE18100	Ø18 x 100	100	18	110	140	22	90	10	90	105	209	24	1384	3680	968	2576
THE18130	Ø18 x 130	130	18	110	140	22	90	40	90	105	209	24	1384	3680	968	2576
THE18160	Ø18 x 160	160	18	160	225	22	140	20	90	168	336	24	2830	3921	1981	3921
THE18180	Ø18 x 180	180	18	160	225	22	140	40	90	168	336	24	2830	3921	1981	3921
THE18200	Ø18 x 200	200	18	160	225	22	140	60	90	168	336	24	2830	3921	1981	3921

THA

Countersunk head. ATLANTIS C3-H coating. Opt.1 ETA Assessed

CODE	MXL	LENGTH	DRILL Ø	HOLE DEPTH MIN.	MIN. SUBSTRATE THICKNESS	Ø ELEMENT TO FIX	MIN. ANCHOR DEPTH	MAX. FIXTURE THICKNESS	TORQUE (NM)	MIN. DISTANCE TO EDGE "A"	MIN. DISTANCE FROM AXIS "B"	INSTALLATION KEY	TENSION LOAD NON-CRACKED CONCRETE	SHEAR LOAD NON-CRACKED CONCRETE	TENSION LOAD CRACKED CONCRETE	SHEAR LOAD CRACKED CONCRETE
THA05040	Ø5 x 40	40	5	45	80	8	35	5	8	40	80	TX25	326	326	228	228
THA05060	Ø5 x 60	60	5	55	80	8	45	15	8	53	105	TX25	494	398	346	346
THA05080	Ø5 x 80	80	5	55	80	8	45	35	8	53	105	TX25	494	398	346	346
THA05100	Ø5 x 100	100	5	55	80	8	45	55	8	53	105	TX25	494	398	346	346
THA06045	Ø6 x 45	45	6	45	100	9	35	10	10	39	78	TX30	202	608	185	454
THA06050	Ø6 x 50	50	6	45	100	9	35	15	10	39	78	TX30	202	608	185	454
THA06060	Ø6 x 60	60	6	65	100	9	55	5	10	65	129	TX30	673	608	471	542
THA06080	Ø6 x 80	80	6	65	100	9	55	25	10	65	129	TX30	673	608	471	542
THA06120	Ø6 x 120	120	6	65	100	9	55	65	10	65	129	TX30	673	608	471	542
THA06140	Ø6 x 140	140	6	65	100	9	55	85	10	65	129	TX30	673	608	471	542
THA08060	Ø8 x 60	60	8	60	100	12	50	10	20	57	113	TX45	457	950	320	691
THA08080	Ø8 x 80	80	8	75	100	12	65	15	20	76	152	TX45	857	950	600	762
THA08100	Ø8 x 100	100	8	75	100	12	65	35	20	76	152	TX45	857	950	600	762
THA08120	Ø8 x 120	120	8	75	100	12	65	55	20	76	152	TX45	857	950	600	762
THA10100	Ø10 x 100	100	10	95	135	14	85	15	30	101	201	TX50	1310	1330	600	762
THA10120	Ø10 x 120	120	10	95	135	14	85	35	30	101	201	TX50	1310	1330	600	762

THP

Pan head. ATLANTIS C3-H coating. Opt.1 ETA Assessed

CODE	MXL	LENGTH	DRILL Ø	HOLE DEPTH MIN.	MIN. SUBSTRATE THICKNESS	Ø ELEMENT TO FIX	MIN. ANCHOR DEPTH	MAX. FIXTURE THICKNESS	TORQUE (NM)	MIN. DISTANCE TO EDGE "A"	MIN. DISTANCE FROM AXIS "B"	INSTALLATION KEY	TENSION LOAD NON-CRACKED CONCRETE	SHEAR LOAD NON-CRACKED CONCRETE	TENSION LOAD CRACKED CONCRETE	SHEAR LOAD CRACKED CONCRETE
THP05040	Ø5 x 40	40	5	45	80	8	35	5	8	40	80	TX30	326	326	228	228
THP05060	Ø5 x 60	60	5	65	80	8	55	15	8	53	105	TX30	494	398	346	346
THP06040	Ø6 x 40	40	6	45	100	9	35	5	10	39	78	TX40	202	608	185	454
THP06050	Ø6 x 50	50	6	45	100	9	35	15	10	39	78	TX40	202	608	185	454
THP06060	Ø6 x 60	60	6	65	100	9	55	5	10	65	129	TX40	673	608	471	542
THP06080	Ø6 x 80	80	6	65	100	9	55	25	10	65	129	TX40	673	608	471	542
THP06100	Ø6 x 100	100	6	65	100	9	55	45	10	65	129	TX40	673	608	471	542
THP08060	Ø8 x 60	60	8	60	100	12	50	10	20	57	113	TX45	457	950	320	691
THP08080	Ø8 x 80	80	8	75	100	12	65	15	20	76	152	TX45	857	950	600	762

THT

Truss head. ATLANTIS C3-H coating. Opt.1 ETA Assessed

CODE	MXL	LENGTH	DRILL Ø	HOLE DEPTH MIN.	MIN. SUBSTRATE THICKNESS	Ø ELEMENT TO FIX	MIN. ANCHOR DEPTH	MAX. FIXTURE THICKNESS	TORQUE (NM)	MIN. DISTANCE TO EDGE "A"	MIN. DISTANCE FROM AXIS "B"	INSTALLATION KEY	TENSION LOAD NON-CRACKED CONCRETE	SHEAR LOAD NON-CRACKED CONCRETE	TENSION LOAD CRACKED CONCRETE	SHEAR LOAD CRACKED CONCRETE
THT06040	Ø6 x 40	40	6	45	100	9	35	5	10	39	78	TX30	202	608	185	454
THT06050	Ø6 x 50	50	6	45	100	9	35	15	10	39	78	TX30	202	608	185	454
THT06060	Ø6 x 60	60	6	65	100	9	55	5	10	65	129	TX30	673	608	471	542

TFE

Hexagon head.Zinc-plated coating. Opt.1 ETA Assessed

CODE	MXL	LENGTH	DRILL Ø	HOLE DEPTH MIN.	MIN. SUBSTRATE THICKNESS	Ø ELEMENT TO FIX	MIN. ANCHOR DEPTH	MAX. FIXTURE THICKNESS	TORQUE (NM)	MIN. DISTANCE TO EDGE "A"	MIN. DISTANCE FROM AXIS "B"	INSTALLATION KEY	TENSION LOAD NON-CRACKED CONCRETE	SHEAR LOAD NON-CRACKED CONCRETE	TENSION LOAD CRACKED CONCRETE	SHEAR LOAD CRACKED CONCRETE
TFE05040	Ø5 x 40	40	5	45	80	8	35	5	8	40	80	8	326	326	228	228
TFE05050	Ø5 x 50	50	5	55	80	8	45	5	8	53	105	8	494	398	346	346
TFE05060	Ø5 x 60	60	5	55	80	8	45	15	8	53	105	8	494	398	346	346
TFE05080	Ø5 x 80	80	5	55	80	8	45	35	8	53	105	8	494	398	346	346
TFE05100	Ø5 x 100	100	5	55	80	8	45	55	8	53	105	8	494	398	346	346

CODE	MXL	LENGTH	DRILL Ø	HOLE DEPTH MIN.	MIN. SUBSTRATE THICKNESS	Ø ELEMENT TO FIX	MIN. ANCHOR DEPTH	MAX. FIXTURE THICKNESS	TORQUE (NM)	MIN. DISTANCE TO EDGE "A"	MIN. DISTANCE FROM AXIS "B"	INSTALLATION KEY	TENSION LOAD NON-CRACKED CONCRETE	SHEAR LOAD NON-CRACKED CONCRETE	TENSION LOAD CRACKED CONCRETE	SHEAR LOAD CRACKED CONCRETE
TFE06040	Ø6 x 40	40	6	45	100	9	35	5	10	39	78	10	202	608	185	454
TFE06050	Ø6 x 50	50	6	45	100	9	35	15	10	39	78	10	202	608	185	454
TFE06060	Ø6 x 60	60	6	65	100	9	55	5	10	65	129	10	673	608	471	542
TFE06070	Ø6 x 70	70	6	65	100	9	55	15	10	65	129	10	673	608	471	542
TFE06080	Ø6 x 80	80	6	65	100	9	55	25	10	65	129	10	673	608	471	542
TFE06100	Ø6 x 100	100	6	65	100	9	55	45	10	65	129	10	673	608	471	542
TFE06120	Ø6 x 120	120	6	65	100	9	55	65	10	65	129	10	673	608	471	542
TFE08055	Ø8 x 55	55	8	60	100	12	50	5	20	57	113	13	457	950	320	691
TFE08060	Ø8 x 60	60	8	60	100	12	50	10	20	57	113	13	457	950	320	691
TFE08070	Ø8 x 70	70	8	75	100	12	65	5	20	76	152	13	857	950	600	762
TFE08080	Ø8 x 80	80	8	75	100	12	65	15	20	76	152	13	857	950	600	762
TFE08090	Ø8 x 90	90	8	75	100	12	65	25	20	76	152	13	857	950	600	762
TFE08100	Ø8 x 100	100	8	75	100	12	65	35	20	76	152	13	857	950	600	762
TFE08110	Ø8 x 110	110	8	75	100	12	65	45	20	76	152	13	857	950	600	762
TFE08120	Ø8 x 120	120	8	75	100	12	65	55	20	76	152	13	857	950	600	762
TFE08140	Ø8 x 140	140	8	75	100	12	65	75	20	76	152	13	857	950	600	762
TFE10060	Ø10 x 60	60	10	65	100	14	55	5	30	63	125	15	638	1245	447	871
TFE10070	Ø10 x 70	70	10	65	100	14	55	15	30	63	125	15	638	1245	447	871
TFE10080	Ø10 x 80	80	10	85	120	14	75	25	30	88	176	15	638	1245	447	871
TFE10090	Ø10 x 90	90	10	95	135	14	85	5	30	101	201	15	1310	1330	917	1330
TFE10100	Ø10 x 100	100	10	95	135	14	85	15	30	101	201	15	1310	1330	917	1330
TFE10120	Ø10 x 120	120	10	95	135	14	85	35	30	101	201	15	1310	1330	917	1330
TFE10140	Ø10 x 140	140	10	95	135	14	85	55	30	101	201	15	1310	1330	917	1330
TFE12080	Ø12 x 80	80	12	90	120	16	75	5	50	87	174	18	1055	1808	738	1720
TFE12090	Ø12 x 90	90	12	90	120	16	75	15	50	87	174	18	1055	1808	738	1720
TFE12110	Ø12 x 110	110	12	120	170	16	105	5	50	126	251	18	1822	1808	1275	1808
TFE12130	Ø12 x 130	130	12	120	170	16	105	25	50	126	251	18	1822	1808	1275	1808
TFE12150	Ø12 x 150	150	12	120	170	16	105	45	50	126	251	18	1822	1808	1275	1808
TFE14080	Ø14 x 80	80	14	90	120	18	75	5	70	87	174	21	1055	2559	738	1883
TFE14100	Ø14 x 100	100	14	90	120	18	75	25	70	87	174	21	1055	2559	738	1883
TFE14120	Ø14 x 120	120	14	130	185	18	115	5	70	138	276	21	2107	2559	1475	2559
TFE14130	Ø14 x 130	130	14	130	185	18	115	15	70	138	276	21	2107	2559	1475	2559
TFE14140	Ø14 x 140	140	14	130	185	18	115	25	70	138	276	21	2107	2559	1475	2559
TFE14160	Ø14 x 160	160	14	130	185	18	115	45	70	138	276	21	2107	2559	1475	2559
TFE18100	Ø18 x 100	100	18	110	140	22	90	10	90	105	209	24	1384	3680	968	2576
TFE18130	Ø18 x 130	130	18	110	140	22	90	40	90	105	209	24	1384	3680	968	2576
TFE18160	Ø18 x 160	160	18	160	225	22	140	20	90	168	336	24	2830	3921	1981	3921
TFE18180	Ø18 x 180	180	18	160	225	22	140	40	90	168	336	24	2830	3921	1981	3921
TFE18200	Ø18 x 200	200	18	160	225	22	140	60	90	168	336	24	2830	3921	1981	3921

TFN

Hexagon head without nut. Zinc-plated coating. Opt.1 ETA Assessed

CODE	MXL	LENGTH	DRILL Ø	HOLE DEPTH MIN.	MIN. SUBSTRATE THICKNESS	Ø ELEMENT TO FIX	MIN. ANCHOR DEPTH	MAX. FIXTURE THICKNESS	TORQUE (NM)	MIN. DISTANCE TO EDGE "A"	MIN. DISTANCE FROM AXIS "B"	INSTALLATION KEY	TENSION LOAD NON-CRACKED CONCRETE	SHEAR LOAD NON-CRACKED CONCRETE	TENSION LOAD CRACKED CONCRETE	SHEAR LOAD CRACKED CONCRETE
TFN14080	Ø14 x 80	80	14	90	120	18	75	5	70	87	174	24	1055	2559	738	1883

TFS

Stud bolt. Zinc-plated coating. Opt.1 ETA Assessed

CODE	MXL	LENGTH	DRILL Ø	HOLE DEPTH MIN.	MIN. SUBSTRATE THICKNESS	Ø ELEMENT TO FIX	MIN. ANCHOR DEPTH	MAX. FIXTURE THICKNESS	TORQUE (NM)	MIN. DISTANCE TO EDGE "A"	MIN. DISTANCE FROM AXIS "B"	INSTALLATION KEY	TENSION LOAD NON-CRACKED CONCRETE	SHEAR LOAD NON-CRACKED CONCRETE	TENSION LOAD CRACKED CONCRETE	SHEAR LOAD CRACKED CONCRETE
TFS06100	Ø6 x 100	100	6	65	100	9	55	35	10	65	129	5	673	608	471	542
TFS06120	Ø6 x 120	120	6	65	100	9	55	55	10	65	129	5	673	608	471	542
TFS08110	Ø8 x 110	110	8	75	100	12	65	32	20	76	152	7	857	950	600	762
TFS08130	Ø8 x 130	130	8	75	100	12	65	52	20	76	152	7	857	950	600	762
TFS10120	Ø10 x 120	120	10	85	120	14	75	27	30	88	176	8	1068	1330	748	987
TFS10140	Ø10 x 140	140	10	85	120	14	75	47	30	88	176	8	1068	1330	748	987

TFF

Hanger female. Zinc-plated coating. Opt.1 ETA Assessed

CODE	MXL	LENGTH	DRILL Ø	HOLE DEPTH MIN.	MIN. SUBSTRATE THICKNESS	Ø ELEMENT TO FIX	MIN. ANCHOR DEPTH	TORQUE (NM)	MIN. DISTANCE TO EDGE "A"	MIN. DISTANCE FROM AXIS "B"	INSTALLATION KEY	TENSION LOAD NON-CRACKED CONCRETE	SHEAR LOAD NON-CRACKED CONCRETE	TENSION LOAD CRACKED CONCRETE	SHEAR LOAD CRACKED CONCRETE
TFF06035	Ø6 x 35	35	6	45	100	--	35	10	39	78	13	202	608	185	454
TFF06055	Ø6 x 55	55	6	55	100	--	55	10	65	129	13	673	608	471	542

TFM

Hanger male. Zinc-plated coating. Opt.1 ETA Assessed

CODE	MXL	LENGTH	DRILL Ø	HOLE DEPTH MIN.	MIN. SUBSTRATE THICKNESS	Ø ELEMENT TO FIX	MIN. ANCHOR DEPTH	TORQUE (NM)	MIN. DISTANCE TO EDGE "A"	MIN. DISTANCE FROM AXIS "B"	INSTALLATION KEY	TENSION LOAD NON-CRACKED CONCRETE	SHEAR LOAD NON-CRACKED CONCRETE	TENSION LOAD CRACKED CONCRETE	SHEAR LOAD CRACKED CONCRETE
TFM06035	Ø6 x 35	35	6	45	100	--	35	10	39	78	13	202	608	185	454
TFM06055	Ø6 x 55	55	6	55	100	--	55	10	65	129	13	673	608	471	542

HO Concrete screw

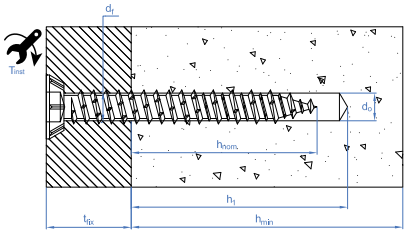

HP Flat head, TX recess. Yellow zinc-plated

CODE	MXL	MAX. FIXTURE THICKNESS	DRILL Ø	HOLE DEPTH MIN.	MIN. ANCHOR DEPTH	INSTALLATION KEY	TORQUE (NM)	Ø ELEMENT TO FIX	MIN. SUBSTRATE THICKNESS	TENSION LOAD NON-CRACKED CONCRETE	SHEAR LOAD NON-CRACKED CONCRETE
HP75072	7,5 x 72	32	6	45	40	TX30	20	9	100	100	-
HP75092	7,5 x 92	52	6	45	40	TX30	20	9	100	100	-
HP75112	7,5 x 112	72	6	45	40	TX30	20	9	100	100	-
HP75132	7,5 x 132	92	6	45	40	TX30	20	9	100	100	-
HP75152	7,5 x 152	112	6	45	40	TX30	20	9	100	100	-
HP75182	7,5 x 182	142	6	45	40	TX30	20	9	100	100	-
HPZ75072	7,5 x 72	32	6	45	40	TX30	20	9	100	100	-
HPZ75092	7,5 x 92	52	6	45	40	TX30	20	9	100	100	-
HPZ75112	7,5 x 112	72	6	45	40	TX30	20	9	100	100	-
HPZ75132	7,5 x 132	92	6	45	40	TX30	20	9	100	100	-
HPZ75152	7,5 x 152	112	6	45	40	TX30	20	9	100	100	-
HPZ75182	7,5 x 182	142	6	45	40	TX30	20	9	100	100	-
HPZ75212	7,5 x 212	172	6	45	40	TX30	20	9	100	100	-

HR Cylindrical head Tx

CODE	MXL	MAX. FIXTURE THICKNESS	DRILL Ø	HOLE DEPTH MIN.	MIN. ANCHOR DEPTH	INSTALLATION KEY	TORQUE (NM)	Ø ELEMENT TO FIX	MIN. SUBSTRATE THICKNESS	MIN. DISTANCE TO EDGE "A"	MIN. DISTANCE FROM AXIS "B"	TENSION LOAD NON-CRACKED CONCRETE	SHEAR LOAD NON-CRACKED CONCRETE
HR75072	7,5 x 72	32	6	45	40	TX25	15	9	100			100	-
HR75092	7,5 x 92	52	6	45	40	TX25	15	9	100			100	-
HR75112	7,5 x 112	72	6	45	40	TX25	15	9	100			100	-
HR75132	7,5 x 132	92	6	45	40	TX25	15	9	100			100	-

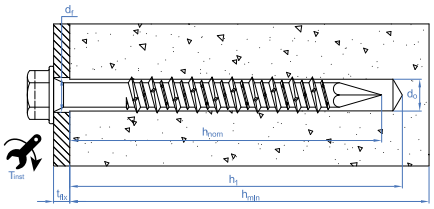

HE Screw

CODE	MXL	MAX. FIXTURE THICKNESS	DRILL Ø	HOLE DEPTH MIN.	MIN. ANCHOR DEPTH	INSTALLATION KEY	TORQUE (NM)	Ø ELEMENT TO FIX	MIN. SUBSTRATE THICKNESS	TENSION LOAD NON-CRACKED CONCRETE	SHEAR LOAD NON-CRACKED CONCRETE
HE65032	6,5 x 32	2	5	35	30	8+ranura	12	8	100	65	-
HE65045	6,5 x 45	15	5	35	30	8+ranura	12	8	100	65	-
HE65057	6,5 x 57	27	5	35	30	8+ranura	12	8	100	65	-
HE65070	6,5 x 70	40	5	35	30	8+ranura	12	8	100	65	-
HE65080	6,5 x 80	50	5	35	30	8+ranura	12	8	100	65	-
HE65100	6,5 x 100	70	5	35	30	8+ranura	12	8	100	65	-
HE65125	6,5 x 125	95	5	35	30	8+ranura	12	8	100	65	-

HE + ARVUL

Screw with vulcanized EPDM-steel washer

CODE	MXL	MAX. FIXTURE THICKNESS	DRILL Ø	HOLE DEPTH MIN.	MIN. ANCHOR DEPTH	INSTALLATION KEY	TORQUE (NM)	Ø ELEMENT TO FIX	MIN. SUBSTRATE THICKNESS	TENSION LOAD NON-CRACKED CONCRETE	SHEAR LOAD NON-CRACKED CONCRETE
HE1665032	6,5 x 32	2	5	35	30	8+ranura	12	8	100	65	-
HE1665045	6,5 x 45	15	5	35	30	8+ranura	12	8	100	65	-
HE1665057	6,5 x 57	27	5	35	30	8+ranura	12	8	100	65	-
HE1665070	6,5 x 70	40	5	35	30	8+ranura	12	8	100	65	-
HE1665080	6,5 x 80	50	5	35	30	8+ranura	12	8	100	65	-
HE1665100	6,5 x 100	70	5	35	30	8+ranura	12	8	100	65	-
HE1665125	6,5 x 125	95	5	35	30	8+ranura	12	8	100	65	-

SL

Heavy duty anchor for high perfomance in concrete

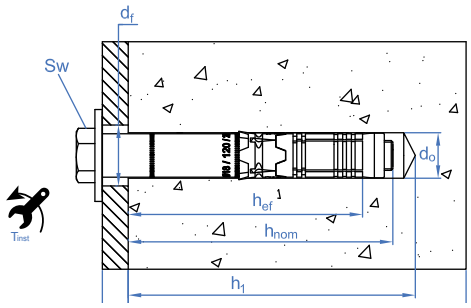

SL-PT

Opt.1 ETA Assessed. Hexagonal head

CODE	MXL	MAX. FIXTURE THICKNESS	DRILL Ø	HOLE DEPTH MIN.	MIN. ANCHOR DEPTH	INSTALLATION KEY	TORQUE (NM)	Ø ELEMENT TO FIX	MIN. SUBSTRATE THICKNESS	MIN. DISTANCE TO EDGE "A"	MIN. DISTANCE FROM AXIS "B"	TENSION LOAD NON-CRACKED CONCRETE	SHEAR LOAD NON-CRACKED CONCRETE	TENSION LOAD CRACKED CONCRETE	SHEAR LOAD CRACKED CONCRETE
SLPT10070	M6 x 70	10	10	70	59	10	15	12	100	75	150	782	844	591	591
SLPT10080	M6 x 80	20	10	70	59	10	15	12	100	75	150	782	844	591	591
SLPT10100	M6x 100	40	10	70	59	10	15	12	100	75	150	782	844	591	591
SLPT10110	M6 x 110	50	10	70	59	10	15	12	100	75	150	782	844	591	591
SLPT12080	M8 x 80	5	12	85	72	13	30	14	120	90	180	1110	1922	777	1554
SLPT12090	M8 x 90	15	12	85	72	13	30	14	120	90	180	1110	1922	777	1554
SLPT12100	M8 x 100	25	12	85	72	13	30	14	120	90	180	1110	1922	777	1554
SLPT12120	M8 x 120	45	12	85	72	13	30	14	120	90	180	1110	1922	777	1554
SLPT16100	M10 x 100	15	16	95	83	17	50	18	140	105	210	1399	2797	979	1958
SLPT16120	M10 x 120	35	16	95	83	17	50	18	140	105	210	1399	2797	979	1958
SLPT16140	M10 x 140	55	16	95	83	17	50	18	140	105	210	1399	2797	979	1958
SLPT16160	M10 x 160	75	16	95	83	17	50	18	140	105	210	1399	2797	979	1958
SLPT18110	M12 x 110	10	18	110	97	19	80	20	170	130	255	1871	3743	1310	2620
SLPT18120	M12 x 120	20	18	110	97	19	80	20	170	130	255	1871	3743	1310	2620
SLPT18140	M12 x 140	40	18	110	97	19	80	20	170	130	255	1871	3743	1310	2620
SLPT18150	M12 x 150	50	18	110	97	19	80	20	170	130	255	1871	3743	1310	2620
SLPT18170	M12 x 170	70	18	110	97	19	80	20	170	130	255	1871	3743	1310	2620
SLPT18200	M12 x 200	100	18	110	97	19	80	20	170	130	255	1871	3743	1310	2620
SLPT24140	M16 x 140	20	24	130	117	24	160	26	200	150	300	1990	4776	1393	3343
SLPT24170	M16 x 170	50	24	130	117	24	160	26	200	150	300	1990	4776	1393	3343
SLPT24200	M16 x 200	80	24	130	117	24	160	26	200	150	300	1990	4776	1393	3343
SLPT24220	M16 x 220	100	24	130	117	24	160	26	200	150	300	1990	4776	1393	3343
SLPT28170	M20 x 170	20	28	160	146	30	240	31	250	190	375	2781	6674	1947	4672
SLPT28200	M20 x 200	50	28	160	146	30	240	31	250	190	375	2781	6674	1947	4672
SLPT28240	M20 x 240	90	28	160	146	30	240	31	250	190	375	2781	6674	1947	4672

SL-PC

Opt.1 ETA Assessed. Countersunk head

CODE	MXL	MAX. FIXTURE THICKNESS	DRILL Ø	HOLE DEPTH MIN.	MIN. ANCHOR DEPTH	INSTALLATION KEY	TORQUE (NM)	Ø ELEMENT TO FIX	MIN. SUBSTRATE THICKNESS	MIN. DISTANCE TO EDGE "A"	MIN. DISTANCE FROM AXIS "B"	TENSION LOAD NON-CRACKED CONCRETE	SHEAR LOAD NON-CRACKED CONCRETE	TENSION LOAD CRACKED CONCRETE	SHEAR LOAD CRACKED CONCRETE
SLPC10070	M6 x 70	10	10	70	59	4	15	12	100	75	150	782	844	591	591
SLPC10080	M6 x 80	20	10	70	59	4	15	12	100	75	150	782	844	591	591
SLPC10100	M6 x 100	40	10	70	59	4	15	12	100	75	150	782	844	591	591
SLPC12100	M8 x 100	25	12	85	72	5	30	14	120	90	180	1110	1922	777	1554
SLPC16100	M10 x 100	15	16	95	83	6	50	18	140	105	210	1399	2797	979	1958
SLPC16120	M10 x 120	35	16	95	83	6	50	18	140	105	210	1399	2797	979	1958
SLPC18120	M12 x 120	20	18	110	97	8	80	20	170	130	255	1871	3743	1310	2620

CH

Anti-spin sleeve anchor, for medium loads

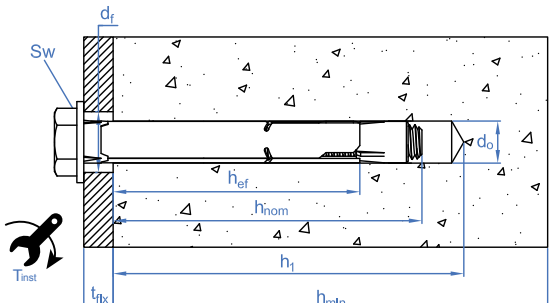

CH-TO

Hexagonal head screw 6.8. Opt.7 ETA Assessed

CODE	MXL	MAX. FIXTURE THICKNESS	DRILL Ø	HOLE DEPTH MIN.	MIN. ANCHOR DEPTH	INSTALLATION KEY	TORQUE (NM)	Ø ELEMENT TO FIX	MIN. SUBSTRATE THICKNESS	MIN. DISTANCE TO EDGE "A"	MIN. DISTANCE FROM AXIS "B"	TENSION LOAD NON-CRACKED CONCRETE	SHEAR LOAD NON-CRACKED CONCRETE
ACHT08C	M6 x 45	5	8	45	39	10	10	9	100	41	41	267	351
ACHT08L	M6 x 60	20	8	45	39	10	10	9	100	41	41	267	351
ACHT09C	M6 x 45	5	9	45	39	10	10	10	100	41	41	267	351
ACHT09L	M6 x 60	20	9	45	39	10	10	10	100	41	41	267	351
ACHT10C	M8 x 60	5	10	60	51	13	20	12	100	54	54	485	604
ACHT10L	M8 x 80	27	10	60	51	13	20	12	100	54	54	485	604
ACHT11C	M8 x 60	5	11	60	51	13	20	13	100	54	54	485	604
ACHT11L	M8 x 80	27	11	60	51	13	20	13	100	54	54	485	604
ACHT12C	M10 x 70	5	12	75	65	17	35	14	100	65	65	662	794
ACHT12L	M10 x 100	32	12	75	65	17	35	14	100	65	65	662	794
ACHT14C	M10 x 70	5	14	75	65	17	35	16	100	65	65	662	794
ACHT14L	M10 x 100	32	14	75	65	17	35	16	100	65	65	662	794
ACHT16C	M12 x 80	5	16	80	70	19	50	18	110	74	74	812	974
ACHT16L	M12 x 110	37	16	80	70	19	50	18	110	74	74	812	974
ACHT20C	M16 x 110	15	20	105	92	24	140	22	145	97	97	1459	2744
ACHT25C	M20 x 130	25	25	130	102	30	240	27	160	120	240	1424	3417

CH-A2

A2 Stainless steel. Opt.7 ETA Assessed

CODE	MXL	MAX. FIXTURE THICKNESS	DRILL Ø	HOLE DEPTH MIN.	MIN. ANCHOR DEPTH	INSTALLATION KEY	TORQUE (NM)	Ø ELEMENT TO FIX	MIN. SUBSTRATE THICKNESS	MIN. DISTANCE TO EDGE "A"	MIN. DISTANCE FROM AXIS "B"	TENSION LOAD NON-CRACKED CONCRETE	SHEAR LOAD NON-CRACKED CONCRETE
ACHTA208C	M6 x 45	5	8	45	39	10	10	9	100	41	41	392	329
ACHTA208L	M6 x 60	20	8	45	39	10	10	9	100	41	41	392	329
ACHTA209C	M6 x 45	5	9	45	39	10	10	10	100	41	41	392	329
ACHTA209L	M6 x 60	20	9	45	39	10	10	10	100	41	41	392	329
ACHTA210C	M8 x 60	5	10	60	51	13	20	12	100	54	54	384	600
ACHTA210L	M8 x 80	27	10	60	51	13	20	12	100	54	54	384	600
ACHTA211C	M8 x 60	5	11	60	51	13	20	13	100	54	54	384	600
ACHTA211L	M8 x 80	27	11	60	51	13	20	13	100	54	54	384	600
ACHTA212C	M10 x 70	5	12	75	65	17	35	14	100	65	65	566	794
ACHTA212L	M10 x 100	32	12	75	65	17	35	14	100	65	65	566	794
ACHTA214C	M10 x 70	5	14	75	65	17	35	16	100	65	65	566	794
ACHTA214L	M10 x 100	32	14	75	65	17	35	16	100	65	65	566	794
ACHTA216C	M12 x 80	5	16	80	70	19	50	18	110	74	74	647	974
ACHTA216L	M12 x 110	37	16	80	70	19	50	18	110	74	74	647	974
ACHTA220C	M16 x 110	15	20	105	92	24	140	22	145	97	97	971	2572

CH-8.8

Hexagonal head screw 8.8. Opt.7 ETA Assessed

CODE	MXL	MAX. FIXTURE THICKNESS	DRILL Ø	HOLE DEPTH MIN.	MIN. ANCHOR DEPTH	INSTALLATION KEY	TORQUE (NM)	Ø ELEMENT TO FIX	MIN. SUBSTRATE THICKNESS	MIN. DISTANCE TO EDGE "A"	MIN. DISTANCE FROM AXIS "B"	TENSION LOAD NON-CRACKED CONCRETE	SHEAR LOAD NON-CRACKED CONCRETE
ACHT8808C	M6 x 45	5	8	45	39	10	10	9	100	41	41	267	392
ACHT8808L	M6 x 60	20	8	45	39	10	10	9	100	41	41	267	392
ACHT8810C	M8 x 60	5	10	60	51	13	20	12	100	54	54	485	604
ACHT8810L	M8 x 80	27	10	6	51	13	20	12	100	54	54	485	604
ACHT8812C	M10 x 70	5	12	75	65	17	35	14	100	65	65	662	794
ACHT8812L	M10 x 100	32	12	75	65	17	35	14	100	65	65	662	794
ACHT8816C	M12 x 80	5	16	80	70	19	50	18	110	74	74	812	974
ACHT8816L	M12 x 110	37	16	80	70	19	50	18	110	74	74	812	974
ACHT8820C	M16 x 110	15	20	105	92	24	140	22	145	97	97	1459	2918

CH-8.8 E

Hexagonal head screw 8.8 for reduced thicknesses

CODE	MXL	MAX. FIXTURE THICKNESS	DRILL Ø	HOLE DEPTH MIN.	MIN. ANCHOR DEPTH	INSTALLATION KEY	TORQUE (NM)	Ø ELEMENT TO FIX	MIN. SUBSTRATE THICKNESS	MIN. DISTANCE TO EDGE "A"	MIN. DISTANCE FROM AXIS "B"	TENSION LOAD NON-CRACKED CONCRETE	SHEAR LOAD NON-CRACKED CONCRETE
ACHT8808E	M6 x 40	5	8	40	32	10	10	9	70	41	54	215	298
ACHT8810E	M8 x 40	5	10	45	37	13	20	12	70	41	54	249	298

CH-PL

Flat head screw. Opt.7 ETA Assessed. Homologado ETE Opción 7.

CODE	MXL	MAX. FIXTURE THICKNESS	DRILL Ø	HOLE DEPTH MIN.	MIN. ANCHOR DEPTH	INSTALLATION KEY	TORQUE (NM)	Ø ELEMENT TO FIX	MIN. SUBSTRATE THICKNESS	MIN. DISTANCE TO EDGE "A"	MIN. DISTANCE FROM AXIS "B"	TENSION LOAD NON-CRACKED CONCRETE	SHEAR LOAD NON-CRACKED CONCRETE
ACHTPL08C	M6 x 45	5	8	45	39	4	10	9	100	41	41	267	392
ACHTPL08L	M6 x 60	20	8	45	39	4	10	9	100	41	41	267	392
ACHTPL10C	M8 x 60	5	10	60	51	5	20	12	100	54	54	485	604
ACHTPL10L	M8 x 80	27	10	60	51	5	20	12	100	54	54	485	604
ACHTPL12C	M10 x 70	5	12	75	65	6	35	14	100	65	65	662	794
ACHTPL12L	M10 x 100	32	12	75	65	6	35	14	100	65	65	662	794

CH-INB

Zinc-plated tamperproof head. Opt.7 ETA Assessed

CODE	MXL	MAX. FIXTURE THICKNESS	DRILL Ø	HOLE DEPTH MIN.	MIN. ANCHOR DEPTH	INSTALLATION KEY	TORQUE (NM)	Ø ELEMENT TO FIX	MIN. SUBSTRATE THICKNESS	MIN. DISTANCE TO EDGE "A"	MIN. DISTANCE FROM AXIS "B"	TENSION LOAD NON-CRACKED CONCRETE	SHEAR LOAD NON-CRACKED CONCRETE
ACHINB08C	M6 x 45	5	8	45	39	TX40	10	9	100	41	41	267	219
ACHINB08L	M6 x 60	20	8	45	39	TX40	10	9	100	41	41	267	219
ACHINB10C	M8 x 60	5	10	60	51	TX40	20	12	100	54	54	485	399
ACHINB10L	M8 x 80	27	10	60	51	TX40	20	12	100	54	54	485	399

CH-INN

Black zinc-plated tamperproof head. Opt.7 ETA Assessed

CODE	MXL	MAX. FIXTURE THICKNESS	DRILL Ø	HOLE DEPTH MIN.	MIN. ANCHOR DEPTH	INSTALLATION KEY	TORQUE (NM)	Ø ELEMENT TO FIX	MIN. SUBSTRATE THICKNESS	MIN. DISTANCE TO EDGE "A"	MIN. DISTANCE FROM AXIS "B"	TENSION LOAD NON-CRACKED CONCRETE	SHEAR LOAD NON-CRACKED CONCRETE
ACHINN08C	M6 x 45	5	8	45	39	TX40	10	9	100	41	41	267	219
ACHINN08L	M6 x 60	20	8	45	39	TX40	10	9	100	41	41	267	219
ACHINN10C	M8 x 60	5	10	60	51	TX40	20	12	100	54	54	485	399
ACHINN10L	M8 x 80	27	10	60	51	TX40	20	12	100	54	54	485	399

CH-PI

A2 Stainless steel flat head screw. Opt.7 ETA Assessed

CODE	MXL	MAX. FIXTURE THICKNESS	DRILL Ø	HOLE DEPTH MIN.	MIN. ANCHOR DEPTH	INSTALLATION KEY	TORQUE (NM)	Ø ELEMENT TO FIX	MIN. SUBSTRATE THICKNESS	MIN. DISTANCE TO EDGE "A"	MIN. DISTANCE FROM AXIS "B"	TENSION LOAD NON-CRACKED CONCRETE	SHEAR LOAD NON-CRACKED CONCRETE
ACHTPI08C	M6 x 45	5	8	45	39	4	10	9	100	41	41	392	329
ACHTPI08L	M6 x 60	20	8	45	39	4	10	9	100	41	41	392	329
ACHTPI10C	M8 x 60	5	10	60	51	5	20	12	100	54	54	384	600
ACHTPI10L	M8 x 80	27	10	60	51	5	20	12	100	54	54	384	600
ACHTPI12C	M10 x 70	5	12	75	65	6	35	14	100	65	65	566	794
ACHTPI12L	M10 x 100	32	12	75	65	6	35	14	100	65	65	566	794

CH-ES

Projecting bolt

CODE	MXL	MAX. FIXTURE THICKNESS	DRILL Ø	HOLE DEPTH MIN.	MIN. ANCHOR DEPTH	INSTALLATION KEY	TORQUE (NM)	Ø ELEMENT TO FIX	MIN. SUBSTRATE THICKNESS	MIN. DISTANCE TO EDGE "A"	MIN. DISTANCE FROM AXIS "B"	TENSION LOAD NON-CRACKED CONCRETE	SHEAR LOAD NON-CRACKED CONCRETE
ACHE08C	M6 x 45	5	8	45	39	10	10	9	100	41	41	267	211
ACHE09C	M6 x 45	5	9	45	39	10	10	10	100	41	41	267	211
ACHE10C	M8 x 60	5	10	60	51	13	20	12	100	54	54	485	384
ACHE10L	M8 x 80	27	10	60	51	13	20	12	105	54	54	485	384
ACHE11C	M8 x 60	5	11	60	51	13	20	13	100	54	54	485	384
ACHE11L	M8 x 80	27	11	60	51	13	20	13	105	54	54	485	384
ACHE12C	M10 x 70	5	12	75	65	17	35	14	100	65	65	662	608
ACHE12L	M10 x 100	32	12	75	65	17	35	14	110	65	65	662	608
ACHE14C	M10 x 70	5	14	75	65	17	35	16	100	65	65	662	608
ACHE14L	M10 x 100	32	14	75	65	17	35	16	100	65	65	662	608

CH-GA

Hook bolt

CODE	MXL	APERTURE HOOK	DRILL Ø	HOLE DEPTH MIN.	MIN. ANCHOR DEPTH	INSTALLATION KEY	TORQUE (NM)	Ø ELEMENT TO FIX	MIN. SUBSTRATE THICKNESS	MIN. DISTANCE TO EDGE "A"	MIN. DISTANCE FROM AXIS "B"	TENSION LOAD NON-CRACKED CONCRETE	SHEAR LOAD NON-CRACKED CONCRETE
ACHG08C	M6 x 45	10	8	45	39	10	10	9	100	41	41	73	-
ACHG09C	M6 x 45	10	9	45	39	10	10	10	100	41	41	73	-
ACHG10C	M8 x 60	13	10	60	51	13	20	12	100	54	54	146	-
ACHG11C	M8 x 60	13	11	60	51	13	20	13	100	54	54	146	-
ACHG12C	M10 x 70	14	12	75	65	17	35	14	100	65	65	243	-
ACHG14C	M10 x 70	14	14	75	65	17	35	16	100	65	65	243	-
ACHG16C	M12 x 80	22	16	80	70	19	50	18	110	74	74	291	-

CH-GE Hook spiral

CODE	MXL	MAX. FIXTURE THICKNESS	DRILL Ø	HOLE DEPTH MIN.	MIN. ANCHOR DEPTH	INSTALLATION KEY	TORQUE (NM)	Ø ELEMENT TO FIX	MIN. SUBSTRATE THICKNESS	MIN. DISTANCE TO EDGE "A"	MIN. DISTANCE FROM AXIS "B"	TENSION LOAD NON-CRACKED CONCRETE	SHEAR LOAD NON-CRACKED CONCRETE
ACHGE10	M8 x 115	-	10	60	51	13	20	12	100	41	41	146	-
ACHGE12	M10 x 135	-	12	80	70	17	35	14	100	54	54	243	-

CH-GF Forged hook bolt

CODE	MXL	APERTURE HOOK	DRILL Ø	HOLE DEPTH MIN.	MIN. ANCHOR DEPTH	INSTALLATION KEY	TORQUE (NM)	Ø ELEMENT TO FIX	MIN. SUBSTRATE THICKNESS	MIN. DISTANCE TO EDGE "A"	MIN. DISTANCE FROM AXIS "B"	TENSION LOAD NON-CRACKED CONCRETE	SHEAR LOAD NON-CRACKED CONCRETE
ACHGFO08C	M6 x 45	10	8	45	39	10	10	9	100	41	41	80	-
ACHGFO10C	M8 x 60	11	10	60	51	13	20	12	100	54	54	155	-
ACHGFO12C	M10 x 70	14	12	75	65	17	35	14	100	65	65	243	-

CH-GF A2 A2 Stainless steel forged hook bolt

CODE	MXL	APERTURE HOOK	DRILL Ø	HOLE DEPTH MIN.	MIN. ANCHOR DEPTH	INSTALLATION KEY	TORQUE (NM)	Ø ELEMENT TO FIX	MIN. SUBSTRATE THICKNESS	MIN. DISTANCE TO EDGE "A"	MIN. DISTANCE FROM AXIS "B"	TENSION LOAD NON-CRACKED CONCRETE	SHEAR LOAD NON-CRACKED CONCRETE
ACHGA208C	M6 x 45	10	8	45	39	10	10	9	100	41	41	84	-
ACHGA210C	M8 x 60	11	10	60	51	13	20	12	100	54	54	84	-
ACHGA212C	M10 x 70	14	12	75	65	17	35	14	100	65	65	155	-

CH-AR Eye bolt

CODE	MXL	EYE BOLT Ø	DRILL Ø	HOLE DEPTH MIN.	MIN. ANCHOR DEPTH	INSTALLATION KEY	TORQUE (NM)	Ø ELEMENT TO FIX	MIN. SUBSTRATE THICKNESS	MIN. DISTANCE TO EDGE "A"	MIN. DISTANCE FROM AXIS "B"	TENSION LOAD NON-CRACKED CONCRETE	SHEAR LOAD NON-CRACKED CONCRETE
ACHA08C	M6 x 45	10	8	45	39	10	10	9	100	41	41	73	-
ACHA09C	M6 x 45	10	9	45	39	10	10	10	100	41	41	73	-
ACHA10C	M8 x 60	13	10	60	51	13	20	12	100	54	54	146	-
ACHA11C	M8 x 60	13	11	60	51	13	20	13	100	54	54	146	-
ACHA12C	M10 x 70	14	12	75	65	17	35	14	100	65	65	243	-
ACHA14C	M10 x 70	14	14	75	65	17	35	16	100	65	65	243	-
ACHA16C	M12 x 80	22	16	80	70	19	50	18	110	74	74	291	-

CH-AF Forged eye bolt

CODE	MXL	EYE BOLT Ø	DRILL Ø	HOLE DEPTH MIN.	MIN. ANCHOR DEPTH	INSTALLATION KEY	TORQUE (NM)	Ø ELEMENT TO FIX	MIN. SUBSTRATE THICKNESS	MIN. DISTANCE TO EDGE "A"	MIN. DISTANCE FROM AXIS "B"	TENSION LOAD NON-CRACKED CONCRETE	SHEAR LOAD NON-CRACKED CONCRETE
ACHAFO08C	M6 x 45	10	8	45	39	10	10	9	100	41	41	204	-
ACHAFO10C	M8 x 60	12	10	60	51	13	20	12	100	54	54	485	-
ACHAFO12C	M10 x 70	14	12	75	65	17	35	14	100	65	65	662	-

CH-AF A2 A2 Stainless steel forged eye bolt

CODE	MXL	EYE BOLT Ø	DRILL Ø	HOLE DEPTH MIN.	MIN. ANCHOR DEPTH	INSTALLATION KEY	TORQUE (NM)	Ø ELEMENT TO FIX	MIN. SUBSTRATE THICKNESS	MIN. DISTANCE TO EDGE "A"	MIN. DISTANCE FROM AXIS "B"	TENSION LOAD NON-CRACKED CONCRETE	SHEAR LOAD NON-CRACKED CONCRETE
ACHAA208C	M6 x 45	10	8	45	39	10	10	9	100	41	41	164	-
ACHAA210C	M8 x 60	11	10	60	51	13	20	12	100	54	54	384	-
ACHAA212C	M10 x 70	14	12	75	65	17	35	14	100	65	65	566	-

HE Drop-in anchor with internal thread for heavy loads

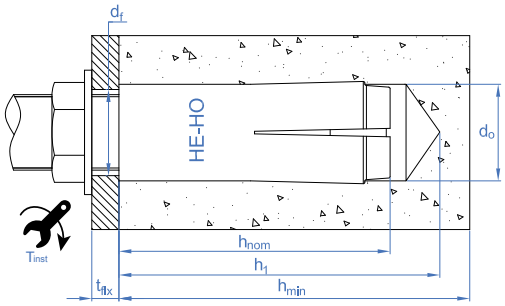

HE-HO Zinc-plated. Opt.7 ETA Assessed & for non-structural applications

CODE	MXL	DRILL Ø	HOLE DEPTH MIN.	MIN. ANCHOR DEPTH	TORQUE (NM)	Ø ELEMENT TO FIX	MIN. SUBSTRATE THICKNESS	MIN. DISTANCE TO EDGE "A"	MIN. DISTANCE FROM AXIS "B"	TENSION LOAD NON-CRACKED CONCRETE	SHEAR LOAD NON-CRACKED CONCRETE
HEHOM06	M6	8	27	25	4	7	100	105	60	249	298
HEHOM08	M8	10	33	30	11	9	100	105	60	327	392
HEHOM10	M10	12	43	40	17	12	100	140	80	432	530
HEHOM12	M12	15	54	50	38	14	100	175	100	603	844
HEHOM16	M16	20	70	65	60	18	130	230	130	894	1893
HEHOM20	M20	25	86	80	100	22	160	280	160	1220	2767
HEHOM12D	M12	16	54	50	38	14	100	175	100	603	844

HE-A4

A4 Stainless steel. ETA Assessed for non-structural applications

CODE	MXL	DRILL Ø	HOLE DEPTH MIN.	MIN. ANCHOR DEPTH	TORQUE (NM)	Ø ELEMENT TO FIX	MIN. SUBSTRATE THICKNESS	MIN. DISTANCE TO EDGE "A"	MIN. DISTANCE FROM AXIS "B"	TENSION LOAD NON-CRACKED CONCRETE	SHEAR LOAD NON-CRACKED CONCRETE
HEA4M06	M6	8	27	25	4	7	80	150	200	87	87
HEA4M08	M8	10	33	30	11	9	80	150	200	121	121
HEA4M10	M10	12	43	40	17	12	80	150	200	121	121
HEA4M12	M12	15	54	50	38	14	100	150	200	225	225
HEA4M16	M16	20	70	65	60	18	130	195	260	433	433
HEA4M20	M20	25	86	80	100	22	160	240	320	572	572

HE-CL

With collar. Zinc-plated. Opt.7 ETA Assessed & for non-structural applications

CODE	MXL	DRILL Ø	HOLE DEPTH MIN.	MIN. ANCHOR DEPTH	TORQUE (NM)	Ø ELEMENT TO FIX	MIN. SUBSTRATE THICKNESS	MIN. DISTANCE TO EDGE "A"	MIN. DISTANCE FROM AXIS "B"	TENSION LOAD NON-CRACKED CONCRETE	SHEAR LOAD NON-CRACKED CONCRETE
HECLOM06	M6	8	27	25	4	7	100	105	60	249	298
HECLOM08	M8	10	33	30	11	9	100	105	90	327	392
HECLOM10	M10	12	43	40	17	12	100	140	80	432	530
HECLOM12	M12	15	54	50	38	14	100	175	100	603	844
HECLOM16	M16	20	70	65	60	18	130	230	130	894	1893
HECLOM12D	M12	16	54	50	38	14	100	175	160	603	844

HE-C4

With collar. A4 Stainless steel. ETA Assessed for non-structural applications

CODE	MXL	DRILL Ø	HOLE DEPTH MIN.	MIN. ANCHOR DEPTH	TORQUE (NM)	Ø ELEMENT TO FIX	MIN. SUBSTRATE THICKNESS	MIN. DISTANCE TO EDGE "A"	MIN. DISTANCE FROM AXIS "B"	TENSION LOAD NON-CRACKED CONCRETE	SHEAR LOAD NON-CRACKED CONCRETE
HEC4M06	M6	8	27	25	4	7	80	150	200	87	87
HEC4M08	M8	10	33	30	11	9	80	150	200	121	121
HEC4M10	M10	12	43	40	17	12	80	150	200	121	121
HEC4M12	M12	15	54	50	38	14	100	150	200	225	225

HE-HC

Short. Zinc-plated. ETA Assessed for non-structural applications

CODE	MXL	DRILL Ø	HOLE DEPTH MIN.	MIN. ANCHOR DEPTH	TORQUE (NM)	Ø ELEMENT TO FIX	MIN. SUBSTRATE THICKNESS	MIN. DISTANCE TO EDGE "A"	MIN. DISTANCE FROM AXIS "B"	TENSION LOAD NON-CRACKED CONCRETE	SHEAR LOAD NON-CRACKED CONCRETE
HEHCM08	M8 x 25	10	28	25	11	9	80	60	75	101	101
HEHCM10	M10 x 25	12	28	25	17	12	80	60	75	162	162
HEHCM12	M12 x 25	15	29	25	38	14	80	60	75	162	162

HE-NO

Zinc-plated

CODE	MXL	DRILL Ø	HOLE DEPTH MIN.	MIN. ANCHOR DEPTH	TORQUE (NM)	Ø ELEMENT TO FIX	MIN. SUBSTRATE THICKNESS	MIN. DISTANCE TO EDGE "A"	MIN. DISTANCE FROM AXIS "B"	TENSION LOAD NON-CRACKED CONCRETE	SHEAR LOAD NON-CRACKED CONCRETE
HENOM06	M6	8	27	25	4	7	100	105	60	175	298
HENOM08	M8	10	33	30	11	9	100	105	90	230	392
HENOM10	M10	12	43	40	17	12	100	140	80	354	530
HENOM12	M12	15	54	50	38	14	100	175	100	494	844
HENOM16	M16	20	70	65	60	18	130	230	130	733	1893
HENOM20	M20	25	86	80	100	22	160	280	160	1000	2767

HE-NS

A4 Stainless steel. ETA Assessed for non-structural applications

CODE	MXL	DRILL Ø	HOLE DEPTH MIN.	MIN. ANCHOR DEPTH	TORQUE (NM)	Ø ELEMENT TO FIX	MIN. SUBSTRATE THICKNESS	MIN. DISTANCE TO EDGE "A"	MIN. DISTANCE FROM AXIS "B"	TENSION LOAD NON-CRACKED CONCRETE	SHEAR LOAD NON-CRACKED CONCRETE
HENSM08	M8 x 30	10	33	30	11	9	100	105	90	327	392
HENSM10	M10 x 40	12	43	40	17	12	100	140	80	432	530
HENSM12	M12 x 50	15	54	50	38	14	100	175	100	603	844
HENSM16	M16 x 65	20	70	65	60	18	130	230	130	894	1893

HC

Hollow-core slab anchor. ETA Assessed

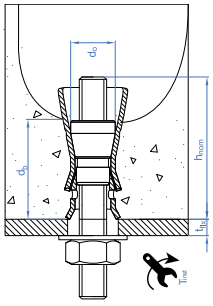

HC

Shield

CODE	MXL	DRILL Ø	HOLE DEPTH MIN.	TORQUE (NM)	Ø ELEMENT TO FIX	MIN. SUBSTRATE THICKNESS	MIN. DISTANCE TO EDGE "A"	MIN. DISTANCE FROM AXIS "B"	TENSION LOAD NON-CRACKED CONCRETE	SHEAR LOAD NON-CRACKED CONCRETE
HCM06	M6 x 38	10	45	10	7	25	100	60		-
HCM08	M8 x 44	12	50	20	9	25	100	70		-
HCM10	M10 x 53	16	60	30	12	25	100	80		-

TALA

Brass expansion anchor for light fastenings in solid materials

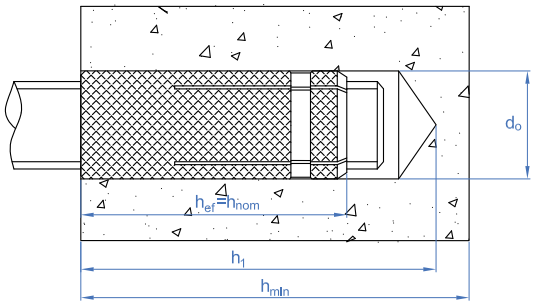

TALA

Brass expansion anchor for light fixings in solid materials

CODE	MXL	DRILL Ø	HOLE DEPTH MIN.	MIN. SUBSTRATE THICKNESS	MIN. DISTANCE TO EDGE "A"	MIN. DISTANCE FROM AXIS "B"	TENSION LOAD NON-CRACKED CONCRETE
TALA532	W5/32	5	20	25	24	48	60
TALAM04	M4	5	20	25	24	48	60
TALAM05	M5	6	22	30	27	54	70
TALAM06	M6	8	28	35	35	69	100
TALAM08	M8	10	33	40	42	84	150
TALAM10	M10	12	40	45	51	102	210
TALAM12	M12	15	45	50	57	114	320

TA-ME

Steel expansion plug

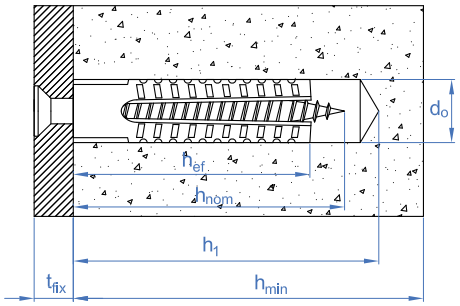

TA-ME

Steel expansion plug

CODE	MXL	DRILL Ø	HOLE DEPTH MIN.	MIN. SUBSTRATE THICKNESS	MIN. DISTANCE TO EDGE "A"	MIN. DISTANCE FROM AXIS "B"	TENSION LOAD NON-CRACKED CONCRETE
TAME05030	M5	5	40	60	120	60	20
TAME06032	M6	6	40	60	120	60	22
TAME08038	M8	8	50	70	140	70	40
TAME08060	M8	8	70	120	240	120	47
TAME10060	M10	10	70	120	240	120	52

AN-CU

Ceiling wedge anchor ETA Assessed

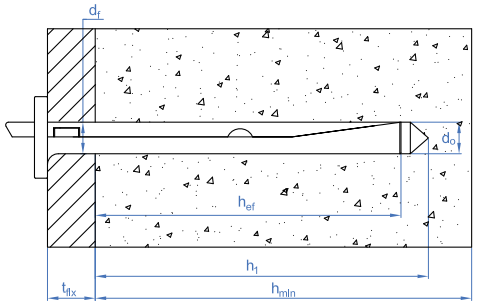

AN-CU

Wedge-type, hammer-drive metal anchor

CODE	MXL	MAX. FIXTURE THICKNESS	DRILL Ø	HOLE DEPTH MIN.	Ø ELEMENT TO FIX	MIN. SUBSTRATE THICKNESS	MIN. DISTANCE TO EDGE "A"	MIN. DISTANCE FROM AXIS "B"	TENSION LOAD NON-CRACKED CONCRETE
ANCU06040	6 x 40	5	6	40	7	80	150	200	120
ANCU06070	6 x 70	35	6	40	7	80	150	200	120

ZA

Anchor for medium-heavy loads in hollow and solid elements

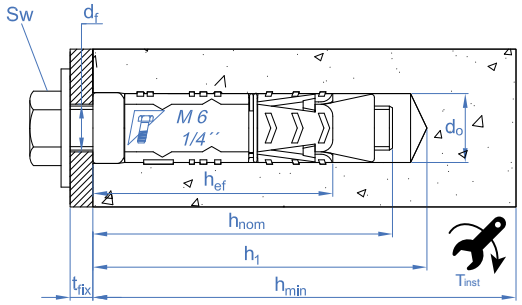

ZA-CA

Shield

CODE	MXL	MAX. FIXTURE THICKNESS	DRILL Ø	HOLE DEPTH MIN.	MIN. ANCHOR DEPTH	TORQUE (NM)	Ø ELEMENT TO FIX	MIN. SUBSTRATE THICKNESS	MIN. DISTANCE TO EDGE "A"	MIN. DISTANCE FROM AXIS "B"	TENSION LOAD NON-CRACKED CONCRETE	SHEAR LOAD NON-CRACKED CONCRETE
AZAMC06	M6 x 48	-	12	60	48	7	7	100	62	125	513	351
AZAMC08	M8 x 50	-	14	65	50	15	9	100	65	130	561	640
AZAMC10	M10 x 58	-	16	75	58	30	12	102	80	155	725	870
AZAMC12	M12 x 72	-	20	90	72	50	14	122	95	185	865	1473
AZAMC16	M16 x 107	-	25	125	107	120	18	192	145	290	1053	2744

ZA-TO

Loose bolt

CODE	MXL	MAX. FIXTURE THICKNESS	DRILL Ø	HOLE DEPTH MIN.	MIN. ANCHOR DEPTH	INSTALLATION KEY	TORQUE (NM)	Ø ELEMENT TO FIX	MIN. SUBSTRATE THICKNESS	MIN. DISTANCE TO EDGE "A"	MIN. DISTANCE FROM AXIS "B"	TENSION LOAD NON-CRACKED CONCRETE	SHEAR LOAD NON-CRACKED CONCRETE
AZAMT06	M6 x 50	1	12	60	48	10	7	7	100	62	125	513	351
AZAMT08	M8 x 60	10	14	65	50	13	15	9	100	65	130	561	640
AZAMT10	M10 x 80	20	16	75	58	17	30	12	102	80	155	725	870
AZAMT12	M12 x 100	25	20	90	72	19	50	14	122	95	185	865	1473
AZAMT16	M16 x 140	30	25	125	107	24	120	18	192	145	290	1053	2744

ZA-TL

Long loose bolt

CODE	MXL	MAX. FIXTURE THICKNESS	DRILL Ø	HOLE DEPTH MIN.	MIN. ANCHOR DEPTH	INSTALLATION KEY	TORQUE (NM)	Ø ELEMENT TO FIX	MIN. SUBSTRATE THICKNESS	MIN. DISTANCE TO EDGE "A"	MIN. DISTANCE FROM AXIS "B"	TENSION LOAD NON-CRACKED CONCRETE	SHEAR LOAD NON-CRACKED CONCRETE
ZT06L10	M6 x 60	10	12	60	48	10	7	7	100	62	125	513	351
ZT06L30	M6 x 80	30	12	60	48	10	7	7	100	62	125	513	351
ZT08L15	M8 x 70	15	14	65	50	13	15	9	100	65	130	561	640
ZT08L35	M8 x 90	35	14	65	50	13	15	9	100	65	130	561	640
ZT08L45	M8 x 100	45	14	65	50	13	15	9	100	65	130	561	640
ZT10L10	M10 x 70	10	16	75	58	17	30	12	102	80	155	725	870
ZT10L30	M10 x 90	30	16	75	58	17	30	12	102	80	155	725	870
ZT10L50	M10 x 110	50	16	75	58	17	30	12	102	80	155	725	870
ZT10L80	M10 x 140	80	16	75	58	17	30	12	102	80	155	725	870
ZT12L15	M12 x 90	15	20	90	72	19	50	14	122	95	185	865	1473
ZT12L45	M12 x 120	45	20	90	72	19	50	14	122	95	185	865	1473
ZT12L65	M12 x 140	65	20	90	72	19	50	14	122	95	185	865	1473

ZA-PR

Long loose bolt with pipe

CODE	MXL	MAX. FIXTURE THICKNESS	DRILL Ø	HOLE DEPTH MIN.	MIN. ANCHOR DEPTH	INSTALLATION KEY	TORQUE (NM)	Ø ELEMENT TO FIX	MIN. SUBSTRATE THICKNESS	MIN. DISTANCE TO EDGE "A"	MIN. DISTANCE FROM AXIS "B"	TENSION LOAD NON-CRACKED CONCRETE	SHEAR LOAD NON-CRACKED CONCRETE
ZP06C40	M6 x 90	40	12	60	48	10	7	14	100	62	125	415	246
ZP08C15	M8 x 70	15	14	65	50	13	7	16	100	65	130	561	448
ZP08C45	M8 x 100	45	14	65	50	13	30	16	100	80	130	561	448
ZP10C50	M10 x 110	50	16	75	58	17	30	18	102	80	155	725	709
ZP10C80	M10 x 140	80	16	75	58	17	30	18	102	80	155	725	709
ZP12C15	M12 x 90	15	20	90	72	19	50	22	122	95	185	865	1031
ZP12C65	M12 x 140	65	20	90	72	19	50	22	122	95	185	865	1031

ZA-ES

Projecting bolt

CODE	MXL	MAX. FIXTURE THICKNESS	DRILL Ø	HOLE DEPTH MIN.	MIN. ANCHOR DEPTH	INSTALLATION KEY	TORQUE (NM)	Ø ELEMENT TO FIX	MIN. SUBSTRATE THICKNESS	MIN. DISTANCE TO EDGE "A"	MIN. DISTANCE FROM AXIS "B"	TENSION LOAD NON-CRACKED CONCRETE	SHEAR LOAD NON-CRACKED CONCRETE
AZAME06	M6 x 60	1	12	60	48	10	7	7	100	62	125	415	246
AZAME08	M8 x 70	10	14	65	50	13	15	9	100	65	130	561	448
AZAME10	M10 x 100	30	16	75	58	17	30	12	102	80	155	725	709
AZAME12	M12 x 120	30	20	90	72	19	50	14	122	95	185	865	1031
AZAME16	M16 x 140	12	25	125	107	24	120	18	192	145	290	1053	1920

ZA-GA Hook bolt

CODE	MXL	APERTURE HOOK	DRILL Ø	HOLE DEPTH MIN.	MIN. ANCHOR DEPTH	INSTALLATION KEY	TORQUE (NM)	Ø ELEMENT TO FIX	MIN. SUBSTRATE THICKNESS	MIN. DISTANCE TO EDGE "A"	MIN. DISTANCE FROM AXIS "B"	TENSION LOAD NON-CRACKED CONCRETE	SHEAR LOAD NON-CRACKED CONCRETE
AZAMG06	M6 x 48	10	12	60	48	10	7	7	100	62	125	73	-
AZAMG08	M8 x 50	13	14	65	50	13	15	9	100	65	130	146	-
AZAMG10	M10 x 58	14	16	75	58	17	30	12	102	80	155	243	-
AZAMG12	M12 x 72	22	20	90	72	19	50	14	122	95	185	291	-

ZA-GF Forged hook bolt

CODE	MXL	APERTURE HOOK	DRILL Ø	HOLE DEPTH MIN.	MIN. ANCHOR DEPTH	INSTALLATION KEY	TORQUE (NM)	Ø ELEMENT TO FIX	MIN. SUBSTRATE THICKNESS	MIN. DISTANCE TO EDGE "A"	MIN. DISTANCE FROM AXIS "B"	TENSION LOAD NON-CRACKED CONCRETE	SHEAR LOAD NON-CRACKED CONCRETE
AZAMGF006	M6 x 60	10	12	60	48	10	7	7	100	62	125	80	-
AZAMGF008	M8 x 70	11	14	65	50	13	15	9	100	65	130	155	-
AZAMGF010	M10 x 100	14	16	75	58	17	30	12	102	80	155	243	-
AZAMGF012	M12 x 120	18	20	90	72	19	50	14	122	95	185	396	-

ZA-AR Eye bolt

CODE	MXL	EYE BOLT Ø	DRILL Ø	HOLE DEPTH MIN.	MIN. ANCHOR DEPTH	INSTALLATION KEY	TORQUE (NM)	Ø ELEMENT TO FIX	MIN. SUBSTRATE THICKNESS	MIN. DISTANCE TO EDGE "A"	MIN. DISTANCE FROM AXIS "B"	TENSION LOAD NON-CRACKED CONCRETE	SHEAR LOAD NON-CRACKED CONCRETE
AZAMA06	M6 x 48	10	12	60	48	10	7	7	100	62	125	73	-
AZAMA08	M8 x 50	13	14	65	50	13	15	9	100	65	130	146	-
AZAMA10	M10 x 58	14	16	75	58	17	30	12	102	80	155	243	-
AZAMA12	M12 x 72	22	20	90	72	19	50	14	122	95	185	291	-

ZA-AF Forged eye bolt

CODE	MXL	EYE BOLT Ø	DRILL Ø	HOLE DEPTH MIN.	MIN. ANCHOR DEPTH	INSTALLATION KEY	TORQUE (NM)	Ø ELEMENT TO FIX	MIN. SUBSTRATE THICKNESS	MIN. DISTANCE TO EDGE "A"	MIN. DISTANCE FROM AXIS "B"	TENSION LOAD NON-CRACKED CONCRETE	SHEAR LOAD NON-CRACKED CONCRETE
AZAMAF006	M6 x 48	10	12	60	48	10	7	7	100	62	125	204	-
AZAMAF008	M8 x 50	12	14	65	50	13	15	9	100	65	130	555	-
AZAMAF010	M10 x 58	14	16	75	58	17	30	12	102	80	155	725	-
AZAMAF012	M12 x 72	17	20	90	72	19	50	14	122	95	185	820	-

AC Winged steel anchor for heavy-duty fixings

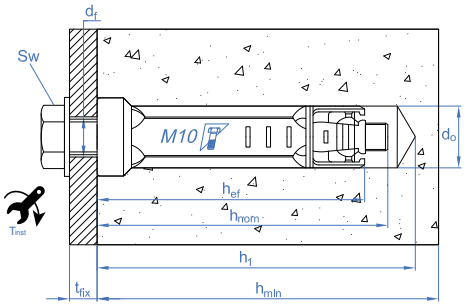

AC-CA Shield

CODE	MXL	MAX. FIXTURE THICKNESS	DRILL Ø	HOLE DEPTH MIN.	MIN. ANCHOR DEPTH	TORQUE (NM)	Ø ELEMENT TO FIX	MIN. SUBSTRATE THICKNESS	MIN. DISTANCE TO EDGE "A"	MIN. DISTANCE FROM AXIS "B"	TENSION LOAD NON-CRACKED CONCRETE	SHEAR LOAD NON-CRACKED CONCRETE
AACCA06	M6 Tornillo 6.8	-	10	45	40	10	7	100	60	120	92	351
AACCA08	M8 Tornillo 6.8	-	14	60	50	25	9	100	75	150	98	640
AACCA10	M10 Tornillo 6.8	-	16	70	60	50	12	120	90	180	441	1014
AACCA12	M12 Tornillo 6.8	-	20	90	80	85	14	160	120	240	571	1473
AACCA16	M16 Tornillo 6.8	-	25	110	100	120	18	200	150	300	698	2744

AC-CI A4 Stainless steel shield

CODE	MXL	MAX. FIXTURE THICKNESS	DRILL Ø	HOLE DEPTH MIN.	MIN. ANCHOR DEPTH	TORQUE (NM)	Ø ELEMENT TO FIX	MIN. SUBSTRATE THICKNESS	MIN. DISTANCE TO EDGE "A"	MIN. DISTANCE FROM AXIS "B"	TENSION LOAD NON-CRACKED CONCRETE	SHEAR LOAD NON-CRACKED CONCRETE
AACCI06	M6 x 40	-	10	45	40	10	7	100	60	120	92	329
AACCI08	M8 x 50	-	14	60	50	25	9	100	75	150	98	600
AACCI10	M10 x 60	-	16	70	60	50	12	120	90	180	441	950
AACCI12	M12 x 80	-	20	90	80	85	14	160	120	240	571	1381

AC-TO Loose bolt 6.8

CODE	MXL	MAX. FIXTURE THICKNESS	DRILL Ø	HOLE DEPTH MIN.	MIN. ANCHOR DEPTH	INSTALLATION KEY	TORQUE (NM)	Ø ELEMENT TO FIX	MIN. SUBSTRATE THICKNESS	MIN. DISTANCE TO EDGE "A"	MIN. DISTANCE FROM AXIS "B"	TENSION LOAD NON-CRACKED CONCRETE	SHEAR LOAD NON-CRACKED CONCRETE
AACTO06	M6 x 50	8	10	45	40	10	10	7	100	60	120	92	351
AACTO08	M8 x 60	8	14	60	50	13	25	9	100	75	150	98	640
AACTO10	M10 x 70	8	16	70	60	17	50	12	120	90	180	441	1014
AACTO12	M12 x 125	18	20	90	80	19	85	14	160	120	240	571	1473
AACTO16	M16 x 125	17	25	110	100	24	120	18	200	150	300	698	2744

AC-ES Projecting bolt

CODE	MXL	MAX. FIXTURE THICKNESS	DRILL Ø	HOLE DEPTH MIN.	MIN. ANCHOR DEPTH	INSTALLATION KEY	TORQUE (NM)	Ø ELEMENT TO FIX	MIN. SUBSTRATE THICKNESS	MIN. DISTANCE TO EDGE "A"	MIN. DISTANCE FROM AXIS "B"	TENSION LOAD NON-CRACKED CONCRETE	SHEAR LOAD NON-CRACKED CONCRETE
AACES06	M6 x 60	8	10	45	40	10	10	7	100	60	120	92	246
AACES08	M8 x 70	8	14	60	50	13	25	9	100	75	150	98	448
AACES10	M10 x 80	8	16	70	60	17	50	12	120	90	180	441	709
AACES12	M12 x 115	18	20	90	80	19	85	14	160	120	240	571	1031

AC-GA Hook bolt

CODE	MXL	APERTURE HOOK	DRILL Ø	HOLE DEPTH MIN.	MIN. ANCHOR DEPTH	INSTALLATION KEY	TORQUE (NM)	Ø ELEMENT TO FIX	MIN. SUBSTRATE THICKNESS	MIN. DISTANCE TO EDGE "A"	MIN. DISTANCE FROM AXIS "B"	TENSION LOAD NON-CRACKED CONCRETE	SHEAR LOAD NON-CRACKED CONCRETE
AACGA06	M6 x 55	10	10	45	40	10	10	7	100	60	120	80	-
AACGA08	M8 x 60	11	14	60	50	13	25	9	100	75	150	98	-
AACGA10	M10 x 73	14	16	70	60	17	50	12	120	90	180	243	-
AACGA12	M12 x 90	18	20	90	80	19	85	14	160	120	240	396	-

AC-AR Eye bolt

CODE	MXL	EYE BOLT Ø	DRILL Ø	HOLE DEPTH MIN.	MIN. ANCHOR DEPTH	INSTALLATION KEY	TORQUE (NM)	Ø ELEMENT TO FIX	MIN. SUBSTRATE THICKNESS	MIN. DISTANCE TO EDGE "A"	MIN. DISTANCE FROM AXIS "B"	TENSION LOAD NON-CRACKED CONCRETE	SHEAR LOAD NON-CRACKED CONCRETE
AACAR06	M6 x 55	10	10	45	40	10	10	7	100	60	120	92	-
AACAR08	M8 x 60	12	14	60	50	13	25	9	100	75	150	98	-
AACAR10	M10 x 73	14	16	70	60	17	50	12	120	90	180	441	-
AACAR12	M12 x 90	17	20	90	80	19	85	14	160	120	240	571	-

HI Anti-spin sleeve anchor, for heavy-duty loads

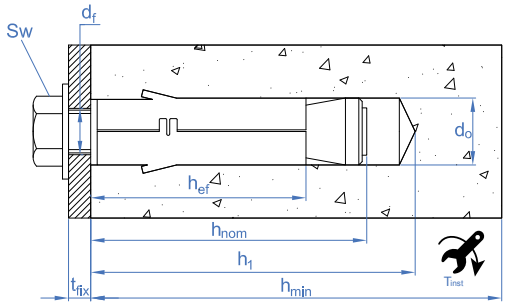

HI-CA Shield

CODE	MXL	MAX. FIXTURE THICKNESS	DRILL Ø	HOLE DEPTH MIN.	MIN. ANCHOR DEPTH	TORQUE (NM)	Ø ELEMENT TO FIX	MIN. SUBSTRATE THICKNESS	MIN. DISTANCE TO EDGE "A"	MIN. DISTANCE FROM AXIS "B"	TENSION LOAD NON-CRACKED CONCRETE	SHEAR LOAD NON-CRACKED CONCRETE
AHICA0645	M6 x 45	-	12	60	45	10	7	100	45	90	41	392
AHICA0855	M8 x 55	-	14	65	50	20	9	100	55	105	163	494
AHICA1065	M10 x 65	-	16	75	60	40	12	100	70	135	237	721
AHICA1275	M12 x 75	-	20	90	70	65	14	110	85	165	332	1841
AHICA1690	M16 x 90	-	24	105	100	150	18	140	105	210	424	2797

HI-CI A2 Stainless steel shield

CODE	MXL	MAX. FIXTURE THICKNESS	DRILL Ø	HOLE DEPTH MIN.	MIN. ANCHOR DEPTH	TORQUE (NM)	Ø ELEMENT TO FIX	MIN. SUBSTRATE THICKNESS	MIN. DISTANCE TO EDGE "A"	MIN. DISTANCE FROM AXIS "B"	TENSION LOAD NON-CRACKED CONCRETE	SHEAR LOAD NON-CRACKED CONCRETE
AHICI0645	M6 x 60	-	12	60	45	10	7	100	45	90	360	329
AHICI0855	M8 x 65	-	14	65	50	20	9	100	55	105	542	600
AHICI1065	M10 x 81	-	16	75	60	40	12	100	70	135	704	844

HI-TO Loose bolt 8.8

CODE	MXL	MAX. FIXTURE THICKNESS	DRILL Ø	HOLE DEPTH MIN.	MIN. ANCHOR DEPTH	INSTALLATION KEY	TORQUE (NM)	Ø ELEMENT TO FIX	MIN. SUBSTRATE THICKNESS	MIN. DISTANCE TO EDGE "A"	MIN. DISTANCE FROM AXIS "B"	TENSION LOAD NON-CRACKED CONCRETE	SHEAR LOAD NON-CRACKED CONCRETE
AHITO0645	M6 x 50	8	12	60	45	10	10	7	100	45	90	41	392
AHITO0855	M8 x 60	15	14	65	50	13	20	9	100	55	105	163	494
AHITO1065	M10 x 80	23	16	75	60	17	40	12	100	70	135	237	721
AHITO1275	M12 x 100	30	20	90	70	19	65	14	110	85	165	332	1841
AHITO1690	M16 x 110	17	24	105	100	24	150	18	140	105	210	424	2797

HI-GA Hook bolt

CODE	MXL	APERTURE HOOK	DRILL Ø	HOLE DEPTH MIN.	MIN. ANCHOR DEPTH	INSTALLATION KEY	TORQUE (NM)	MIN. SUBSTRATE THICKNESS	MIN. DISTANCE TO EDGE "A"	MIN. DISTANCE FROM AXIS "B"	TENSION LOAD NON-CRACKED CONCRETE	SHEAR LOAD NON-CRACKED CONCRETE
AHIGA0645	M6 x 55	10	12	60	45	10	10	100	45	90	41	-
AHIGA0855	M8 x 60	11	14	65	50	13	20	100	55	105	155	-
AHIGA1065	M10 x 73	14	16	75	60	17	40	100	70	135	237	-
AHIGA1275	M12 x 90	18	20	90	70	19	65	110	85	165	332	-
AHIGA1690	M16 x 110	19	24	105	100	24	150	140	105	210	424	-

HI-AR Eye bolt

CODE	MXL	EYE BOLT Ø	DRILL Ø	HOLE DEPTH MIN.	MIN. ANCHOR DEPTH	INSTALLATION KEY	TORQUE (NM)	MIN. SUBSTRATE THICKNESS	MIN. DISTANCE TO EDGE "A"	MIN. DISTANCE FROM AXIS "B"	TENSION LOAD NON-CRACKED CONCRETE	SHEAR LOAD NON-CRACKED CONCRETE
AHIAR0645	M6 x 60	10	12	60	45	10	10	100	45	90	41	-
AHIAR0855	M8 x 65	12	14	65	50	13	20	100	55	105	163	-
AHIAR1065	M10 x 81	14	16	75	60	17	40	100	70	135	237	-
AHIAR1275	M12 x 98	17	20	90	70	19	65	110	85	165	332	-
AHIAR1690	M16 x 120	23	24	105	100	24	150	140	105	210	424	-

EPS Metal anchor for fixing window and door frames

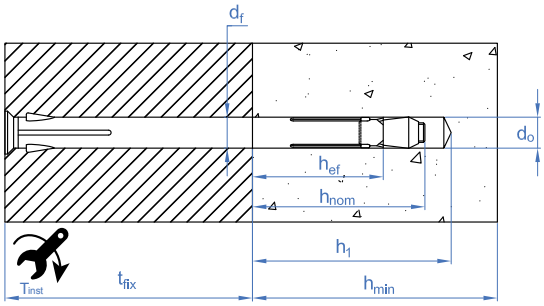

EPS Metal anchor for fixing window and door frames

CODE	MXL	MAX. FIXTURE THICKNESS	DRILL Ø	HOLE DEPTH MIN.	MIN. ANCHOR DEPTH	TORQUE (NM)	Ø ELEMENT TO FIX	MIN. SUBSTRATE THICKNESS	TENSION LOAD NON-CRACKED CONCRETE	SHEAR LOAD CRACKED CONCRETE
EPS6072	M6 x 72	40	10	60	40	4	10	70	170	-
EPS6092	M6 x 92	60	10	60	40	4	10	70	170	-
EPS6112	M6 x 112	80	10	60	40	4	10	70	170	-
EPS6132	M6 x 132	100	10	60	40	4	10	70	170	-
EPS6152	M6 x 152	120	10	60	40	4	10	70	170	-
EPS6182	M6 x 182	150	10	60	40	4	10	70	170	-

TRA Express nail for batten fixings to concrete floors

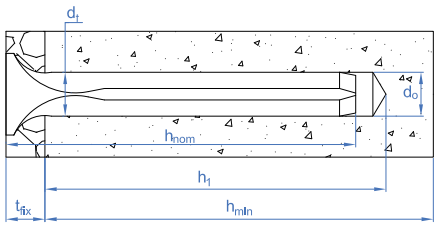

TRA Express nail for batten fixings to concrete floors

CODE	MXL	MAX. FIXTURE THICKNESS	DRILL Ø	HOLE DEPTH MIN.	MIN. ANCHOR DEPTH	Ø ELEMENT TO FIX	MIN. SUBSTRATE THICKNESS	TENSION LOAD NON-CRACKED CONCRETE	SHEAR LOAD CRACKED CONCRETE
TRA6050	6 x 50	20	6	40	30	6	35	40	-
TRA6060	6 x 60	30	6	40	30	6	35	40	-
TRA6080	6 x 80	50	6	40	30	6	35	40	-
TRA8070	8 x 70	30	8	50	40	8	45	50	-
TRA8090	8 x 90	50	8	50	40	8	45	50	-
TRA8110	8 x 110	70	8	50	40	8	45	50	-
TRA8130	8 x 130	90	8	50	40	8	45	50	-
TRA8150	8 x 150	110	8	50	40	8	45	50	-

MO Chemical anchor for heavy loads, for use in hollow and solid elements.

CONCRETE SET UP

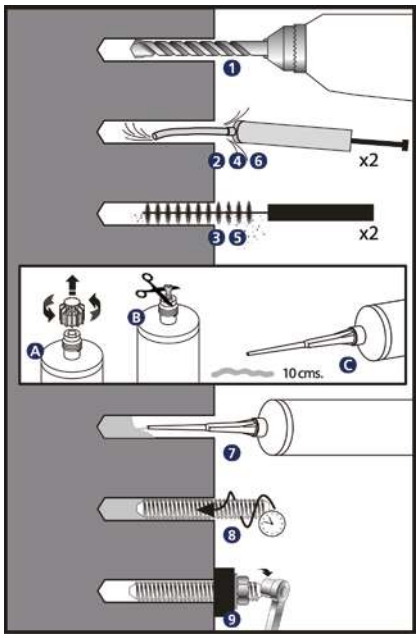

❶ DRILL

Check:
- The concrete base is compact and porosity is insignificant.
- That the product is suitable for wet, dry or flooded drill holes.
- Cartridge temperature is correct (check table).
- Base material temperature is correct (check table.

Use drill in percussion or hammer mode.
Drill to the specified diameter and depth values specified in the product data sheet.

❷ - ❻ BLOW AND CLEAN

Clear the drill holes completely of dust and fragments by following the procedure shown in the picture. Use the air pump and brush.
If the product is not suitable for wet drill holes and the hole is flooded, the water inside must be removed before mortar is injected.

A - B* - C OPEN CARTRIDGE

Screw the nozzle into the cartridge and place the assembly in the application gun. Squeeze on the trigger repeatedly until the mortar comes out of the nozzle in a uniform grey colour. Any iridescence indicates improper mixing. Always discard the first two doses of each cartridge: these are never to be used for fixing. *For 300 ml cartridges, cut end of bag, behind seal clip. ** Valid only for 300 ml and 410 ml cartridges. For MOPURE and MOPUR3 see technical data sheet

❼ INJECT MORTAR

Insert the nozzle to the bottom of the drill hole and apply mortar: gradually remove the nozzle, ensuring there are no air bubble.
Fill the hole to ½ and ¾ of its depth.
In the event of not fully using the cartridge, leave nozzle attached. Only change if using again and handling time has expired, remembering to discard the first two doses of mortar.

❽ INSTALLATION

Introduce the stud to be installed by screwing it lightly down to the installation depth value manually; ensuring the mortar covers the stud thread. The introduction of the anchor must take place within the handling time. The mortar must seep from the top of the drill hole to ensure it is completely full and there are no gaps between the stud and the drill hole.

❾ APPLY TORQUE

Once the curing time has elapsed, apply torque, never exceeding the values indicated in the table.

MASONRY SET UP

❶ DRILL

Check:
- The concrete base is compact and porosity is insignificant.
- That the product is suitable for wet, dry or flooded drill holes.
- Cartridge temperature is correct (check table).
- Base material temperature is correct (check table).

Use drill in rotation mode.
Drill to the specified diameter and depth values specified in the product data sheet.

❷ - ❻ BLOW AND CLEAN

Clear the drill holes completely of dust and fragments by following the procedure shown in the picture.
If the drill hole is flooded, the water must be removed before mortar is injected.

❹ POSITION SLEEVE (S)

Insert the metal or plastic sleeve into the drill hole so it is level with the surface of the base material.

A - B* - C OPEN CARTRIDGE**

Screw the nozzle into the cartridge and place the assembly in the application gun. Squeeze on the trigger repeatedly until the mortar comes out of the nozzle in a uniform grey colour. Any iridescence indicates improper mixing. Always discard the first two doses of each cartridge, these are never to be used for fixing. *For 170 ml and 300 ml cartridges, cut end of bag, behind seal clip. ** Valid only for 300 ml and 410 ml cartridges. For MOPURE and MOPUR3 see technical data sheet.

❺ INJECT MORTAR

Insert the nozzle to the bottom of the drill hole and apply mortar: gradually remove the nozzle, ensuring there are no air bubbles. Fill the sleeve fully.
In the event of not fully using the cartridge, leave nozzle attached. Only change if using again and handling time has expired, remembering to discard the first two doses of mortar.

❽ INSTALLATION

Introduce the stud to be installed by screwing it lightly down to the installation depth value manually; ensuring the mortar covers the stud thread. The introduction of the anchor must take place within the handling time. The mortar must seep from the top of the sleeve hole to ensure it is completely full and there are no gaps between the stud and the drill hole.

❼ APPLY TORQUE

Once the curing time has elapsed, apply torque, never exceeding the values indicated in the table.

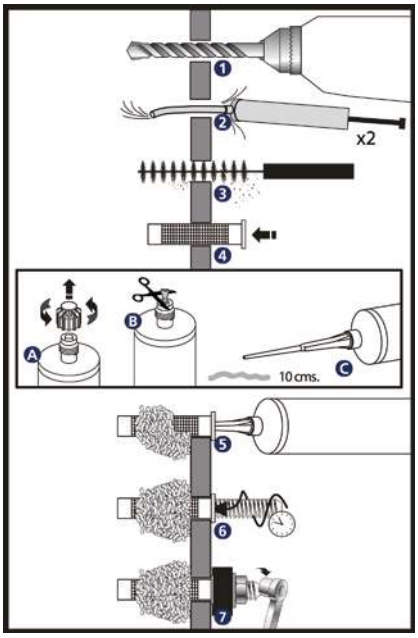

INSTALLATION WITH PLASTIC SLEEVE

SIZE	M8	M10	M12
OUTER SLEEVE DIAMETER	15	15	20
DRILL HOLE LENGTH	90	90	90
PLASTIC SLEEVE	**MOTN15085**	**MOTN15085**	**MOTN20085**

INSTALLATION WITH STEEL THREADED SLEEVE

SIZE	M8	M10	M12
OUTER SLEEVE DIAMETER	15	20	20
DRILL HOLE LENGTH	90	90	90
METAL THREADED SLEEVE	**MOTR008**	**MOTR010**	**MOTR012**
PLASTIC SLEEVE	**MOTN15085**	**MOTN20085**	**MOTN20085**

MANIPULATION / CURED TIMES

Minutes

		0 / 5	5 / 10	10 / 15	15 / 20	20 / 25	25, 30	30 / 35	35 / 40	+40
MO-P	HANDLING	18	12	6	6	4	3	2	1,5	1,5
	CURING	120	120	80	80	40	30	20	15	10
MO-PS	HANDLING	18	10	6	6	5	4	4	--	--
	CURING	145	145	85	85	40	35	35	--	--
MO-PSP	HANDLING	18	10	6	6	5	4	4	--	--
	CURING	145	145	85	85	40	35	35	--	--
MO-V	HANDLING	18	12	6	6	4	3	2	1,5	1,5
	CURING	120	120	80	80	40	30	20	15	10
MO-VS	HANDLING	18	10	6	6	5	4	4	--	--
	CURING	145	145	85	85	50	40	35	--	--
MO-H	HANDLING	--	10	8	6	5	4	--	--	--
	CURING	--	145	85	75	50	40	--	--	--
MO-HW	HANDLING	10	5	5	5	100 s	--	--	--	--
	CURING	75	50	50	50	20	--	--	--	--
MOPU-RE	HANDLING	--	20	20	15	11	8	6	4	3
	CURING	--	1440	720	480	420	360	300	240	180
MO-PUR3	HANDLING	300	150	40	25	18	12	8	6	--
	CURING	1440	1440	1080	720	480	360	240	120	--
MO-PU	HANDLING	18	12	6	6	4	3	2	1,5	1,5
	CURING	120	120	80	80	40	30	20	15	10

ANFA Scaffolding anchoring

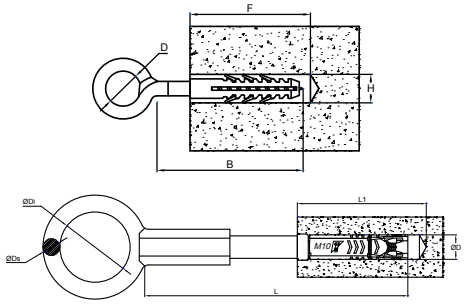

AN-23 Eye diameter 23 mm

CODE	MXL	DRILL Ø	HOLE DEPTH MIN.	MIN. ANCHOR DEPTH	MIN. SUBSTRATE THICKNESS	EYE BOLT Ø	TENSION LOAD NON-CRACKED CONCRETE
ANFA2309	12 x 90	14 o 16	100	90	130	23	119
ANFA2312	12 x 120	14 o 16	130	120	160	23	119
ANFA2316	12 x 160	14 o 16	170	160	200	23	119
ANFA2319	12 x 190	14 o 16	200	190	230	23	119
ANFA2323	12 x 230	14 o 16	240	230	270	23	119
ANFA2330	12 x 300	14 o 16	310	300	340	23	119
ANFA2335	12 x 350	14 o 16	360	350	390	23	119

AN-51

Eye diameter 51 mm

CODE	MXL	DRILL Ø	HOLE DEPTH MIN.	MIN. ANCHOR DEPTH	MIN. SUBSTRATE THICKNESS	EYE BOLT Ø	TENSION LOAD NON-CRACKED CONCRETE
ANFA5114	12 x 140	14 o 16	150	140	180	51	119
ANFA5116	12 x 160	14 o 16	170	160	200	51	119
ANFA5120	12 x 200	14 o 16	210	200	240	51	119
ANFA5124	12 x 240	14 o 16	250	240	280	51	119

AN-50 CT

Eye diameter 50 mm + zamak shield M10

CODE	MXL	HOLE DEPTH MIN.	MIN. SUBSTRATE THICKNESS	EYE BOLT Ø	TENSION LOAD NON-CRACKED CONCRETE
ANFAZ5021	M10 x 210	120	160	50	200

CA-QU

Epoxy resin, quartz and a phial of hardener. Opt.8 ETA Assessed

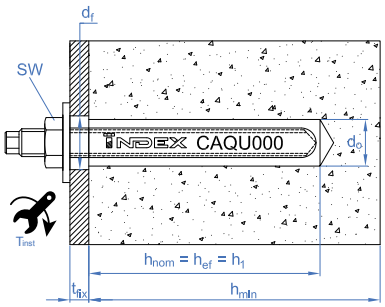

CA-QU

Epoxy resin, quartz and a phial of hardener. Option 8 ETA Assessed

CODE	MXL	MAX. FIXTURE THICKNESS	DRILL Ø	HOLE DEPTH MIN.	MIN. ANCHOR DEPTH	INSTALLATION KEY	TORQUE (NM)	Ø ELEMENT TO FIX	MIN. SUBSTRATE THICKNESS	MIN. DISTANCE TO EDGE "A"	MIN. DISTANCE FROM AXIS "B"	TENSION LOAD NON-CRACKED CONCRETE	SHEAR LOAD NON-CRACKED CONCRETE
CAQU008	8 Ø9 / 17	17	10	80	80	13	10	9	110	120	240	809	524
CAQU010	10 Ø11 / 25	25	12	90	90	17	20	12	120	90	180	1214	815
CAQU012	12 Ø13 / 32	32	14	110	110	19	40	14	140	110	220	1618	1223
CAQU016	16 Ø17 / 44	44	18	125	125	24	80	18	160	125	250	2023	2272
CAQU020	20 Ø22 / 66	66	25	170	170	30	120	22	220	170	340	3034	3553
CAQU024	24 Ø24 / 62	62	28	210	210	36	180	26	260	210	420	3641	5126
CAQU030	30 Ø33 / 22	22	35	280	280	46	400	33	360	280	560	5461	8496

T-NUX

Universal high performance nylon plug

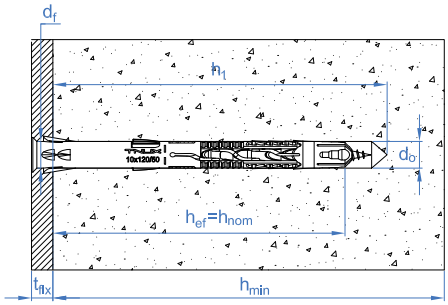

T-NUX A

Countersunk head. Zinc-plated. ETA Assessed

CODE	MXL	MAX. FIXTURE THICKNESS	DRILL Ø	HOLE DEPTH MIN.	MIN. ANCHOR DEPTH	INSTALLATION KEY	Ø ELEMENT TO FIX	MIN. SUBSTRATE THICKNESS	MIN. DISTANCE TO EDGE "A"	MIN. DISTANCE FROM AXIS "B"	TENSION LOAD NON-CRACKED CONCRETE	SHEAR LOAD NON-CRACKED CONCRETE
TNUXA08060	8 x 60	10	8	70	50	TX30	8 - 8,5	100	60	100	141	263
TNUXA08080	8 x 80	10	8	90	70	TX30	8 - 8,5	100	60	100	141	263
TNUXA08100	8 x 100	30	8	90	70	TX30	8 - 8,5	100	60	100	141	263
TNUXA08120	8 x 120	50	8	90	70	TX30	8 - 8,5	100	60	100	141	263
TNUXA10060	10 x 60	10	10	70	50	TX40	10 - 11	100	60	100	202	364
TNUXA10080	10 x 80	10	10	90	70	TX40	10 - 11	100	70	100	202	364
TNUXA10100	10 x 100	30	10	90	70	TX40	10 - 11	100	70	100	202	364
TNUXA10120	10 x 120	50	10	90	70	TX40	10 - 11	100	70	100	202	364
TNUXA10140	10 x 140	70	10	90	70	TX40	10 - 11	100	70	100	202	364
TNUXA10160	10 x 160	90	10	90	70	TX40	10 - 11	100	70	100	202	364
TNUXA10180	10 x 180	110	10	90	70	TX40	10 - 11	100	70	100	202	364
TNUXA10200	10 x 200	130	10	90	70	TX40	10 - 11	100	70	100	202	364
TNUXA10230	10 x 230	160	10	90	70	TX40	10 - 11	100	70	100	202	364

T-NUX A A4

A4 Stainless steel. Countersunk head. ETA Assessed

CODE	MXL	MAX. FIXTURE THICKNESS	DRILL Ø	HOLE DEPTH MIN.	MIN. ANCHOR DEPTH	INSTALLATION KEY	Ø ELEMENT TO FIX	MIN. SUBSTRATE THICKNESS	MIN. DISTANCE TO EDGE "A"	MIN. DISTANCE FROM AXIS "B"	TENSION LOAD NON-CRACKED CONCRETE	SHEAR LOAD NON-CRACKED CONCRETE
TNXA408080	8 x 80	10	8	90	70	TX30	8 - 8,5	100	60	100	141	307
TNXA408100	8 x 100	30	8	90	70	TX30	8 - 8,5	100	60	100	141	307
TNXA408120	8 x 120	50	8	90	70	TX30	8 - 8,5	100	60	100	141	307
TNXA410080	10 x 80	10	10	90	70	TX40	10 - 11	100	70	100	202	425
TNXA410100	10 x 100	30	10	90	70	TX40	10 - 11	100	70	100	202	425
TNXA410120	10 x 120	50	10	90	70	TX40	10 - 11	100	70	100	202	425
TNXA410140	10 x 140	70	10	90	70	TX40	10 - 11	100	70	100	202	425

T-NUX E

Hexagonal head. Zinc-plated. ETA Assessed

CODE	MXL	MAX. FIXTURE THICKNESS	DRILL Ø	HOLE DEPTH MIN.	MIN. ANCHOR DEPTH	INSTALLATION KEY	Ø ELEMENT TO FIX	MIN. SUBSTRATE THICKNESS	MIN. DISTANCE TO EDGE "A"	MIN. DISTANCE FROM AXIS "B"	TENSION LOAD NON-CRACKED CONCRETE	SHEAR LOAD NON-CRACKED CONCRETE
TNUXE08060	8 x 60		8	70	50	SW10/TX30	8 - 8,5	100	60	100	141	263
TNUXE08080	8 x 80	10	8	90	70	SW10/TX30	8 - 8,5	100	60	100	141	263
TNUXE08100	8 x 100	30	8	90	70	SW10/TX30	8 - 8,5	100	60	100	141	263
TNUXE08120	8 x 120	50	8	90	70	SW10/TX30	8 - 8,5	100	60	100	141	263
TNUXE10060	10 x 60		10	70	50	SW13/TX40	10 - 11	100	70	100	202	364
TNUXE10080	10 x 80	10	10	90	70	SW13/TX40	10 - 11	100	70	100	202	364
TNUXE10100	10 x 100	30	10	90	70	SW13/TX40	10 - 11	100	70	100	202	364
TNUXE10120	10 x 120	50	10	90	70	SW13/TX40	10 - 11	100	70	100	202	364
TNUXE10140	10 x 140	70	10	90	70	SW13/TX40	10 - 11	100	70	100	202	364
TNUXE10160	10 x 160	90	10	90	70	SW13/TX40	10 - 11	100	70	100	202	364
TNUXE10180	10 x 180	110	10	90	70	SW13/TX40	10 - 11	100	70	100	202	364
TNUXE10200	10 x 200	130	10	90	70	SW13/TX40	10 - 11	100	70	100	202	364
TNUXE10230	10 x 230	160	10	90	70	SW13/TX40	10 - 11	100	70	100	202	364

T-NUX E A4

A4 Stainless steel. Hexagonal head. ETA Assessed

CODE	MXL	MAX. FIXTURE THICKNESS	DRILL Ø	HOLE DEPTH MIN.	MIN. ANCHOR DEPTH	INSTALLATION KEY	Ø ELEMENT TO FIX	MIN. SUBSTRATE THICKNESS	MIN. DISTANCE TO EDGE "A"	MIN. DISTANCE FROM AXIS "B"	TENSION LOAD NON-CRACKED CONCRETE	SHEAR LOAD NON-CRACKED CONCRETE
TNXE408080	8 x 80	10	8	90	70	SW10/TX30	8 - 8,5	100	60	100	141	307
TNXE408100	8 x 100	30	8	90	70	SW10/TX30	8 - 8,5	100	60	100	141	307
TNXE410080	10 x 80	10	10	90	70	SW13/TX40	10 - 11	100	70	100	202	425
TNXE410100	10 x 100	30	10	90	70	SW13/TX40	10 - 11	100	70	100	202	425
TNXE410120	10 x 120	50	10	90	70	SW13/TX40	10 - 11	100	70	100	202	425
TNXE410140	10 x 140	70	10	90	70	SW13/TX40	10 - 11	100	70	100	202	425

T-NUX T

Tamperproof Truss Head. Zinc-plated. ETA Assessed

CODE	MXL	MAX. FIXTURE THICKNESS	DRILL Ø	HOLE DEPTH MIN.	MIN. ANCHOR DEPTH	INSTALLATION KEY	Ø ELEMENT TO FIX	MIN. SUBSTRATE THICKNESS	MIN. DISTANCE TO EDGE "A"	MIN. DISTANCE FROM AXIS "B"	TENSION LOAD NON-CRACKED CONCRETE	SHEAR LOAD NON-CRACKED CONCRETE
TNUXT10080	10 x 80	10	10	70	50	TX40	10 - 11	100	70	100	202	425
TNUXT10100	10 x 100	30	10	90	70	TX40	10 - 11	100	70	100	202	425
TNUXT10120	10 x 120	50	10	90	70	TX40	10 - 11	100	70	100	202	425
TNUXT10140	10 x 140	70	10	90	70	TX40	10 - 11	100	70	100	202	425
TNUXT10160	10 x 160	90	10	90	70	TX40	10 - 11	100	70	100	202	425

T-FUX E

Cylindrical head wall plug. Hexagonal head screw. Zinc-plated. ETA Assessed

CODE	MXL	MAX. FIXTURE THICKNESS	DRILL Ø	HOLE DEPTH MIN.	MIN. ANCHOR DEPTH	INSTALLATION KEY	Ø ELEMENT TO FIX	MIN. SUBSTRATE THICKNESS	MIN. DISTANCE TO EDGE "A"	MIN. DISTANCE FROM AXIS "B"	TENSION LOAD NON-CRACKED CONCRETE	SHEAR LOAD NON-CRACKED CONCRETE
TFUXE10080	10 x 80	10	10	90	70	SW13/TX40	10 - 11	100	70	100	202	425
TFUXE10100	10 x 100	30	10	90	70	SW13/TX40	10 - 11	100	70	100	202	425
TFUXE10120	10 x 120	50	10	90	70	SW13/TX40	10 - 11	100	70	100	202	425

TCA

Polyamide 6.6 hammerfix nylon plug

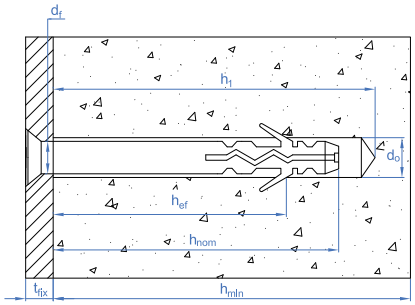

TC-6A

6 winged nylon plug with countersunk screw

CODE	MXL	MAX. FIXTURE THICKNESS	DRILL Ø	HOLE DEPTH MIN.	N° RECESS	TENSION LOAD NON-CRACKED CONCRETE	SHEAR LOAD NON-CRACKED CONCRETE	TENSION LOAD SOLID BRICK	TENSION LOAD HOLLOW BRICK
TC6A08080	8 x 80	15	8	70	TX30	64	37	37	18
TC6A08100	8 x 100	35	8	70	TX30	64	37	37	18

CODE	MXL	MAX. FIXTURE THICKNESS	DRILL Ø	HOLE DEPTH MIN.	N° RECESS	TENSION LOAD NON-CRACKED CONCRETE	SHEAR LOAD NON-CRACKED CONCRETE	TENSION LOAD SOLID BRICK	TENSION LOAD HOLLOW BRICK
TC6A08120	8 x 120	55	8	70	TX30	64	37	37	18
TC6A10100	10 x 100	25	10	80	TX40	109	55	53	26
TC6A10120	10 x 120	40	10	80	TX40	109	55	53	26
TC6A10140	10 x 140	60	10	80	TX40	109	55	53	26
TC6A10160	10 x 160	85	10	80	TX40	109	55	53	26
TC6A10200	10 x 200	125	10	80	TX40	109	55	53	26

TC-6E

6 winged nylon plug with hexagonal screw

CODE	MXL	MAX. FIXTURE THICKNESS	DRILL Ø	HOLE DEPTH MIN.	N° RECESS	TENSION LOAD NON-CRACKED CONCRETE	SHEAR LOAD NON-CRACKED CONCRETE	TENSION LOAD SOLID BRICK	TENSION LOAD HOLLOW BRICK
TC6E08080	8 x 80	15	8	70	10	64	37	37	18
TC6E08100	8 x 100	35	8	70	10	64	37	37	18
TC6E08120	8 x 120	55	8	70	10	64	37	37	18
TC6E10100	10 x 100	25	10	80	13	109	55	53	26
TC6E10120	10 x 120	40	10	80	13	109	55	53	26
TC6E10140	10 x 140	60	10	80	13	109	55	53	26
TC6E10160	10 x 160	85	10	80	13	109	55	53	26
TC6E10200	10 x 200	125	10	80	13	109	55	53	26

TC-2A

2 winged nylon plug with countersunk screw

CODE	MXL	MAX. FIXTURE THICKNESS	DRILL Ø	HOLE DEPTH MIN.	N° RECESS	TENSION LOAD NON-CRACKED CONCRETE	SHEAR LOAD NON-CRACKED CONCRETE	TENSION LOAD SOLID BRICK
TC2A06060	6 x 60	30	6	35	2	34	28	10
TC2A08060	8 x 60	20	8	45	3	34	37	19
TC2A08080	8 x 80	40	8	45	3	40	37	19
TC2A08100	8 x 100	60	8	45	3	40	37	19
TC2A08120	8 x 120	80	8	45	3	40	37	19
TC2A10065	10 x 65	20	10	50	4	45	55	22
TC2A10080	10 x 80	35	10	50	4	45	55	22
TC2A10100	10 x 100	55	10	50	4	45	55	22
TC2A10115	10 x 115	70	10	50	4	45	55	22
TC2A10135	10 x 135	90	10	50	4	45	55	22
TC2A10160	10 x 160	115	10	50	4	45	55	22

TC-SP

High expansion hammerfix plug

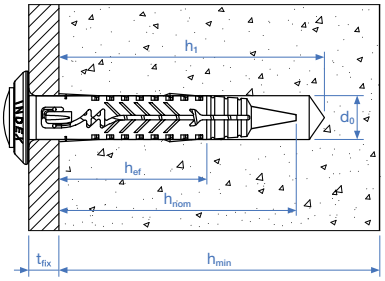

TC-SP

With countersunk head

CODE	MXL	MAX. FIXTURE THICKNESS	DRILL Ø	HOLE DEPTH MIN.	N° RECESS	TENSION LOAD NON-CRACKED CONCRETE	TENSION LOAD SOLID BRICK
TCSP05027	5 x 27	5	5	25		17	5
TCSP06032	6 x 32	5	6	30		26	7
TCSP06040	6 x 40	10	6	30		26	7

TC

Polyamide 6.6 Hammerfix plug. Preassembled saw-tooth screw

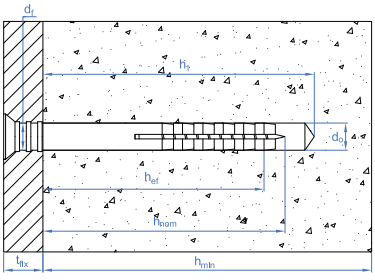

TC-CA

Countersunk plug

CODE	MXL	MAX. FIXTURE THICKNESS	DRILL Ø	HOLE DEPTH MIN.	N° RECESS	TENSION LOAD NON-CRACKED CONCRETE	SHEAR LOAD NON-CRACKED CONCRETE	TENSION LOAD SOLID BRICK
TCCA05025	5 x 25	5	5	30	PZ2	13	20	3
TCCA05030	5 x 30	5	5	30	PZ2	13	20	3
TCCA05035	5 x 35	10	5	30	PZ2	13	20	3

CODE	MXL	MAX. FIXTURE THICKNESS	DRILL Ø	HOLE DEPTH MIN.	N° RECESS	TENSION LOAD NON-CRACKED CONCRETE	SHEAR LOAD NON-CRACKED CONCRETE	TENSION LOAD SOLID BRICK
TCCA05050	5 x 50	25	5	30	PZ2	13	20	3
TCCA06035	6 x 35	10	6	35	PZ2	18	26	4
TCCA06040	6 x 40	10	6	35	PZ2	18	26	4
TCCA06050	6 x 50	20	6	35	PZ2	18	26	4
TCCA06060	6 x 60	30	6	35	PZ2	18	26	4
TCCA06070	6 x 70	40	6	35	PZ2	18	26	4
TCCA06080	6 x 80	50	6	35	PZ2	18	26	4
TCCA08060	8 x 60	20	8	45	PZ3	29	30	7
TCCA08080	8 x 80	40	8	45	PZ3	29	30	7
TCCA08100	8 x 100	60	8	45	PZ3	29	30	7
TCCA08120	8 x 120	80	8	45	PZ3	29	30	7
TCCA08140	8 x 135	100	8	45	PZ3	29	30	7

TC-A2

Countersunk plug and A2 stainless steel screw

CODE	MXL	MAX. FIXTURE THICKNESS	DRILL Ø	HOLE DEPTH MIN.	N° RECESS	TENSION LOAD NON-CRACKED CONCRETE	SHEAR LOAD NON-CRACKED CONCRETE	TENSION LOAD SOLID BRICK
TCA205030	5 x 30	5	5	30	PZ2	13	20	3
TCA206040	6 x 40	10	6	35	PZ2	18	26	4
TCA206060	6 x 60	30	6	35	PZ2	18	26	4
TCA208060	8 x 60	20	8	45	PZ3	29	30	7
TCA208080	8 x 80	40	8	45	PZ3	29	30	7
TCA208100	8 x 100	60	8	45	PZ3	29	30	7

TC-CC

Cylindrical head plug

CODE	MXL	MAX. FIXTURE THICKNESS	DRILL Ø	HOLE DEPTH MIN.	N° RECESS	TENSION LOAD NON-CRACKED CONCRETE	SHEAR LOAD NON-CRACKED CONCRETE	TENSION LOAD SOLID BRICK
TCCC05025	5 x 25	5	5	30	PZ2	13	20	3
TCCC05030	5 x 30	5	5	30	PZ2	13	20	3
TCCC05035	5 x 35	10	5	30	PZ2	13	20	3
TCCC05050	5 x 50	25	5	30	PZ2	13	20	3
TCCC06035	6 x 35	10	6	35	PZ2	18	26	4
TCCC06040	6 x 40	15	6	35	PZ2	18	26	4
TCCC06050	6 x 50	25	6	35	PZ2	18	26	4
TCCC06060	6 x 60	35	6	35	PZ2	18	26	4
TCCC06070	6 x 70	45	6	35	PZ2	18	26	4
TCCC06080	6 x 80	55	6	35	PZ2	18	26	4
TCCC08060	8 x 60	20	8	45	PZ3	18	30	7
TCCC08080	8 x 80	40	8	45	PZ3	29	30	7
TCCC08100	8 x 100	60	8	45	PZ3	29	30	7
TCCC08120	8 x 120	80	8	45	PZ3	29	30	7
TCCC08140	8 x 135	100	8	45	PZ3	29	30	7

AIS

Fixing plug for insulation panels

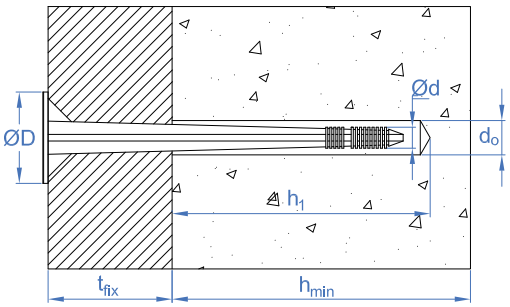

AIS-C

Plug with polyamide nail

CODE	MXL	METRIC	LENGTH	DRILL Ø	MIN. SUBSTRATE THICKNESS	HOLE DEPTH MIN.	MIN. ANCHOR DEPTH	MAX. FIXTURE THICKNESS	MIN. DISTANCE TO EDGE "A"	MIN. DISTANCE FROM AXIS "B"	ØD(MM)	TENSION LOAD NON-CRACKED CONCRETE	TENSION LOAD HOLLOW BRICK	TENSION LOAD SOLID BRICK	TENSION LOAD CRACKED CONCRETE
AISC10070	10 x 70	10	70	10	100	50	40	10-20	100	100	60	32	3	30	32
AISC10090	10 x 90	10	90	10	100	50	40	30-40	100	100	60	32	3	30	32
AISC10100	10 x 100	10	100	10	100	50	40	40-50	100	100	60	32	3	30	32
AISC10110	10 x 110	10	110	10	100	50	40	50-60	100	100	60	32	3	30	32
AISC10120	10 x 120	10	120	10	100	50	40	60-70	100	100	60	32	3	30	32
AISC10130	10 x 130	10	130	10	100	50	40	70-80	100	100	60	32	3	30	32
AISC10140	10 x 140	10	140	10	100	50	40	80-90	100	100	60	32	3	30	32
AISC10160	10 x 160	10	160	10	100	50	40	100-110	100	100	60	32	3	30	32
AISC10180	10 x 180	10	180	10	100	50	40	120-130	100	100	60	32	3	30	32
AISC10200	10 x 200	10	200	10	100	50	40	140-150	100	100	60	32	3	30	32

CODE	MXL	METRIC	LENGTH	DRILL Ø	MIN. SUBSTRATE THICKNESS	HOLE DEPTH MIN.	MIN. ANCHOR DEPTH	MAX. FIXTURE THICKNESS	MIN. DISTANCE TO EDGE "A"	MIN. DISTANCE FROM AXIS "B"	ØD(MM)	TENSION LOAD NON-CRACKED CONCRETE	TENSION LOAD HOLLOW BRICK	TENSION LOAD SOLID BRICK	TENSION LOAD CRACKED CONCRETE
AISC10220	10 x 220	10	220	10	100	50	40	150-170	100	100	60	32	3	30	32
AISC10260	10 x 260	10	260	10	100	50	40	200-210	100	100	60	32	3	30	32

AIS-S
Plug with metalic nail and polyamide cap

CODE	MXL	METRIC	LENGTH	DRILL Ø	MIN. SUBSTRATE THICKNESS	HOLE DEPTH MIN.	MIN. ANCHOR DEPTH	MAX. FIXTURE THICKNESS	MIN. DISTANCE TO EDGE "A"	MIN. DISTANCE FROM AXIS "B"	ØD(MM)	TENSION LOAD NON-CRACKED CONCRETE	TENSION LOAD HOLLOW BRICK	TENSION LOAD SOLID BRICK	TENSION LOAD CRACKED CONCRETE
AISS10070	10 x 70	10	70	10	100	50	40	10-20	100	100	60	22	3	18	22
AISS10090	10 x 90	10	90	10	100	50	40	30-40	100	100	60	22	3	18	22
AISS10100	10 x 100	10	100	10	100	50	40	40-50	100	100	60	22	3	18	22
AISS10120	10 x 120	10	120	10	100	50	40	60-70	100	100	60	22	3	18	22
AISS10140	10 x 140	10	140	10	100	50	40	80-90	100	100	60	22	3	18	22
AISS10160	10 x 160	10	160	10	100	50	40	100-110	100	100	60	22	3	18	22
AISS10180	10 x 180	10	180	10	100	50	40	120-130	100	100	60	22	3	18	22
AISS10200	10 x 200	10	200	10	100	50	40	140-150	100	100	60	22	3	18	22
AISS10220	10 x 220	10	220	10	100	50	40	150-170	100	100	60	22	3	18	22
AISS10260	10 x 260	10	260	10	100	50	40	200-210	100	100	60	22	3	18	22

AIS
Plug

CODE	MXL	MAX. FIXTURE THICKNESS	DRILL Ø	HOLE DEPTH MIN.	MIN. ANCHOR DEPTH	WASHER Ø	TENSION LOAD NON-CRACKED CONCRETE
AIS08080	8 x 80	20 - 50	8	30	30	35	1
AIS08100	8 x 100	50 - 70	8	30	30	35	1
AIS08120	8 x 120	70 - 90	8	30	30	35	1
AIS08140	8 x 140	90 - 110	8	30	30	35	1

AIS-R
Support washer

CODE	MXL	ØD(MM)	D
AISR140	Ø140	140	11

AIS-W
Washer for use with screw

CODE	MXL	ØD(MM)	D
AISW060	Ø60	60	6

AIS-M
Metallic fixing plug

CODE	MXL	METRIC	LENGTH	DRILL Ø	MIN. SUBSTRATE THICKNESS	HOLE DEPTH MIN.	MIN. ANCHOR DEPTH	MAX. FIXTURE THICKNESS	MIN. DISTANCE TO EDGE "A"	MIN. DISTANCE FROM AXIS "B"	ØD(MM)
AISM08090	8 x 90	8	90	8	100	50	40	50	100	100	35
AISM08110	8 x 110	8	110	8	100	50	40	70	100	100	35
AISM08120	8 x 120	8	120	8	100	50	40	80	100	100	35
AISM08140	8 x 140	8	140	8	100	50	40	100	100	100	35
AISM08170	8 x 170	8	170	8	100	50	40	130	100	100	35
AISM08200	8 x 200	8	200	8	100	50	40	160	100	100	35
AISM08250	8 x 250	8	250	8	100	50	40	210	100	100	35
AISM08300	8 x 300	8	300	8	100	50	40	260	100	100	35

AIS-AM
Whaser for metallic fixing plug

CODE	MXL	ØD(MM)	L1	D
AISAM085	Ø85	85	0,5	9

TE
Spiral anchor

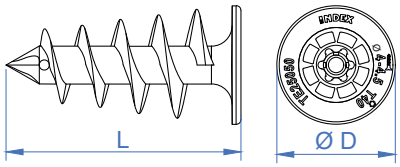

TE

CODE	MXL	LENGTH	ØD(MM)
TE25050	25 x 50	50	25
TE25090	25 x 90	90	25

TN4S 4-way expansion plug for all materials

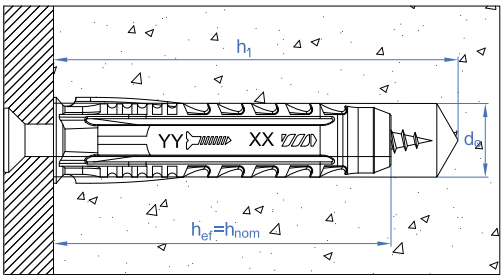

TN4S Plug

CODE	MXL	DRILL Ø	HOLE DEPTH MIN.	MIN. ANCHOR DEPTH	MIN. SUBSTRATE THICKNESS	TENSION LOAD NON-CRACKED CONCRETE	TENSION LOAD SOLID BRICK	TENSION LOAD HOLLOW BRICK	SCREW SIZE
TN4S05	5 x 25	5	30	25	35	15	7	4	TPPO 2,5-4
TN4S06	6 x 30	6	40	30	45	15	7	4	TPPO 3,5-4
TN4S08	8 x 40	8	50	40	55	40	16	8	TPPO 4,5 , TB 5-6
TN4S10	10 x 50	10	60	50	65	116	23	11	TB 6-8
TN4S12	12 x 60	12	70	60	75	108	40	20	TB 8-10
TN4S14	14 x 70	14	80	70	85	193	125	63	TB 10-12

TN4S-L Long plug

CODE	MXL	DRILL Ø	HOLE DEPTH MIN.	MIN. ANCHOR DEPTH	MIN. SUBSTRATE THICKNESS	TENSION LOAD NON-CRACKED CONCRETE	TENSION LOAD SOLID BRICK	TENSION LOAD HOLLOW BRICK	SCREW SIZE
TN4S06L	6 x 45	6	55	45	60	30	6	6	TPPO 3,5-4
TN4S08L	8 x 60	8	70	60	75	80	12	12	TPPO 4,5 , TB 5-6
TN4S10L	10 x 80	10	90	80	95	240	16	16	TB 6-8

MEDU Universal plug with collar and knot-like form

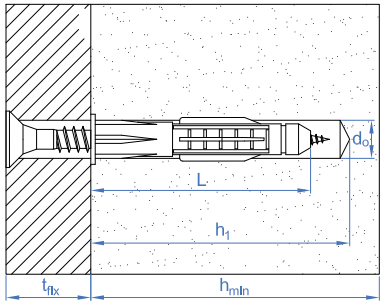

MEDU Polypropylene

CODE	MXL	DRILL Ø	HOLE DEPTH MIN.	MIN. SUBSTRATE THICKNESS	TENSION LOAD NON-CRACKED CONCRETE	TENSION LOAD SOLID BRICK	TENSION LOAD HOLLOW BRICK
MEDUB06	6 x 35	6	45	65	8	5	4
MEDUB07	8 x 42	8	50	70	12	5	4
MEDUB08	8 x 50	8	60	80	24	5	4
MEDUB10	10 x 60	10	75	95	70	7	5

TACON Nylon plug

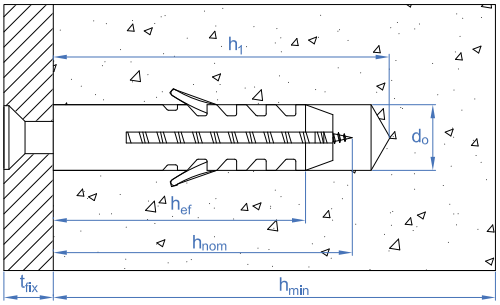

TACON/TACOL/TACOL-A Plug

CODE	MXL	DRILL Ø	HOLE DEPTH MIN.	MIN. ANCHOR DEPTH	MIN. SUBSTRATE THICKNESS	TENSION LOAD NON-CRACKED CONCRETE	TENSION LOAD SOLID BRICK	SCREW SIZE
TACON04	4 x 20	4	25	20	30	6	4	TPPO 2,5-3
TACON05/TACOL05/	5 x 25	5	35	25	40	7	5	TPPO 2,5-4

CODE	MXL	DRILL Ø	HOLE DEPTH MIN.	MIN. ANCHOR DEPTH	MIN. SUBSTRATE THICKNESS	TENSION LOAD NON-CRACKED CONCRETE	TENSION LOAD SOLID BRICK	SCREW SIZE
TACON06/TACOL06/TACOLA06	6 x 30	6	40	30	45	10	5	TPPO 3,5-4
TACON07	7 x 30	7	45	30	45	11	6	TPPO 4-4,5
TACON08/TACOL08	8 x 40	8	50	40	55	12	11	TPPO 4,5 , TB 5-6
TACON10/TACOL10	10 x 50	10	60	50	70	61	16	TB 6-8
TACON12/TACOL12	12 x 60	12	70	60	80	76	28	TB 8-10
TACON14	14 x 70	14	80	70	95	167	88	TB 10-12
TACON16	16 x 80	16	90	80	100	240	100	TB 12-14

IPA

Nylon plug in hollow bricks or solid materials

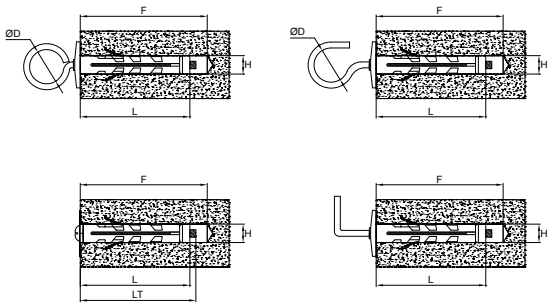

IPA-GR

Corner hook

CODE	MXL	MAX. FIXTURE THICKNESS	DRILL Ø	HOLE DEPTH MIN.	MIN. ANCHOR DEPTH	WASHER Ø	TENSION LOAD NON-CRACKED CONCRETE	TENSION LOAD SOLID BRICK
IPAGR09	M4 x 40	-	9	45	40	20	8	8
IPAGR12	M5 x 45	-	12	50	45	25	12	12

IPA-GN

Hook

CODE	MXL	MAX. FIXTURE THICKNESS	DRILL Ø	HOLE DEPTH MIN.	MIN. ANCHOR DEPTH	WASHER Ø	TENSION LOAD NON-CRACKED CONCRETE	TENSION LOAD SOLID BRICK
IPAGN09	M4 x 40	-	9	45	40	20	8	8
IPAGN12	M5 x 45	-	12	50	45	25	10	10

IPA-AR

Eye bolt

CODE	MXL	MAX. FIXTURE THICKNESS	DRILL Ø	HOLE DEPTH MIN.	MIN. ANCHOR DEPTH	WASHER Ø	TENSION LOAD NON-CRACKED CONCRETE	TENSION LOAD SOLID BRICK
IPAAR09	M4 x 40	-	9	45	40	20	8	8
IPAAR12	M5 x 45	-	12	50	45	25	10	10

IPA-TO

Screw

CODE	MXL	MAX. FIXTURE THICKNESS	DRILL Ø	HOLE DEPTH MIN.	MIN. ANCHOR DEPTH	WASHER Ø	TENSION LOAD NON-CRACKED CONCRETE	TENSION LOAD SOLID BRICK
IPATO09	M4 x 40	5	9	45	40	20	8	44
IPATO12	M5 x 45	5	12	50	45	25	12	56

TA-PL

Plastic plug (polypropylene)

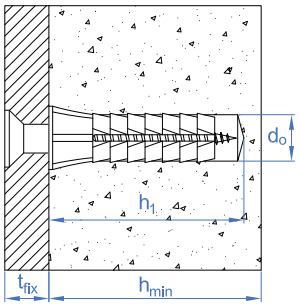

TA-PL

Plastic plug, polypropylene

CODE	MXL	DRILL Ø	HOLE DEPTH MIN.	MIN. SUBSTRATE THICKNESS	TENSION LOAD NON-CRACKED CONCRETE
TACOP05	5 x 21	5	30	35	5
TACOP06	6 x 22	6	30	35	5
TACOP07	7 x 23	7	30	35	6
TACOP08	8 x 27	8	35	40	9
TACOP09	9 x 30	9	35	40	9
TACOP10	10 x 35	10	40	45	13
TACOP11	10 x 43	10	50	55	15
TACOP12	12 x 45	12	50	55	17
TACOP14	14 x 48	14	55	60	28

BA-NO Gravity toggle for fixing lightweight in ceilings

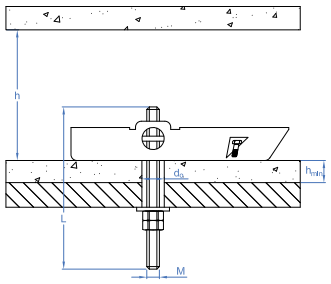

BA-ES Projecting bolt

CODE	MXL	MAX. JOINT THICKNESS BASE MATERIAL AND ELEMENT TO BE FIXED ≤	DRILL Ø	MINIMUN CAVITY "H"	REMOVAL OF CONCRETE BLOCKS	TENSION LOAD PLASTERBOARD	TENSION LOAD PLASTERBOARD
BAESM04	M4 x 100	74	14	70	10	5	5
BAESM05	M5 x 100	72	14	70	12	5	5
BAESM06	M6 x 100	68	16	75	13	6	6
BAESM08	M8 x 100	60	20	85	14	6	6

BA-GA Hook

CODE	MXL	MAX. JOINT THICKNESS BASE MATERIAL AND ELEMENT TO BE FIXED ≤	DRILL Ø	MINIMUN CAVITY "H"	REMOVAL OF CONCRETE BLOCKS	TENSION LOAD PLASTERBOARD	TENSION LOAD PLASTERBOARD
BAGAM04	M4 x 77	74	14	70	10	5	5
BAGAM05	M5 x 80	72	14	70	12	5	5
BAGAM06	M6 x 87	68	16	75	13	6	6
BAGAM08	M8 x 95	60	20	85	14	6	6

PA-LO Spring toggle

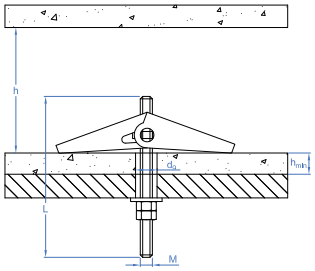

PA-ES Projecting bolt

CODE	MXL	MAX. JOINT THICKNESS BASE MATERIAL AND ELEMENT TO BE FIXED ≤	DRILL Ø	MINIMUN CAVITY "H"	REMOVAL OF CONCRETE BLOCKS	TENSION LOAD PLASTERBOARD	TENSION LOAD PLASTERBOARD
PAESM04	M4 x 100	75	12	26	10	5	5
PAESM05	M5 x 100	70	15	33	12	5	5
PAESM06	M6 x 100	66	18	37	13	6	6
PAESM08	M8 x 100	61	22	54	14	6	6

PA-GA Hook

CODE	MXL	MAX. JOINT THICKNESS BASE MATERIAL AND ELEMENT TO BE FIXED ≤	DRILL Ø	MINIMUN CAVITY "H"	REMOVAL OF CONCRETE BLOCKS	TENSION LOAD PLASTERBOARD	TENSION LOAD PLASTERBOARD
PAGAM04	M4 x 55	75	12	26	10	5	5
PAGAM05	M5 x 65	70	15	33	12	5	5
PAGAM06	M6 x 80	66	18	37	13	6	6
PAGAM08	M8 x 85	61	22	54	14	6	6

IN Indemoll anchor for hollow elements fixing

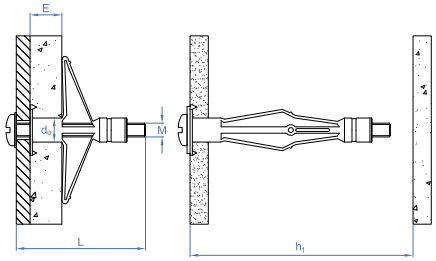

IN-CO With panhead screw

CODE	MXL	DRILL Ø	MINIMUN CAVITY "H"	MIN. SUBSTRATE THICKNESS	MAX. FIXTURE THICKNESS	TENSION LOAD PLASTERBOARD	TENSION LOAD PLASTERBOARD
INCO421	M4 x 30	8	30	1-5	17 -hmin	20	20
INCO432	M4 x 41	8	41	3-10	22 -hmin	20	20

CODE	MXL	DRILL Ø	MINIMUN CAVITY "H"	MIN. SUBSTRATE THICKNESS	MAX. FIXTURE THICKNESS	TENSION LOAD PLASTERBOARD	TENSION LOAD PLASTERBOARD
INCO438	M4 x 47	8	47	9-16	30 -hmin	20	20
INCO446	M4 x 53	8	53	15-22	33 -hmin	20	20
INCO459	M4 x 67	8	67	31-36	52 -hmin	20	20
INCO537	M5 x 46	10	46	5-14	26 -hmin	20	25
INCO552	M5 x 59	10	59	6-18	42 -hmin	20	30
INCO565	M5 x 72	10	72	16-33	55 -hmin	20	30
INCO580	M5 x 89	10	89	33-46	61 -hmin	20	30
INCO637	M6 x 46	12	46	5-13	25 -hmin	15	20
INCO652	M6 x 59	12	59	6-17	38 -hmin	20	25
INCO665	M6 x 72	12	72	14-32	49 -hmin	20	25
INCO680	M6 x 89	12	89	34-46	78 -hmin	20	25

IN-HE

With hexagonal screw

CODE	MXL	DRILL Ø	MINIMUN CAVITY "H"	MIN. SUBSTRATE THICKNESS	MAX. FIXTURE THICKNESS	TENSION LOAD PLASTERBOARD	TENSION LOAD PLASTERBOARD
INHE837	M8 x 45	14	45	5-13	25 -hmin	20	40
INHE855	M8 x 60	14	60	6-18	36 -hmin	20	40
INHE865	M8 x 73	14	73	17-33	47 -hmin	20	40

ANCLA

Nylon plug for hollow bricks and plasterboard

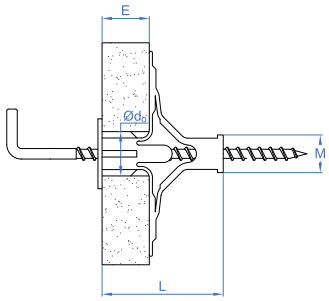

ANCLA

Nylon anchor for use in hollow bricks and plasterboard panel walls

CODE	MXL	DRILL Ø	MIN. SUBSTRATE THICKNESS	TENSION LOAD HOLLOW BRICK	TENSION LOAD PLASTERBOARD
ANCLA40	10 x 40	10	4-12	10	5
ANCLA47	10 x 47	10	15-19	10	5

TAPLA

Plugs for plasterboard

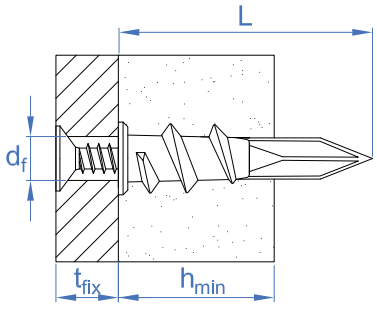

TAPLA NY

Nylon plug

CODE	MXL	MIN. SUBSTRATE THICKNESS	SUITABLE FOR	N° RECESS	TENSION LOAD PLASTERBOARD
TAPLANY	15 x 33	9-16	TPPO 4,5 x 40 / DIN-7981 4,2 x 38	PH3	8

TAPLA ME

Zamak plug with DIN 7981 4,2 x 32

CODE	MXL	MIN. SUBSTRATE THICKNESS	SUITABLE FOR	N° RECESS	TENSION LOAD PLASTERBOARD
TAPLAME	13 x 32	9-16	DIN-7981 4,2 x 32	PH2/PH3	8

TAPLA ZK

Zamak plug

CODE	MXL	MIN. SUBSTRATE THICKNESS	SUITABLE FOR	N° RECESS	TENSION LOAD PLASTERBOARD
TAPLAZK	13 x 37	9-16	TPPO 4,5 x 50 / DIN-7981 4,2 x 38	PZ3	8

AL Screw eyes

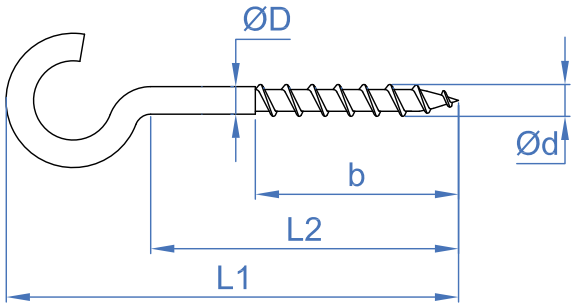

AL-HA Open steel eye bolt

CODE	MXL	Ød	L1	B	L2	ØD
ALHA14025	2,6 x 18 x 7	2,6	18	7	10	2,1
ALHA16030	3,1 x 22 x 9	3,1	22	9	12	2,4
ALHA17040	3,5 x 26 x 10	3,5	26	10	14	2,7
ALHA18040	4,1 x 29 x 10	4,1	29	10	15	3,2
ALHA18050	4,1 x 34 x 12	4,1	34	12	20	3,2
ALHA19050	4,4 x 33 x 12	4,4	33	12	18	3,4
ALHA19060	4,4 x 39 x 15	4,4	39	15	22	3,4
ALHA19070	4,4 x 41 x 15	4,4	41	15	24	3,4
ALHA20050	5 x 35 x 12	5	35	12	19	3,9
ALHA20060	5 x 39 x 12	5	39	12	21	3,9
ALHA20070	5 x 44 x 14	5	44	14	26	3,9
ALHA20080	5 x 50 x 18	5	50	18	30	3,9
ALHA21070	5,6 x 43 x 14	5,6	43	14	23	4,4
ALHA21080	5,6 x 48 x 14	5,6	48	14	28	4,4
ALHA21090	5,6 x 56 x 14	5,6	56	14	32	4,4
ALHA21100	5,6 x 61 x 18	5,6	61	18	37	4,4
ALHA22110	6 x 69 x 24	6	69	24	43	4,7
ALHA22120	6 x 74 x 29	6	74	29	48	4,7
ALHA23130	6,3 x 82 x 35	6,3	82	35	55	5,2

AL-HA B Open steel eye bolt. White lacquered

CODE	MXL	Ød	L1	B	L2	ØD
ALHAB16030	3,1 x 22 x 9	3,1	22	9	12	2,4
ALHAB17040	3,5 x 26 x 10	3,5	26	10	14	2,7
ALHAB18050	4,1 x 34 x 12	4,1	34	12	20	3,2
ALHAB19060	4,4 x 39 x 15	4,4	39	15	22	3,4

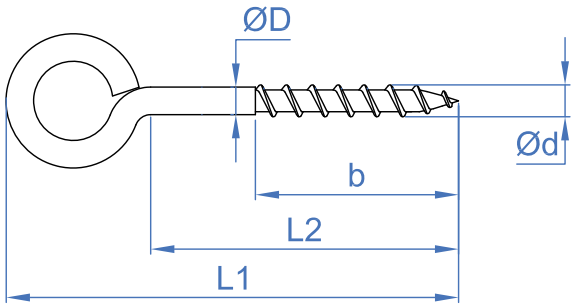

AL-HC Closed steel eye bolt

CODE	MXL	Ød	L1	B	L2	ØD
ALHC14025	2,6 x 18 x 7	2,6	18	7	10	2,1
ALHC16030	3,1 x 22 x 9	3,1	22	9	12	2,4
ALHC17040	3,5 x 28 x 10	3,5	28	10	14	2,7
ALHC18040	4,1 x 30 x 10	4,1	30	10	15	3,2
ALHC18050	3,7 x 39 x 12	4,1	39	12	20	3,2
ALHC19050	4,4 x 35 x 12	4,4	35	12	18	3,4
ALHC19060	4,4 x 42 x 15	4,4	42	15	22	3,4
ALHC19070	4,4 x 44 x 15	4,4	44	15	24	3,4

CODE	MXL	Ød	L1	B	L2	ØD
ALHC20050	5 x 39 x 12	5	39	12	19	3,9
ALHC20060	5 x 41 x 12	5	41	12	21	3,9
ALHC20070	5 x 48 x 14	5	48	14	26	3,9
ALHC20080	5 x 54 x 18	5	54	18	30	3,9
ALHC21070	5,6 x 49 x 14	5,6	49	14	23	4,4
ALHC21080	5,6 x 54 x 14	5,6	54	14	28	4,4
ALHC21090	5,6 x 61 x 14	5,6	61	14	32	4,4
ALHC21100	5,6 x 66 x 18	5,6	66	18	37	4,4
ALHC22110	6 x 73 x 24	6	73	24	43	4,7
ALHC22120	6 x 81 x 29	6	81	29	48	4,7
ALHC23130	6,3 x 89 x 35	6,3	89	35	55	5,2

AL-HC B

Closed steel eye bolt. White lacquered

CODE	MXL	Ød	L1	B	L2	ØD
ALHCB16030	3,1 x 22 x 9	3,1	22	9	12	2,4
ALHCB17040	3,5 x 28 x 10	3,5	28	10	14	2,7
ALHCB18050	3,7 x 39 x 12	3,7	39	12	20	3,2
ALHCB19060	4,4 x 42 x 15	4,4	42	15	22	3,4

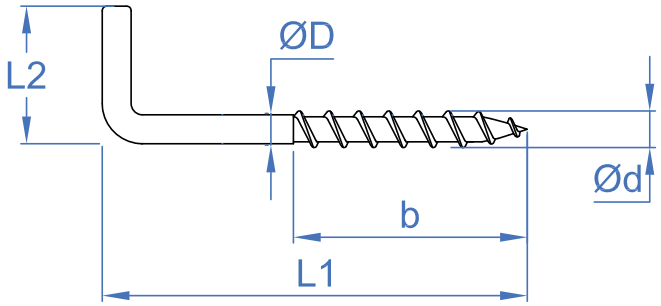

AL-RO

Threaded hook screw

CODE	MXL	Ød	L1	L2	B	ØD
ALRO14025	2,6 x 17 x10	2,6	17	10	10	2
ALRO16030	3,1 x 20 x 10	3,1	20	10	12	2,4
ALRO17040	3,5 x 29 x 13	3,5	29	13	17	2,7
ALRO18040	3,7 x 28 x 14	3,7	28	14	17	2,9
ALRO18050	3,7 x 37 x 15	3,7	37	15	22	2,9
ALRO19050	4,4 x 37 x 15	4,4	37	15	22	3,4
ALRO19060	4,4 x 46 x 17	4,4	46	17	28	3,4
ALRO19070	4,4 x 55 x 18	4,4	55	18	33	3,4
ALRO20060	5 x 44 x 20	5	44	20	26	3,9
ALRO20070	5 x 53 x 20	5	53	20	32	3,9
ALRO20080	5 x 63 x 21	5	63	21	38	3,9
ALRO21080	5,6 x 60 x 22	5,6	60	22	36	4,4
ALRO21090	5,6 x 70 x 22	5,6	70	22	42	4,4
ALRO22100	6 x 79 x 23	6	79	23	47	4,7
ALRO22110	6 x 86 x 23	6	86	23	52	4,7
ALRO22120	6 x 97 x 25	6	97	25	58	4,7
ALRO23130	7,8 x 105 x 25	7,8	105	25	63	5,8

AL-RO B

Threaded hook screw. White lacquered

CODE	MXL	Ød	L1	L2	B	ØD
ALROB16030	3,1 x 20 x 10	3,1	20	10	10	2,4
ALROB17040	3,5 x 29 x 13	3,5	29	13	13	2,7
ALROB18050	3,7 x 37 x 15	3,7	37	15	18	2,9
ALROB19060	4,4 x 46 x 17	4,4	46	17	24	3,4

Self-drilling installation parameters

			ø 3.5	ø 3.9	ø 4.2	ø 4.8	ø 5.5	ø 6.3
Maximum installation force		N	150	200	250	250	350	350
Drilling speed	Steel	rpm	1.800 - 2500				1000 - 1800	
	Stainless steel	rpm	1.000 - 1500				600 - 1000	
Maximum torque		Nm	2.8	3.8	4.7	6.9	10.4	16.9

142 DIN-7504-K

144 AUTO

145 DIN-7504-K RE

150 DIN-7504-N

153 DIN-7504-P

156 TAE

154 ABA

148 FIBR

147 PS

155 BCP


Self tapping pilot hole diameter

Size	Sheet thickness	Ø Hole diameter Aluminium	Ø Hole diameter Steel
2,9 N°4	0,4 - 0,6	2,20	2,25
	0,6 - 1,0	2,20	2,40
	1,0 - 1,5	2,25	2,40
	1,5 - 2,5	2,40	2,50
	2,5 - 4,0	-	-
3,5 N°6	0,4 - 0,6	2,70	2,70
	0,6 - 1,0	2,70	2,80
	1,0 - 1,5	2,80	2,80
	1,5 - 2,5	2,80	2,90
	2,5 - 4,0	-	3,00
3,9 N°7	0,4 - 0,6	-	-
	0,6 - 1,0	3,00	3,10
	1,0 - 1,5	3,00	3,10
	1,5 - 2,5	3,10	3,20
	2,5 - 4,0	3,10	3,30
4,2 N°8	0,4 - 0,6	-	-
	0,6 - 1,0	3,20	3,30
	1,0 - 1,5	3,20	3,30
	1,5 - 2,5	3,30	3,40
	2,5 - 4,0	3,30	3,50
4,8 N°10	0,4 - 0,6	-	-
	0,6 - 1,0	3,70	3,80
	1,0 - 1,5	3,70	3,80
	1,5 - 2,5	3,80	3,90
	2,5 - 4,0	3,80	4,00
5,5 N°12	0,4 - 0,6	-	-
	0,6 - 1,0	4,30	4,40
	1,0 - 1,5	4,30	4,40
	1,5 - 2,5	4,40	4,50
	2,5 - 4,0	4,40	4,60
6,3 N°14	0,4 - 0,6	-	-
	0,6 - 1,0	5,00	5,10
	1,0 - 1,5	5,00	5,10
	1,5 - 2,5	5,10	5,20
	2,5 - 4,0	5,10	5,30

159 CP

146 AUE

156 DIN-7981

158 DIN-7982


Self-drilling screw selection

PRODUCT	Ø	THICKNESS TO BE DRILLED IN STEEL [mm]
AUTO	5,5	4,0 – 12,0
ABE ABR ABP RS	6,3	2,5 – 6,0
	5,5	1,75 – 5,25
	4,8	1,75 – 4,4
	4,2	1,75 – 3,0
	3,9	0,7 – 2,4
	3,5	0,7 – 2,25
ABA / ATA	6,3	2,5 – 6,0
	5,5	1,75 – 5,0
	4,8	1,75 – 4,0
TAE	4,2	0,75 – 2,5
BCP	4,2	0,7 – 2,0
ARE	6,3	1,0 – 1,5
	5,5	1,0 – 1,5
	4,8	0,3 – 1,0
PS PSL	5,5	1,5 – 6,0
	5,5	6,0 – 12,0

0,00 0,25 0,50 0,75 1,00 1,25 1,50 1,75 2,00 2,25 2,50 2,75 3,00 3,25 3,50 3,75 4,00 4,25 4,50 4,75 5,00 5,25 5,50 5,75 6,00 6,5 7,0 7,5 8,0 8,5 9,0 9,5 10,0 10,5 11,0 11,5 12,0

PRODUCT	Ø	THICKNESS TO BE DRILLED IN ALUMINUM [mm]
BIE	4,8	1,75 – 4,4
	5,5	1,75 – 5,25
	6,3	2,5 – 6,0
BAUTO	5,5	4,0 – 12,0

0,00 0,25 0,50 0,75 1,00 1,25 1,50 1,75 2,00 2,25 2,50 2,75 3,00 3,25 3,50 3,75 4,00 4,25 4,50 4,75 5,00 5,25 5,50 5,75 6,00 6,5 7,0 7,5 8,0 8,5 9,0 9,5 10,0 10,5 11,0 11,5 12,0

Maximum fixture thickness

LENGTH	ST 3,5	ST 3,9	ST 4,2	ST 4,8	ST 5,5	ST 6,3
9,5	2,85					
11	4,2					
13	6,2	5,8	4,3	3,7		
16	9,2	8,8	7,3	5,5		
19	12,1	11,7	10,3	8,7	8,7	7
22	15,1	14,7	13,3	11,7	11,7	10
25	18,1	17,7	16,3	14,7	14,7	13
32	25,1	24,5	23	21,5	21,5	20
38		30,5	29	27,5	27,5	26
45			36	34,5	34,5	33
50			41	39,5	39,5	38
60				49,5	49,5	48
63				52,5	52,5	51
73				62,5	62,5	61
75				64,5	64,5	63
80				69,5		68
90				79,5		78
100				89,5		88
110						98
120						108
130						118
140						128

* Not suitable for AUTO screw

AB-IA / AB-RA Reinforced pipe clamp M8 opened

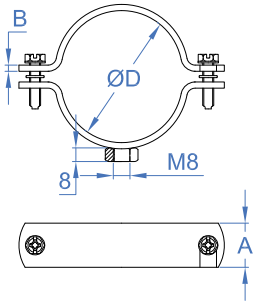

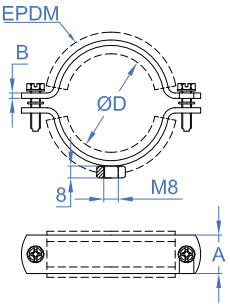

AB-RA / AB-IA Reinforced pipe clamp M8 opened

CODE	ØD(MM)	ØD(")	A X B	MAXIMUN LOAD
ABIA015 / ABRA015	12-16	1/4"	20 x 1,5	80
ABIA018 / ABRA018	15 - 19	3/8"	20 x 1,5	80
ABIA022 / ABRA022	20 - 25	1/2"	20 x 1,5	80
ABIA028 / ABRA028	26 - 30	3/4"	20 x 1,5	80
ABIA035 / ABRA035	32 - 36	1"	20 x 1,5	80
ABIA042 / ABRA042	38 - 43	1 1/4"	20 x 1,5	80
ABIA048 / ABRA048	47 - 51	1 1/2"	20 x 1,5	80
ABIA054 / ABRA054	53 - 58	-	20 x 1,5	80
ABIA060 / ABRA060	60 - 64	2"	20 x 1,5	80
ABIA075 / ABRA075	75 - 80	2 1/2"	20 x 1,5	80
ABIA090 / ABRA090	87 - 92	3"	20 x 1,5	80
ABIA100 / ABRA100	99 - 105	3 1/2"	20 x 1,5	80
ABIA110 / ABRA110	107 - 112	-	20 x 1,5	80
ABIA115 / ABRA115	113 - 118	4"	20 x 1,5	80
ABIA125 / ABRA125	125 - 130	4 1/2"	20 x 1,5	80

AB-IR Isophonic pipe clamp M8 fast-clip

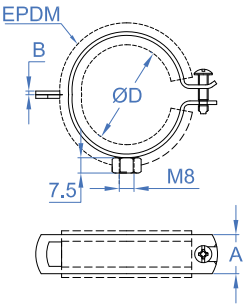

AB-IR Isophonic pipe clamp M8 fast-clip

CODE	ØD(MM)	ØD(")	A X B	MAXIMUN LOAD
ABIR015	14 - 15	1/4"	19 x 1,25	60
ABIR018	16 - 19	3/8"	19 x 1,25	60
ABIR022	21 - 23	1/2"	19 x 1,25	60
ABIR028	26 - 28	3/4"	19 x 1,25	60
ABIR035	32 - 35	1"	19 x 1,25	60
ABIR040	40 - 43	1 1/4"	19 x 1,25	60
ABIR048	48 - 51	1 1/2"	19 x 1,25	60
ABIR054	52 - 56	-	19 x 1,25	60
ABIR060	57 - 60	2"	19 x 1,25	60

AB-RI / AB-RE Reinforced isophonic pipe clamp M8 + M10

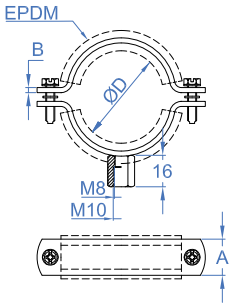

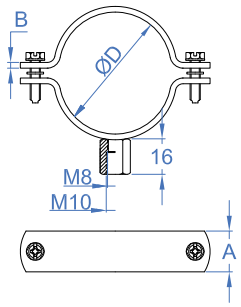

AB-RI / AB-RE Zinc-plated

CODE	ØD(MM)	ØD(")	A X B	MAXIMUN LOAD
ABRI018 / ABRE018	15 - 19	3/8"	19 x 1,8	150
ABRI022 / ABRE022	20 - 25	1/2"	19 x 1,8	150
ABRI028 / ABRE028	26 - 30	3/4"	19 x 1,8	150
ABRI035 / ABRE035	32 - 36	1"	19 x 1,8	150
ABRI040 / ABRE040	38 - 43	1 1/4"	19 x 1,8	150
ABRI048 / ABRE048	47 - 51	1 1/2"	19 x 1,8	150
ABRI054 / ABRE054	53 - 56	-	19 x 1,8	150
ABRI060 / ABRE060	60 - 64	2"	19 x 1,8	150
ABRI070 / ABRE070	68 - 72	-	19 x 1,8	150
ABRI075 / ABRE075	75 - 80	2 1/2"	19 x 1,8	150
ABRI083 / ABRE083	81 - 86	-	19 x 1,8	150
ABRI090 / ABRE090	87 - 92	3"	19 x 1,8	150
ABRI100 / ABRE100	99 - 105	3 1/2"	19 x 1,8	150
ABRI110 / ABRE110	107 - 112	-	19 x 2,3	200
ABRI115 / ABRE115	113 - 118	4"	19 x 2,3	200
ABRI125 / ABRE125	125 - 130	4 1/2"	19 x 2,3	200
ABRI133 / ABRE133	132 - 137	-	19 x 2,3	200
ABRI140 / ABRE140	138 - 142	5"	19 x 2,3	200
ABRI150 / ABRE150	148 - 152	-	19 x 2,3	200
ABRI160 / ABRE160	159 - 166	6"	19 x 2,3	200
ABRI180 / ABRE180	179 - 184	-	19 x 2,3	200
ABRI200 / ABRE200	199 - 212	-	19 x 2,3	200
ABRI220 / ABRE220	215 - 226	8"	19 x 2,3	200
ABRI250 / ABRE250	245 - 254	-	19 x 2,3	200
ABRI280 / ABRE280	278 - 284	-	19 x 2,3	200
ABRI300 / ABRE300	299 - 304	-	19 x 2,3	200
ABRI315 / ABRE315	314 - 319	-	19 x 2,3	200
ABRI355 / ABRE355	354 - 359	-	19 x 2,3	200

AB-RI V / AB-RE V Zinc-plated

CODE	ØD(MM)	ØD(")	A X B	MAXIMUN LOAD
ABRI250 / ABRE250	245 - 254	-	19 x 2,3	200
ABRI280 / ABRE280	278 - 284	-	19 x 2,3	200
ABRI300 / ABRE300	299 - 304	-	19 x 2,3	200
ABRI315 / ABRE315	314 - 319	-	19 x 2,3	200
ABRI355 / ABRE355	354 - 359	-	19 x 2,3	200
ABRI400 / ABRE400	399 - 404	-	19 x 2,3	200
ABRI450 / ABRE450	449 - 454	-	19 x 2,3	200
ABRI500 / ABRE500	499 - 504	-	19 x 2,3	200
ABRI560 / ABRE560	555 - 561	-	19 x 2,3	200
ABRI600 / ABRE600	599 - 604	-	19 x 2,3	200
ABRI630 / ABRE630	625 - 631	-	19 x 2,3	200
ABRI710 / ABRE710	705 - 711	-	19 x 2,3	200
ABRI800 / ABRE800	799 - 804	-	19 x 2,3	200
ABRI900 / ABRE900	899 - 904	-	19 x 2,3	200
ABRI910 / ABRE910	999 - 1.004	-	19 x 2,3	200
ABRI911 / ABRE911	1.115 - 1.121	-	19 x 2,3	200
ABRI912 / ABRE912	1.245 - 1.251	-	19 x 2,3	200

AB-RI A2 / AB-RI A4 Reinforced isophonic pipe clamp M8 + M10

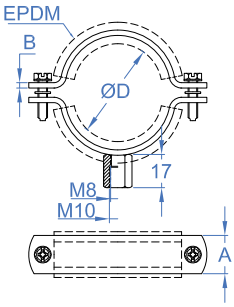

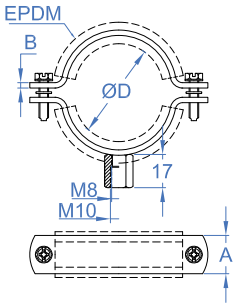

AB-RI A2 / AB-RI A4 A2 Stainless steel

CODE	ØD(MM)	ØD(")	A X B	MAXIMUN LOAD
ABRIA2018 / ABRIA4018	15 - 18	3/8"	19 x 1,8	150
ABRIA2022 / ABRIA4022	20 - 24	1/2"	19 x 1,8	150
ABRIA2028 / ABRIA4028	26 - 30	3/4"	19 x 1,8	150
ABRIA2035 / ABRIA4035	32 - 36	1"	19 x 1,8	150
ABRIA2040 / ABRIA4040	36 - 42	1 1/4"	19 x 1,8	150
ABRIA2048 / ABRIA4048	47 - 50	1 1/2"	19 x 1,8	150
ABRIA2054 / ABRIA4054	51 - 55	-	19 x 1,8	150
ABRIA2060 / ABRIA4060	60 - 64	2"	19 x 1,8	150
ABRIA2075 / ABRIA4075	75 - 80	2 1/2"	19 x 1,8	150
ABRIA2090 / ABRIA4090	87 - 92	3"	19 x 1,8	150
ABRIA2110 / ABRIA4110	106 - 112	-	19 x 1,8	150
ABRIA2115 / ABRIA4115	114 - 119	4"	19 x 1,8	150
ABRIA2125 / ABRIA4125	124 - 131	4 1/2"	19 x 1,8	150
ABRIA2140 / ABRIA4140	133 - 140	5"	19 x 1,8	150
ABRIA2160 / ABRIA4160	159 - 163	6"	19 x 1,8	150

AB-RE A2 / AB-RE A4 Reinforced pipe clamp M8 + M10

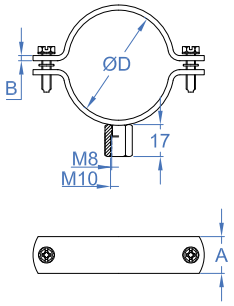

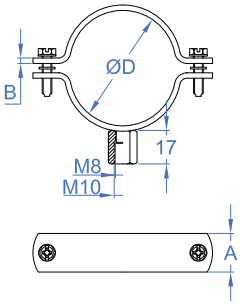

AB-RE A2 / AB-RE A4 A2 Stainless steel

CODE	ØD(MM)	ØD(")	A X B	MAXIMUN LOAD
ABREA2018 / ABREA4018	15 - 18	3/8"	19 x 1,8	150
ABREA2022 / ABREA4022	20 - 24	1/2"	19 x 1,8	150
ABREA2028 / ABREA4028	26 - 30	3/4"	19 x 1,8	150
ABREA2035 / ABREA4035	32 - 36	1"	19 x 1,8	150
ABREA2040 / ABREA4040	36 - 42	1 1/4"	19 x 1,8	150
ABREA2048 / ABREA4048	47 - 50	1 1/2"	19 x 1,8	150
ABREA2054 / ABREA4054	51 - 55	-	19 x 1,8	150
ABREA2060 / ABREA4060	60 - 64	2"	19 x 1,8	150
ABREA2075 / ABREA4075	75 - 80	2 1/2"	19 x 1,8	150
ABREA2090 / ABREA4090	87 - 92	3"	19 x 1,8	150
ABREA2110 / ABREA4110	106 - 112	-	19 x 1,8	150
ABREA2115 / ABREA4115	114 - 119	4"	19 x 1,8	150
ABREA2125 / ABREA4125	124 - 131	4 1/2"	19 x 1,8	150
ABREA2140 / ABREA4140	133 - 140	5"	19 x 1,8	150
ABREA2160 / ABREA4160	159 - 163	6"	19 x 1,8	150
ABREA2200 / ABREA4200	199 - 212	-	19 x 1,8	150

AB-GA Pipe clamp for gas M8 + M10 yellow coated

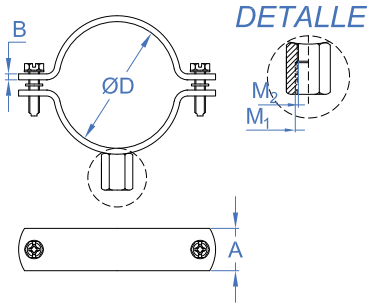

AB-GA Yellow coated pipe clamp for gas M8 + M10

CODE	ØD(MM)	ØD(")	A X B	METRIC	MAXIMUN LOAD
ABGA018	15 - 18	3/8"	20 x 2	M8	200
ABGA022	20 - 24	1/2"	20 x 2	M8	200
ABGA028	26 - 30	3/4"	20 x 2	M8	200
ABGA035	32 - 36	1"	20 x 2	M8	200
ABGA040	38 - 42	1 1/4"	20 x 2	M8	200
ABGA048	47 - 50	1 1/2"	20 x 2	M8	200
ABGA054	52 - 56	-	20 x 2	M8	200
ABGA060	60 - 64	2"	20 x 2	M8/M10	200
ABGA075	75 - 80	2 1/2"	20 x 2	M8/M10	200
ABGA090	85 - 90	3"	20 x 2	M8/M10	200
ABGA100	99 - 105	3 1/2"	20 x 2	M8/M10	200
ABGA110	107 - 112	-	20 x 2	M8/M10	200
ABGA115	113 - 118	4"	20 x 2	M8/M10	200
ABGA140	138 - 142	5"	20 x 2	M8/M10	200
ABGA160	159 - 166	6"	20 x 2	M8/M10	200

AB-M8 Drainpipe clamp M8

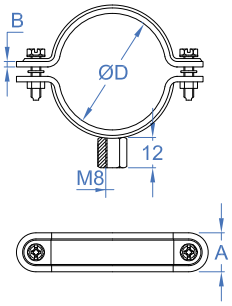

AB-M8 Drainpipe clamp M8

CODE	ØD(MM)	ØD(")	A X B	MAXIMUN LOAD
ABM8050	49 - 54	-	28 x 0,8	100
ABM8063	60 - 65	-	28 x 0,8	100
ABM8075	75 - 80	-	28 x 0,8	100
ABM8090	88 - 92	-	28 x 0,8	100
ABM8110	108 - 113	-	28 x 0,8	100
ABM8125	124 - 130	-	28 x 0,8	100
ABM8160	159 - 165	-	28 x 0,8	100
ABM8200	199 - 203	-	28 x 0,8	100
ABM8250	249 - 254	-	28 x 0,8	100
ABM8315	314 - 319	-	28 x 0,8	100

AB-DE Z / AB-DE G Recessed drainpipe clamp

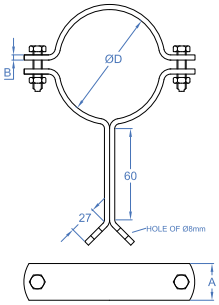

AB-DE Z / AB-DE G Zinc-plated

CODE	ØD(MM)	ØD(")	A X B	MAXIMUN LOAD
ABDE075	75 - 80	2 1/2"	20 x 2,5	200
ABDE090	87 - 92	3"	20 x 2,5	200
ABDE110	107 - 112	-	20 x 2,5	200
ABDE125	125 - 130	4 1/2"	20 x 2,5	200
ABDE160	159 - 166	6"	20 x 2,5	200
ABDE200	199 - 212	-	20 x 2,5	200
ABDE250	245 - 254	-	20 x 2,5	200
ABDE315	314 - 319	-	20 x 2,5	200

AB-DP Z / AB-DP G Drainpipe clamp with hole

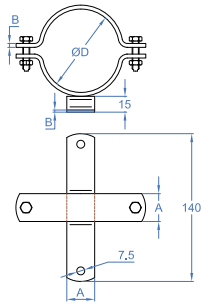

AB-DP Z / AB-DP G Zinc-plated

CODE	ØD(MM)	ØD(")	A X B	MAXIMUN LOAD
ABDP075	75 - 80	2 1/2"	20 x 2	200
ABDP090	87 - 92	3"	20 x 2	200
ABDP110	107 - 112	-	20 x 2	200
ABDP125	125 - 130	4 1/2"	20 x 2	200
ABDP160	159 - 166	6"	20 x 2	200
ABDP200	199 - 212	-	20 x 2	200
ABDP250	245 - 254	-	20 x 2	200

AB-ZI U-bolt

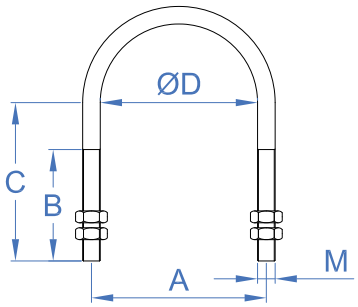

AB-ZI Zinc-plated

CODE	ØD(")	METRIC	A X B X C	MAXIMUN LOAD
AZIM060250	1/4"	M6	20 / 14 / 20	250
AZIM060375	3/8"	M6	23,5 / 15 / 23	250
AZIM060500	1/2"	M6	27,5 / 17 / 25	250
AZIM060750	3/4"	M6	33 / 19 / 31	250
AZIM061000	1"	M6	39,5 / 24 / 39	250
AZIM061250	1 1/4"	M6	48,5 / 24 / 44	250
AZIM081500	1 1/2"	M8	56,5 / 26 / 48	350
AZIM082000	2"	M8	68,5 / 26 / 53	350
AZIM082250	2 1/4"	M8	83 / 35 / 63	350
AZIM082500	2 1/2"	M8	83 / 35 / 71	350
AZIM083000	3"	M8	99 / 35 / 76	350
AZIM083500	3 1/2"	M8	112 / 35 / 82	350
AZIM084000	4"	M8	125 / 35 / 87	350
AZIM084500	4 1/2"	M8	140 / 40 / 100	350
AZIM085000	5"	M8	152 / 40 / 105	350
AZIM086000	6"	M8	179 / 40 / 118	350
AZIM103000	3"	M10	100 / 45 / 66	350
AZIM103500	3 1/2'	M10	110 / 50 / 94	350
AZIM104000	4'	M10	125 / 55 / 97,5	350
AZIM105000	5'	M10	150 / 55 / 108	350
AZIM106000	6'	M10	170 / 55 / 125	350
AZIM108000	8'	M10	230 / 55 / 148	350

AB-SA U-bolt support

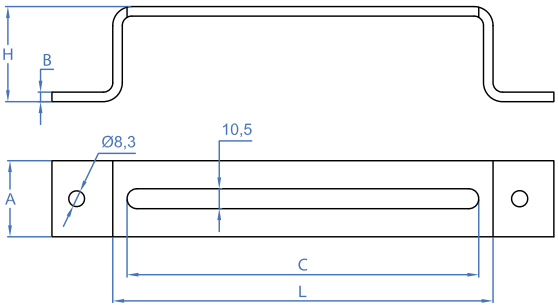

AB-SA U-bolt support

CODE	L	H	A X B	C
ABSA050100	100	50	40 x 5	85
ABSA050125	125	50	40 x 5	110
ABSA050200	200	50	40 x 5	185
ABSA050300	300	50	40 x 5	285
ABSA050400	400	50	40 x 5	385
ABSA050500	500	50	40 x 5	485
ABSA050600	600	50	40 x 5	585
ABSA100100	100	100	40 x 5	85
ABSA100125	125	100	40 x 5	110
ABSA100200	200	100	40 x 5	185
ABSA100300	300	100	40 x 5	285
ABSA100400	400	100	40 x 5	385
ABSA100500	500	100	40 x 6	485

AB-GP

Heayv duty pipe clamp

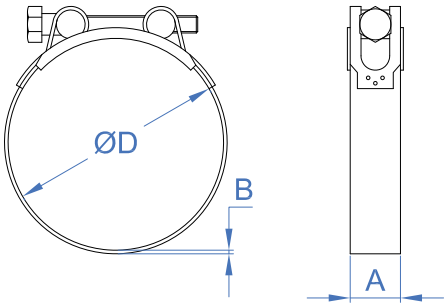

AB-GP High pressure clamp

CODE	M X L	ØD(MM)	A X B
AGP023025	M5 x 35	23 - 25	18 X 0,6
AGP026028	M5 x 35	26 - 28	18 X 0,6
AGP029031	M5 x 35	29 - 31	18 X 0,6
AGP032035	M6 x 50	32 - 35	20 X 1
AGP036039	M6 x 50	36 - 39	20 X 1
AGP040043	M6 x 50	40 - 43	20 X 1
AGP044047	M6 x 50	44 - 47	20 X 1
AGP048051	M6 x 50	48 - 51	20 X 1
AGP052055	M6 x 50	52 - 55	20 X 1
AGP056059	M6 x 55	56 - 59	20 X 1
AGP060063	M6 x 55	60 - 63	20 X 1
AGP064067	M8 x 70	64 - 67	25 X 1,5
AGP068073	M8 x 70	68 - 73	25 X 1,5
AGP074079	M8 x 70	74 - 79	25 X 1,5
AGP080085	M8 x 70	80 - 85	25 X 1,5
AGP086091	M8 x 70	86 - 91	25 X 1,5
AGP092097	M8 x 70	92 - 97	25 X 1,5
AGP098103	M8 x 70	98 - 103	25 X 1,5
AGP104112	M8 x 80	104 - 112	25 X 1,5
AGP113121	M8 x 80	113 - 121	25 X 1,5
AGP122130	M8 x 80	122 - 130	25 X 1,5
AGP131139	M8 x 80	131 - 139	25 X 1,5
AGP140148	M8 x 80	140 - 148	25 X 1,5
AGP149161	M8 x 80	149 - 161	25 X 1,8
AGP162174	M8 x 80	162 - 174	25 X 1,8
AGP175187	M10 x 110	175-187	25 X 1,8
AGP188200	M10 x 110	188-200	25 X 1,8
AGP201213	M10 x 110	201-213	25 X 1,8
AGP214226	M10 x 110	214-226	25 X 1,8

AB-M6

Pipe clamp M6

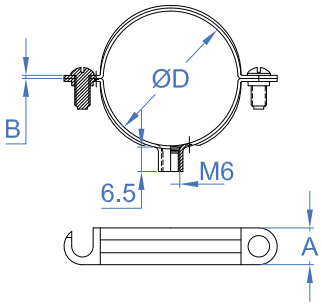

AB-M6 Z / AB-M6 Zinc-plated

CODE	ØD(MM)	ØD(")	A X B	MAXIMUN LOAD
ABM6008 / ABMZ6008	8	-	10 x 1	70
ABM6010 / ABMZ6010	10	1/8"	10 x 1	70
ABM6012 / ABMZ6012	12	-	10 x 1	70
ABM6014 / ABMZ6014	14	1/4"	10 x 1	70
ABM6015 / ABMZ6015	15	-	10 x 1	70
ABM6016 / ABMZ6016	16	-	10 x 1	70

CODE	ØD(MM)	ØD(")	A X B	MAXIMUN LOAD
ABM6018 / ABMZ6018	18	3/8"	10 x 1	70
ABM6020 / ABMZ6020	20	-	10 x 1	70
ABM6022 / ABMZ6022	22	1/2"	10 x 1	70
ABM6025 / ABMZ6025	25	-	10 x 1	70
ABM6026 / ABMZ6026	26	3/4"	10 x 1	70
ABM6028 / ABMZ6028	28	-	10 x 1	70
ABM6032 / ABMZ6032	32	1"	10 x 1	70
ABM6035 / ABMZ6035	35	-	12 x 1,2	70
ABM6037 / ABMZ6037	37	-	12 x 1,2	100
ABM6040 / ABMZ6040	40	-	12 x 1,2	100
ABM6042 / ABMZ6042	42	1 1/4"	12 x 1,2	100
ABM6047 / ABMZ6047	47	1 1/2"	12 x 1,2	100
ABM6050 / ABMZ6050	50	-	12 x 1,2	100
ABM6054 / ABMZ6054	54	-	12 x 1,2	100
ABM6060 / ABMZ6060	60	2"	12 x 1,2	100
ABM6063 / ABMZ6063	63	-	12 x 1,2	100

AB-D6 Double pipe clamp M6

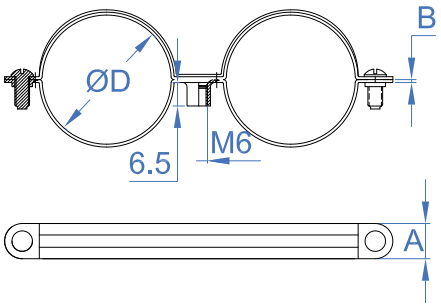

AB-D6 Z / AB-D6 Zinc-plated

CODE	ØD(MM)	ØD(")	A X B	MAXIMUN LOAD
ABD6012 / ABDZ6012	12	1/8"	12 x 1	100
ABD6015 / ABDZ6015	15	1/4"	12 x 1,2	100
ABD6018 / ABDZ6018	18	3/8"	12 x 1,2	100
ABD6022 / ABDZ6022	22	1/2"	12 x 1,2	100
ABD6028 / ABDZ6028	28	3/4"	12 x 1,2	100

AB-M6 A2 Pipe clamp M6

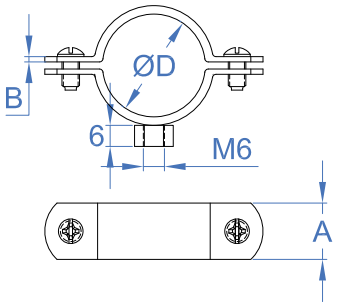

AB-M6 A2 A2 Stainless steel

CODE	ØD(MM)	ØD(")	A X B	MAXIMUN LOAD
ABM6A2012	12	1/4"	16 x 1,5	70
ABM6A2015	14 - 15	-	16 x 1,5	70
ABM6A2018	16 - 18	3/8"	16 x 1,5	70
ABM6A2020	19 - 21	1/2"	16 x 1,5	70
ABM6A2022	22 -24	-	16 x 1,5	70
ABM6A2028	25 - 30	3/4"	16 x 1,5	70

AB-6I

Isophonic pipe clamp M6

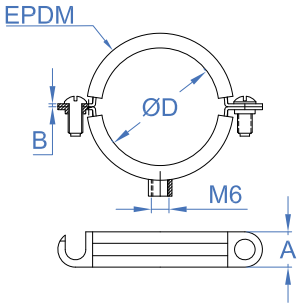

AB-6I

Isophonic pipe clamp M6

CODE	ØD(MM)	ØD(")	A X B	MAXIMUN LOAD
AB6I012	12	1/8"	15 x 1,2	70
AB6I015	15	1/4"	15 x 1,2	70
AB6I016	16	-	15 x 1,2	70
AB6I018	18	3/8"	15 x 1,2	70
AB6I022	22	1/2"	15 x 1,2	70
AB6I026	26	-	15 x 1,2	70
AB6I028	28	3/4"	15 x 1,2	70
AB6I032	32	-	15 x 1,2	70
AB6I035	35	1"	15 x 1,2	70
AB6I042	42	1 1/4"	15 x 1,2	100
AB6I048	48	1 1/2"	15 x 1,2	100
AB6I054	54	-	15 x 1,2	100
AB6I060	60	2"	15 x 1,2	100

AB-DI

Double isophonic pipe clamp M6

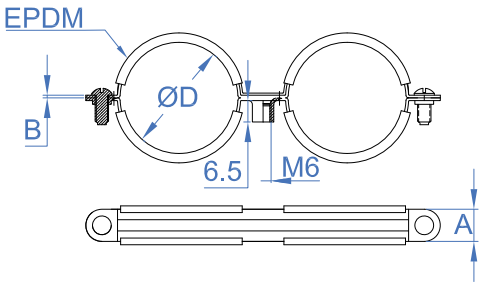

AB-DI

Double isophonic pipe clamp M6

CODE	ØD(MM)	ØD(")	A X B	MAXIMUN LOAD
ABDI0012	12	1/8"	15 x 1	100
ABDI0015	15	1/4"	15 x 1,2	100
ABDI0018	18	3/8"	15 x 1,2	100
ABDI0022	22	1/2"	15 x 1,2	100
ABDI0028	28	3/4"	15 x 1,2	100

AB-M7 Pipe clamp M6

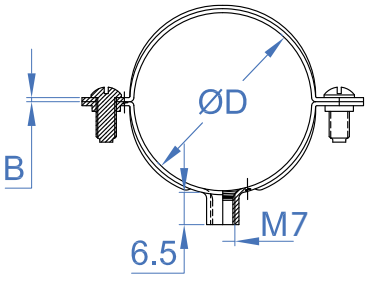

AB-M7 Zinc-plated

CODE	ØD(MM)	ØD(")	A X B	MAXIMUN LOAD
ABMZ7008	8	-	11 X 1	-
ABMZ7010	10	1/8"	11 X 1	-
ABMZ7012	12	-	11 X 1	-
ABMZ7014	14	1/4"	11 X 1	-
ABMZ7016	16	-	11 X 1	-
ABMZ7018	18	3/8"	11 X 1	-
ABMZ7020	20	-	11 X 1	-
ABMZ7022	22	1/2"	11 X 1	-
ABMZ7024	24	-	11 X 1	-
ABMZ7025	25	-	11 X 1	-
ABMZ7026	26	3/4"	11 X 1	-
ABMZ7028	28	-	11 X 1	-
ABMZ7032	32	1"	11 X 1	-
ABMZ7034	34	-	11 X 1	-
ABMZ7036	36	-	11 X 1	-
ABMZ7038	38	-	11 X 1	-
ABMZ7040	40	-	11 X 1	-
ABMZ7050	50	-	11 X 1	-
ABMZ7063	63	-	12 X 1,2	-

AB-D7 Double pipe clamp M6

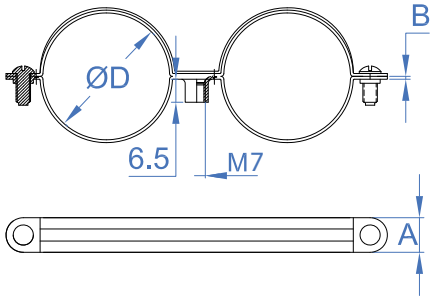

AB-D7 Zinc-plated

CODE	ØD(MM)	ØD(")	A X B	MAXIMUN LOAD
ABDZ70810	8-10	-	11 X 1	-
ABDZ71012	10-12	1/8"	11 X 1	-
ABDZ71214	12-14	-	11 X 1	-
ABDZ71416	14-16	-	11 X 1	-
ABDZ71618	16-18	3/8"	11 X 1	-
ABDZ71820	18-20	-	11 X 1	-
ABDZ72022	20-22	1/2"	11 X 1	-
ABDZ72224	22-24	-	11 X 1	-
ABDZ72628	26-28	3/4"	11 X 1	-

AB-7I

Isophonic pipe clamp M6

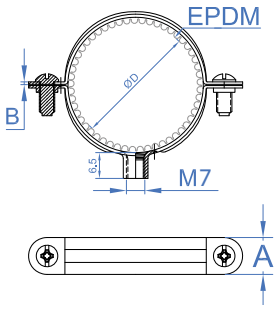

AB-7I

Isophonic pipe clamp M6

CODE	ØD(MM)	ØD(")	A X B	MAXIMUN LOAD
AB7IZ010	10	-	11 X 1	-
AB7IZ012	12	-	11 X 1	-
AB7IZ014	14	-	11 X 1	-
AB7IZ016	16	-	11 X 1	-
AB7IZ018	18	-	11 X 1	-
AB7IZ020	20	-	11 X 1	-
AB7IZ022	22	-	11 X 1	-
AB7IZ024	24	-	11 X 1	-
AB7IZ026	26	-	11 X 1	-
AB7IZ028	28	-	11 X 1	-
AB7IZ032	32	-	11 X 1	-
AB7IZ034	34	-	11 X 1	-
AB7IZ036	36	-	12 X 1	-
AB7IZ038	38	-	12 X 1	-
AB7IZ040	40	-	12 X 1	-
AB7IZ050	50	-	12 X 1,2	-

AB-7ID

Double isophonic pipe clamp M6

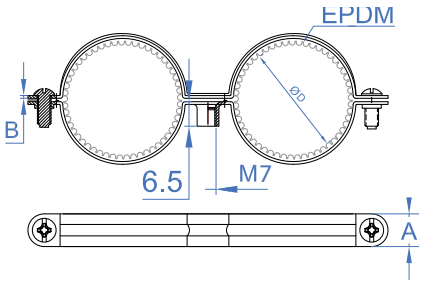

AB-7ID

Double isophonic pipe clamp M6

CODE	ØD(MM)	ØD(")	A X B	MAXIMUN LOAD
AB7IDZ0810	08-10	1/8"	11 X 1	-
AB7IDZ1012	10-12	1/8"	11 X 1	-
AB7IDZ1214	12-14	1/4"	11 X 1	-
AB7IDZ1416	14-16	1/4"	11 X 1	-
AB7IDZ1618	16-18	3/8"	11 X 1	-
AB7IDZ1820	18-20	3/8"	11 X 1	-
AB7IDZ2022	20-22	1/2"	11 X 1	-
AB7IDZ2224	22-24	1/2"	11 X 1	-
AB7IDZ2628	26-28	3/4"	11 X 1	-

AB-PI

Conduit clip with single hole

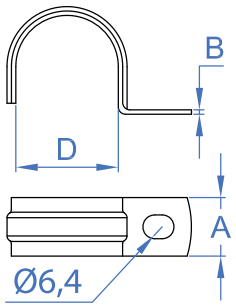

AB-PI

Conduit clip, with single hole

CODE	ØD(MM)	ØD(")	A X B	MAXIMUN LOAD
ABPI006	6	-	12 x 1	30
ABPI008	8	-	12 x 1	30
ABPI010	10	1/8"	12 x 1	30
ABPI012	12	-	12 x 1	30
ABPI014	14	1/4"	15 x 1	30
ABPI016	16	-	15 x 1	30
ABPI018	18	3/8"	15 x 1	30
ABPI020	20	-	15 x 1	30
ABPI022	22	1/2"	15 x 1,2	30
ABPI025	25	-	15 x 1,2	30
ABPI026	26	3/4"	15 x 1,2	30
ABPI028	28	-	15 x 1,2	30
ABPI032	32	1"	15 x 1,2	30
ABPI040	40	-	15 x 1,2	30
ABPI042	42	1 1/4"	15 x 1,2	30
ABPI047	47	1 1/2"	15 x 1,2	30
ABPI050	50	-	15 x 1,2	30
ABPI063	63	2"	15 x 1,2	30

AB-PU

Bridge conduit clip with double hole

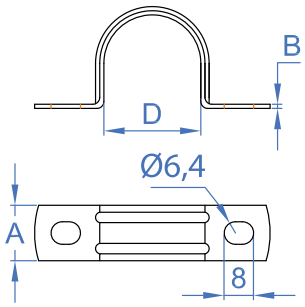

AB-PU

Bridge conduit clip, with double hole

CODE	ØD(MM)	ØD(")	A X B	MAXIMUN LOAD
ABPU016	16	-	12 x 1,2	75
ABPU018	18	3/8"	12 x 1,2	75
ABPU020	20	-	12 x 1,2	75
ABPU022	22	1/2"	15 x 1,2	75
ABPU025	25	-	15 x 1,2	75
ABPU028	28	3/4"	15 x 1,2	75
ABPU032	32	1"	15 x 1,2	75
ABPU037	37	-	18 x 1,2	75
ABPU040	40	1 1/4"	18 x 1,2	75
ABPU050	50	1 1/2"	18 x 1,2	75
ABPU063	63	2"	18 x 1,2	75

AB-IP

Isophonic bridge conduit clip

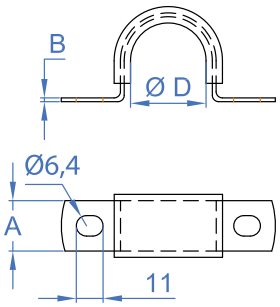

AB-IP

Pipe clip for fixing plate

CODE	ØD(MM)	ØD(")	A X B
ABIP015	15	1/4"	20 x 1,5
ABIP018	18	3/8"	20 x 1,5
ABIP022	22	1/2"	20 x 1,5
ABIP026	26	3/4"	20 x 1,5
ABIP028	28	-	20 x 1,5
ABIP035	35	1"	20 x 1,5
ABIP042	42	1 1/4"	20 x 1,5
ABIP048	48	1 1/2"	20 x 1,5
ABIP054	54	-	20 x 1,5
ABIP060	60	2"	20 x 1,5
ABIP067	67	-	20 x 1,5
ABIP075	75	2 1/2"	20 x 1,5
ABIP090	90	3"	20 x 1,5

AB-SI

Fixing plate for Isophonic bridge conduit clip

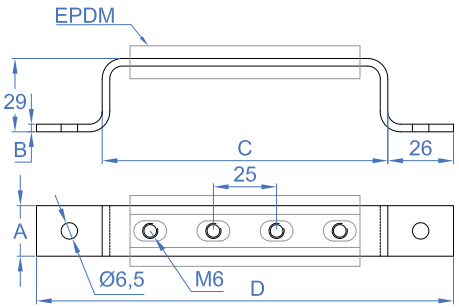

AB-SI

Fixing plate for Isophonic bridge conduit clip

CODE	A X B	C	D	HOLE NUM
ABSI003	20 x 3	88	140	3
ABSI004	20 x 3	113	165	4
ABSI005	20 x 3	138	190	5
ABSI006	20 x 3	163	215	6
ABSI007	20 x 3	188	240	7
ABSI008	20 x 3	213	265	8
ABSI009	20 x 3	238	290	9
ABSI010	20 x 3	263	315	10
ABSI011	20 x 3	288	340	11
ABSI012	20 x 3	313	365	12
ABSI013	20 x 3	338	390	13
ABSI014	20 x 3	363	415	14
ABSI015	20 x 3	388	440	15
ABSI016	20 x 3	413	465	16
ABSI017	20 x 3	438	490	17
ABSI018	20 x 3	463	515	18
ABSI019	20 x 3	488	540	19
ABSI020	20 x 3	513	565	20
ABSI021	20 x 3	538	590	21
ABSI022	20 x 3	563	615	22
ABSI025	20 x 3	638	690	25

AB-SF Hose clamp

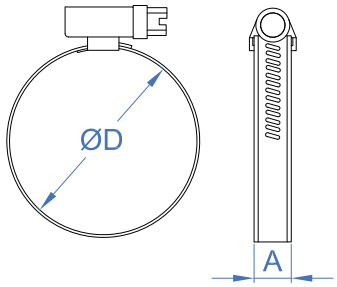

AB-SF Zinc-plated

CODE	ØD(MM)	ØD(")	A X B	TORQUE (NM)
ASF008016	8-16	5/16"- 5/8"	9 x 0,7	4,5
ASF012022	12-22	1/2"- 7/8"	9 x 0,7	4,5
ASF016027	16 - 27	5/8"- 1 1/16"	9 x 0,7	4,5
ASF020032	20 - 32	3/4"- 1 1/4"	9 x 0,7	4,5
ASF025040	25 - 40	1"- 1 5/8"	9 x 0,7	4,5
ASF030045	30 - 45	1 3/16"- 1 3/4"	9 x 0,8	4,5
ASF035050	35 - 50	1 3/8"- 2"	9 x 0,8	4,5
ASF040060	40 - 60	1 5/8"- 2 3/8"	9 x 0,8	4,5
ASF050070	50 - 70	2"- 2 3/4"	9 x 0,8	4,5
ASF060080	60 - 80	2 3/8"- 3 1/8"	9 x 0,8	4,5
ASF070090	70 - 90	2 3/4"- 3 1/2"	9 x 0,8	4,5
ASF080100	80 - 100	3 1/8"- 4"	9 x 0,8	4,5
ASF090110	90 - 110	3 1/2"- 4 3/8"	9 x 0,8	4,5
ASF100120	100 - 120	4"- 4 3/4"	9 x 0,8	4,5
ASF110130	110 - 130	4 3/8"- 5 1/8"	9 x 0,8	4,5
ASF120140	120 - 140	4 3/4"- 5 1/2"	9 x 0,8	4,5
ASF130150	130 - 150	5 1/8"- 5 7/8"	9 x 0,8	4,5

AB-SF A2 A2 Stainless steel

CODE	ØD(MM)	ØD(")	A X B	TORQUE (NM)
ASF2010016	10-16	5/16" - 5/8"	9 x 0,7	4
ASF2012020	12-20	1/2"- 7/8"	9 x 0,7	4
ASF2016027	16 - 27	5/8"- 1 1/16"	9 x 0,7	4
ASF2020032	20 - 32	3/4"- 1 1/4"	9 x 0,7	4
ASF2025040	25 - 40	1"- 1 5/8"	9 x 0,7	4
ASF2032050	32 - 50	1 3/8"- 2"	9 x 0,7	4
ASF2040060	40 - 60	1 5/8"- 2 3/8"	9 x 0,7	4
ASF2050070	50 - 70	2"- 2 3/4"	9 x 0,7	4
ASF2060080	60 - 80	2 3/8"- 3 1/8"	9 x 0,7	4
ASF2070090	70 - 90	2 3/4"- 3 1/2"	9 x 0,7	4
ASF2080100	80 - 100	3 1/8"- 4"	9 x 0,7	4
ASF2090110	90 - 110	3 1/2"- 4 3/8"	9 x 0,7	4
ASF2100120	100 - 120	4"- 4 3/4"	9 x 0,7	4
ASF2110130	110 - 130	4 3/8"- 5 1/8"	9 x 0,7	4
ASF2120140	120 - 140	4 3/4"- 5 1/2"	9 x 0,7	4
ASF2130150	130 - 150	5 1/8"- 5 7/8"	9 x 0,7	4

CI-PE Fixing band

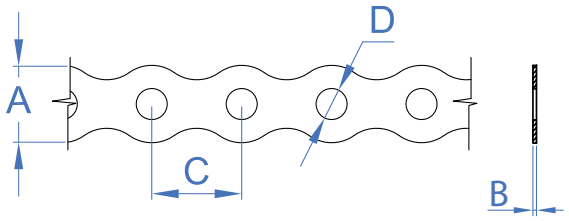

CI-PE Round fixing band ATLANTIS C2-M

CODE	A X B	C	D
CIPE1208	12 x 0,8	14	5
CIPE1708	17 x 0,8	20	7

CI-PE A2 Round fixing band. A2 Stainless steel

CODE	A X B	C	D
CIPEA21708	17 x 0,8	20	7

CI-PR

Straight fixing band ATLANTIS C2-M

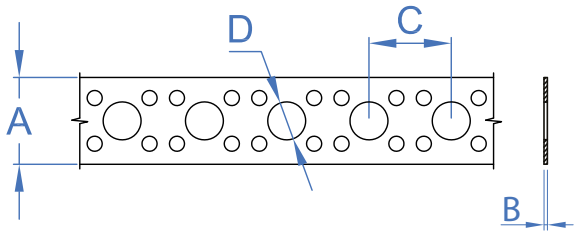

CI-PR

Straight fixing band ATLANTIS C2-M

CODE	A X B	C	D
CIPR1908	19 x 0,8	18	8,3
CIPR1208	12 x 0,8	12	6,2

AB-CR

Chromed pipe clamp M6

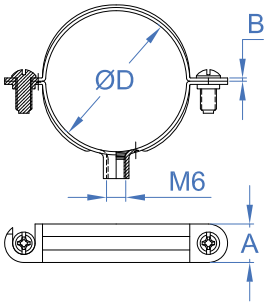

AB-CR

Chrome coated pipe clamp M6

CODE	ØD(MM)	ØD(")	A X B	MAXIMUN LOAD
ABCR010	10	1/8"	12 x 1,2	70
ABCR012	12	1/4"	12 x 1,2	70

AB-BU

Butane clamp

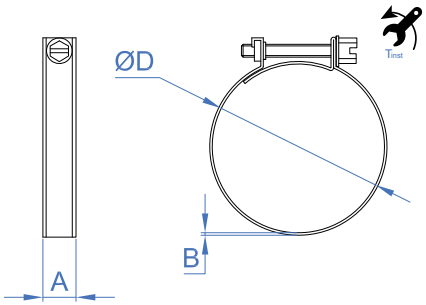

AB-BU

Butane clamp

CODE	ØD(MM)	ØD(")	A X B	TORQUE (NM)
ABBU1315	13-15	1/2" - 9/16"	9 x 0,6	2
ABBU1618	16-18	5/8" - 11/16"	9 x 0,6	2
ABBU1921	19-21	3/4" - 13/16"	9 x 0,6	2

AB-GM

Pipe clamp for gas yellow coated with chipboard screw

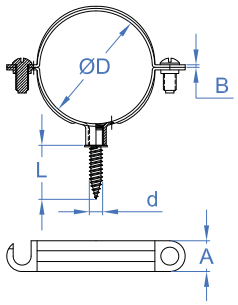

AB-GM

Yellow coated pipe clamp for gas with screw

CODE	ØD(MM)	ØD(")	A X B	MAXIMUN LOAD
ABGM012	12	1/8"	12 x 1,2	70
ABGM015	15	1/4"	12 x 1,2	70
ABGM018	18	3/8"	12 x 1,2	70
ABGM022	22	1/2"	12 x 1,2	70
ABGM028	28	3/4"	12 x 1,2	70
ABGM035	35	1"	12 x 1,2	70

AB-GS

Pipe clamp for gas black coated M6 with chipboard screw

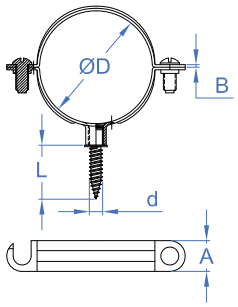

AB-GS

Black coated pipe clamp for gas M6 with screw

CODE	ØD(MM)	ØD(")	A X B	MAXIMUN LOAD
ABGS010	10	1/8"	12 x 1,2	70
ABGS012	12	-	12 x 1,2	70
ABGS015	15	1/4"	12 x 1,2	70
ABGS018	18	3/8"	12 x 1,2	70
ABGS022	22	1/2"	12 x 1,2	70
ABGS028	28	3/4"	12 x 1,2	70
ABGS035	35	1"	12 x 1,2	70
ABGS042	42	1 1/4"	12 x 1,2	100
ABGS054	54	-	12 x 1,2	100

AB-GD

Double pipe clamp for gas black coated M6 with chipboard screw

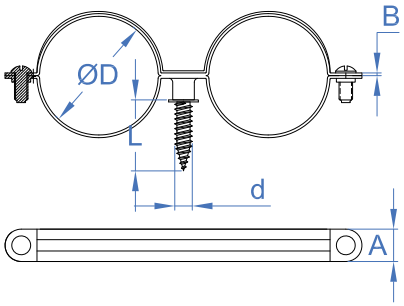

AB-GD

Double black coated pipe clamp for gas M6 with screw

CODE	ØD(MM)	ØD(")	A X B	MAXIMUN LOAD
ABGD012	12	1/8"	12 x 1,2	100
ABGD015	15	1/4"	12 x 1,2	100
ABGD018	18	3/8"	12 x 1,2	100
ABGD022	22	1/2"	12 x 1,2	100
ABGD028	28	3/4"	12 x 1,2	100

AB-PE Sprinkler pipe clamp

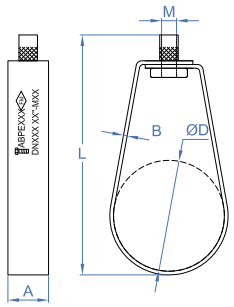

AB-PE Sprinkler pipe clamp

CODE	ØD(MM)	ØD(")	A X B	LENGTH	SCREW SIZE	MAXIMUN LOAD
ABPE028	DN 20	3/4"	21 x 1	72	M10 (3/8")	154
ABPE035	DN 25	1"	21 x 1	78	M10 (3/8")	186
ABPE040	DN 32	1 1/4"	21 x 1	88	M10 (3/8")	195
ABPE048	DN 40	1 1/2"	21 x 1,2	95	M10 (3/8")	236
ABPE060	DN 50	2"	21 x 1,2	105	M10 (3/8")	288
ABPE075	DN 65	2 1/2"	21 x 1,2	125	M10 (3/8")	426
ABPE090	DN 80	3"	21 x 1,2	140	M10 (3/8")	481
ABPE100	DN 90	3 1/2"	21 x 1,2	160	M10 (3/8")	569
ABPE115	DN 100	4"	21 x 2	173	M10 (3/8")	669
ABPE140	DN 125	5"	30 x 2	209	M12 (1/2")	907
ABPE160	DN 150	6"	30 x 2,5	249	M12 (1/2")	1186
ABPE220	DN 200	8"	35 x 2,5	309	M12 (1/2")	1723

AB-CH Drainpipe clamp M8

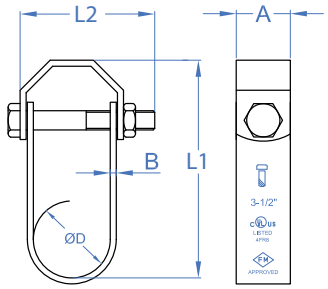

AB-CH Drainpipe clamp M8

CODE	ØD(MM)	ØD(")	A X B	L1	L2	MAXIMUN LOAD
ABCH00034	28	3/4"	22,5 x 2,5	82,5	50	153
ABCH01000	35	1"	22,5 x 2,5	99	57	172
ABCH01014	42	1 1/4"	22,5 x 2,5	106	70	196
ABCH01012	48	1 1/2"	22,5 x 2,5	107	75	239
ABCH02000	60	2"	25,5 x 2,5	126	90	290
ABCH02012	75	2 1/2"	26,0 x 3,0	156	110	385
ABCH03000	90	3"	26,0 x 3,0	169	115	484
ABCH04000	115	4"	30,0 x 4,0	200	15	673
ABCH05000	140	5"	32,0 x 4,5	231	200	913
ABCH06000	160	6"	36,5 x 4,5	260	225	1194
ABCH08000	220	8"	42,5 x 4,5	329	280	1836
ABCH10000	275	10"	44,5 x6,0	381	360	2671
ABCH12000	325	12"	50,0 x 6,0	457	410	3608
ABCH14000	355	14"	50,0 x 6,0	514	465	4296
ABCH16000	405	16"	64,0 x 6,0	560	520	5572

AB-IN

Simple polypropylene pipe clip with M6 threaded brass insert

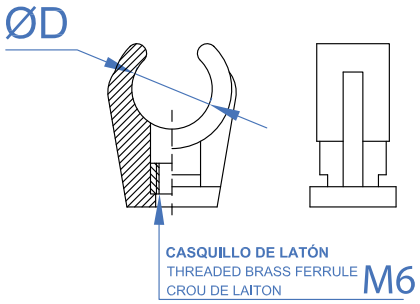

AB-IN

Simple polypropylene pipe clip with M6 threaded brass insert

CODE	ØD(MM)	ØD(")	SUITABLE FOR	MAXIMUN LOAD
ABIN012	12	1/4"	Carril 20/10	10
ABIN014	14-15	3/8"	Carril 20/10	10
ABIN016	16-18	-	Carril 20/10	10
ABIN020	20-22	-	Carril 20/10	10
ABIN025	25	-	Carril 20/10	10
ABIN028	28	3/4"	Carril 20/10	10
ABIN032	32	-	Carril 20/10	10
ABIN035	35	-	Carril 20/10	10

AB-ID

Double nylon pipe clip (polyamide 6.6) with M6 threaded brass insert

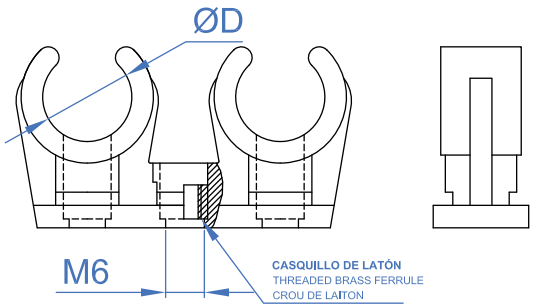

AB-ID

Double nylon pipe clip (polyamide 6.6), with M6 threaded brass insert

CODE	ØD(MM)	ØD(")	SUITABLE FOR	MAXIMUN LOAD
ABID012	12	1/4"	Carril 20/10	10
ABID014	14-15	3/8"	Carril 20/10	10
ABID016	16-18	-	Carril 20/10	10
ABID020	20-22	-	Carril 20/10	10
ABID028	28	3/4"	Carril 20/10	10

AB-GU

Closed polypropilene pipe clip with pre-thread M6

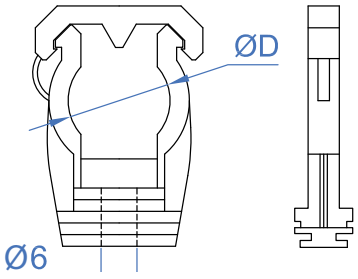

AB-GU

Closed polypropilene pipe clip, with pre-thread M6. Grey

CODE	ØD(MM)	ØD(")	SUITABLE FOR	MAXIMUN LOAD
ABGUG12	12	1/4"	20/10 27/18 28/30	40
ABGUG15	15	3/8"	20/10 27/18 28/30	40
ABGUG18	18	-	20/10 27/18 28/30	40
ABGUG20	20	-	20/10 27/18 28/30	40
ABGUG22	22	1/2"	20/10 27/18 28/30	40
ABGUG25	25	-	20/10 27/18 28/30	40
ABGUG28	28	-	20/10 27/18 28/30	40
ABGUG32	32	1"	20/10 27/18 28/30	40
ABGUG40	40	-	20/10 27/18 28/30	40
ABGUG50	50	-	20/10 27/18 28/30	40

AB-MUG

Multiuse pipe clamp

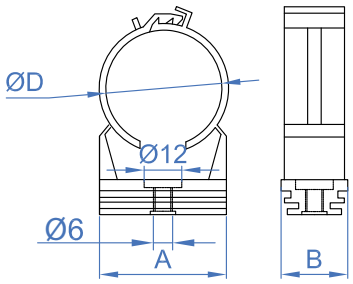

AB-MUG

Multiuse pipe clip

CODE	ØD(MM)	ØD(")	A X B	SUITABLE FOR	MAXIMUN LOAD
ABMUG12	12	-	17 x 20	20/10 27/18 28/30	40
ABMUG15	15	-	21 x 20	20/10 27/18 28/30	40
ABMUG18	18	-	25 x 20	20/10 27/18 28/30	40
ABMUG22	22	-	30 x 20	20/10 27/18 28/30	40
ABMUG26	26	-	33 x 20	20/10 27/18 28/30	40
ABMUG32	32	-	38 x 20	20/10 27/18 28/30	40
ABMUG40	40	-	46 x 20	20/10 27/18 28/30	40
ABMUG48	42	-	56 x 20	20/10 27/18 28/30	40

AB-PR

Duty pipe clamp with pre-thread M6

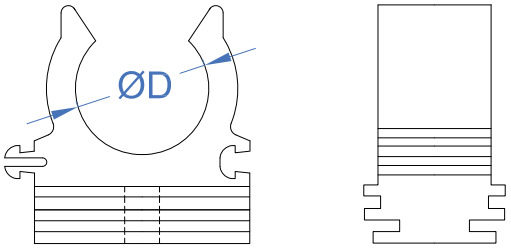

AB-PR

Grey

CODE	ØD(MM)	ØD(")	SUITABLE FOR	MAXIMUN LOAD
ABPRG15	15-18	3/8"	20/10 27/18 28/30	10
ABPRG20	20-22	-	20/10 27/18 28/30	10
ABPRG25	25-28	1/2"	20/10 27/18 28/30	10
ABPRG32	32-35	-	20/10 27/18 28/30	10
ABPRG40	40	-	20/10 27/18 28/30	10
ABPRG50	50	3/4"	20/10 27/18 28/30	10

AB-MS

Multitube clamp + plug. Single

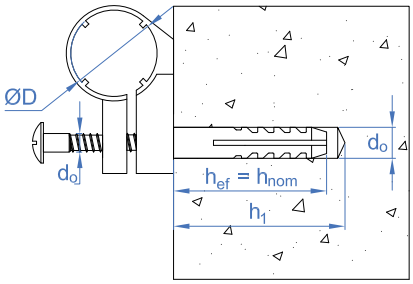

AB-MS

Multitube clamp + plug. Single

CODE	ØD(MM)	DRILL Ø	HOLE DEPTH MIN.	MIN. ANCHOR DEPTH	TENSION LOAD NON-CRACKED CONCRETE	TENSION LOAD HOLLOW BRICK	SCREW SIZE
ABMS10	10	5	30	20	9	5	3,5x35
ABMS12	12	5	30	20	9	5	3,5x35
ABMS14	14	6	35	25	15	8	4x45
ABMS16	16	6	35	25	15	8	4x45
ABMS18	18	8	45	30	16	12	4,5x50
ABMS20	20	8	45	30	16	12	4,5x50
ABMS22	22	8	45	30	16	12	4,5x50
ABMS26	26	10	50	40	30	15	6x60
ABMS28	28	10	50	40	30	15	6,5x60

AB-MD

Multitube clamp + plug. Double

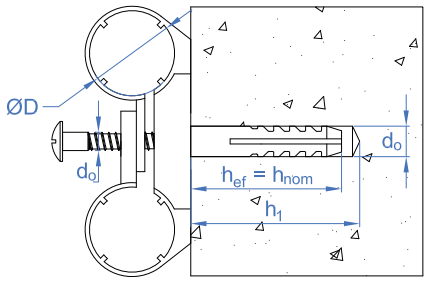

AB-MD

Multitube clamp + plug. Double

CODE	ØD(MM)	DRILL Ø	HOLE DEPTH MIN.	MIN. ANCHOR DEPTH	TENSION LOAD NON-CRACKED CONCRETE	TENSION LOAD HOLLOW BRICK	SCREW SIZE
ABMD10	10	8	60	30	16	12	4,5x50
ABMD12	12	8	60	30	16	12	4,5x50
ABMD14	14	8	60	30	16	12	4,5x50
ABMD16	16	8	60	30	16	12	4,5x50
ABMD18	18	10	70	40	30	15	6x60
ABMD20	20	10	70	40	30	15	6x60
ABMD22	22	10	70	40	30	15	6x60
ABMD26	26	10	70	40	30	15	6x60
ABMD28	28	10	70	40	30	15	6x60

AB-T

INDEXring tube fixing plug

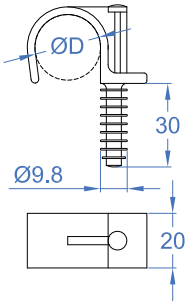

AB-TS

Simple

CODE	ØD(MM)	ØD(")	MAXIMUN LOAD
ABTS014	14 - 15	-	30
ABTS016	16 - 17	3/8"	30
ABTS018	18 - 19	-	30
ABTS020	20 - 21	1/2"	30
ABTS022	22 - 23	-	30
ABTS025	25 - 26	3/4"	30
ABTS028	28 - 29	-	30
ABTS032	30 - 32	-	30

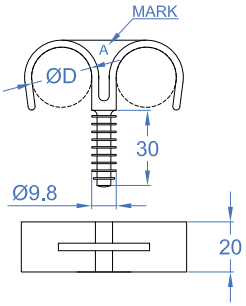

AB-TD

Double

CODE	ØD(MM)	ØD(")	MAXIMUN LOAD
ABTD016	15 - 16	3/8"	30
ABTD018	18 - 19	-	30
ABTD020	20 - 21	1/2"	30
ABTD022	22 - 23	-	30
ABTD025	25 - 26	3/4"	30
ABTD028	28 - 29	-	30

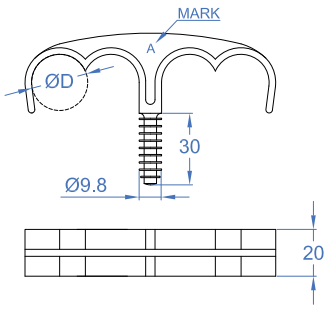

AB-TC

Quadruple

CODE	ØD(MM)	ØD(")	MAXIMUN LOAD
ABTC020	20 - 21	1/2"	30
ABTC025	25 - 26	3/4"	30

SU

Quick beam attachament system

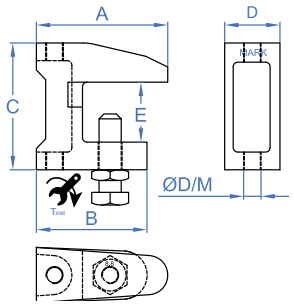

SU-MO

Beam clamp

CODE	A	B	C	D	E	TORQUE (NM)	INSTALLATION KEY (SW)	ØD (MM)	SCREW SIZE
SUMOP09	38	35	37	18	20	10	13	PASANTE Ø9	M8 x 35
SUMOP11	44	41	42	21	20	15	17	PASANTE Ø11	M10 x 40
SUMOP13	58	48	54	24	25	15	17	PASANTE Ø13	M10 x 50
SUMOM06	38	35	37	18	20	10	13	ROSCADO M6	M6 x 35
SUMOM08	38	35	37	18	20	10	13	ROSCADO M8	M8 x 35
SUMOM10	44	41	42	21	20	15	17	ROSCADOM10	M10 x 40
SUMOM12	58	48	54	24	25	15	17	ROSCADO M12	M10 x 50

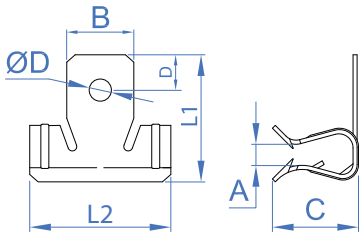

SU-CL

Suspension clip

CODE	A	B	C	D	L1	L2	ØD (MM)
SUCL02	1,5 - 4	13	14	10	28	28	6.3
SUCL04	4 - 10	19	23	10	34	40	6.3
SUCL10	10 - 15	19	23	10	40	40	6.3
SUCL15	15 - 20	19	23	10	40	40	6.3

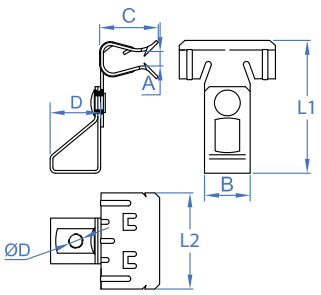

SU-VA Rod clip

CODE	A	B	C	D	L1	L2	ØD (MM)
SUVA0602	1,5 - 4	19	14	21	50	28	M6
SUVA0604	4 - 10	19	23	21	54	40	M6
SUVA0610	10 - 15	19	23	21	60	40	M6
SUVA0615	15 - 20	19	23	21	60	40	M6
SUVA0804	1,5 - 4	19	14	21	50	28	M8
SUVA0810	4 - 10	19	23	21	54	40	M8
SUVA0815	10 - 15	19	23	21	60	40	M8
SUVA0802	15 - 20	19	23	21	60	40	M8

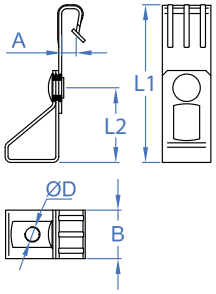

SU-CU Holder clip

CODE	A	B	L1	L2	ØD (MM)
SUCU0602	1,5 - 5	19	65	30	M6
SUCU0605	5 - 7	19	65	30	M6
SUCU0606	3 - 7	19	80	30	M6
SUCU0607	7 - 10	19	95	30	M6

SU-AB Beam clip for clamp

CODE	MAX. FIXTURE THICKNESS	MAX. BEAM WIDTH	ØD(MM)	H1	H3	SCREW SIZE
SUAB0603	3 - 7	36,5	M6	30	36,5	M6x9
SUAB0607	7 - 13	36,5	M6	36	36,5	M6x9
SUAB0614	14 - 20	36,5	M6	43	36,5	M6x9

SU-CA Beam clip for cable

CODE	MAX. FIXTURE THICKNESS	ØD(MM)	THICKNESS
SUCA0602	1 - 4	6-7	0,6
SUCA0604	4 - 7,5	6-7	0,6
SUCA0607	7,5 - 12	6-7	0,6
SUCA0802	1 - 4	8-9	0,6
SUCA0804	4 - 7,5	8-9	0,6
SUCA0807	7,5 - 12	8-9	0,6
SUCA1002	1 - 4	10-11	0,6
SUCA1004	4 - 7,5	10-11	0,6
SUCA1007	7,5 - 12	10-11	0,6
SUCA1202	1 - 4	12-14	0,6
SUCA1204	4 - 7,5	12-14	0,6
SUCA1207	7,5 - 12	12-14	0,6
SUCA1502	1 - 4	15-18	0,6
SUCA1504	4 - 7,5	15-18	0,6
SUCA1507	7,5 - 12	15-18	0,6
SUCA1902	1 - 4	19-24	0,6
SUCA1904	4 - 7,5	19-24	0,6
SUCA1907	7,5 - 12	19-24	0,6
SUCA2502	1 - 4	25-30	0,6
SUCA2504	4 - 7,5	25-30	0,6
SUCA2507	7,5 - 12	25-30	0,6

TAG

Threaded screw clamp and staple

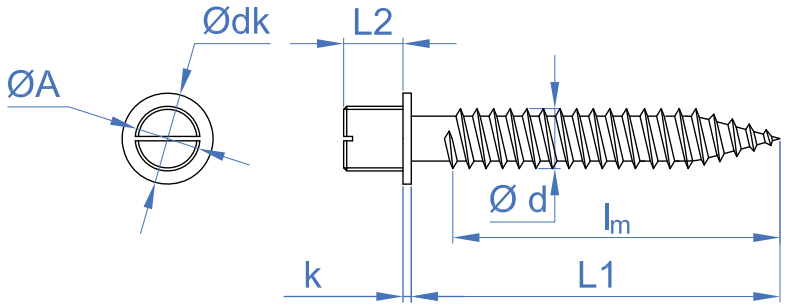

AB-TA

Zinc-plated. Slotted

CODE	METRIC	ØD	L1	L2	K	ØDK	THREAD LENGHT
ABTA0630	M6	5	30	6	1	8	30
ABTA0640	M6	5	40	6	1	8	40
ABTA0650	M6	5	50	6	1	8	50
ABTA0730	M7	6	22	6	1	9,5	-
ABTA0740	M7	6	32	6	1	9,5	-
ABTA0750	M7	6	42	6	1	9,5	-
ABTA0760	M7	6	52	6	1	9,5	-
ABTA0770	M7	6	62	6	1	9,5	-
ABTA0780	M7	6	72	6	1	9,5	-
ABTA0840	M8	6	40	7,5	1,4	8,5	40
ABTA0860	M8	6	60	7,5	1,4	8,5	60
ABTA0880	M8	6	80	7,5	1,4	8,5	45
ABTA1050	M10	8	50	9	1,7	12	50
ABTA1070	M10	8	70	9	1,7	12	45
ABTA1090	M10	8	90	9	1,7	12	45

AB-TA B

Yellow zinc-plated. Slotted

CODE	METRIC	ØD	L1	L2	K	ØDK	THREAD LENGHT
ABTAB0630	M6	5	30	6	1	8	30
ABTAB0640	M6	5	40	6	1	8	40
ABTAB0650	M6	5	50	6	1	8	50

AB-TA A2

A2 Stainless steel

CODE	METRIC	ØD	L1	L2	K	ØDK	THREAD LENGHT
ABTA20630	M6	5	30	7	1,2	7,8	30

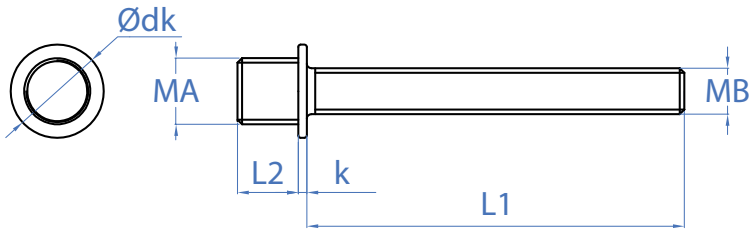

AB-TR

Threaded screw for clamps

CODE	METRIC	L1	L2	K	ØDK
ABTR05030	M7	30	6	1	9
ABTR05040	M7	40	6	1	9
ABTR05050	M7	50	6	1	9
ABTR05060	M7	60	6	1	9
ABTR06040	M7	40	6	1	9
ABTR06050	M7	50	6	1	9
ABTR06060	M7	60	6	1	9

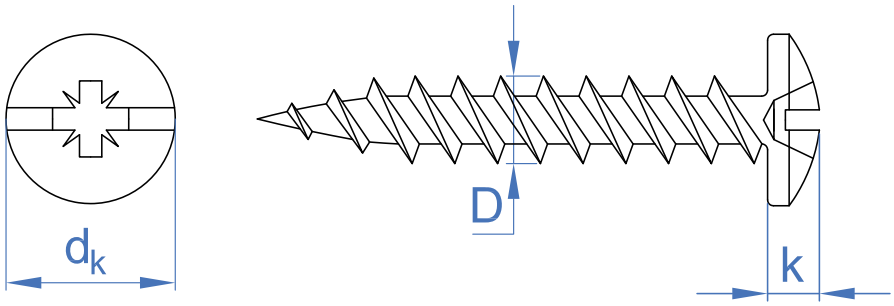

AB-TG

Threaded screws for clips

CODE	LENGTH	INSTALLATION KEY	ØDK	K	ØD(MM)90
ABTG4530	30	PZ2	10	3	4,5
ABTG4535	35	PZ2	10	3	4,5
ABTG4540	40	PZ2	10	3	4,5
ABTG5030	30	PZ3	12	3	5
ABTG5040	40	PZ3	12	3	5

ES-DR

Double threaded screw

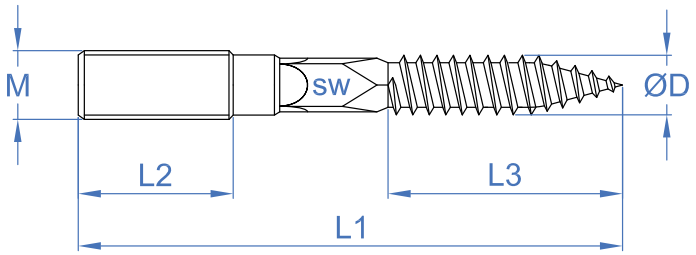

ES-DR

Zinc-plated. Tx

CODE	METRIC	LENGTH	ØD(MM)	INSTALLATION KEY (SW)	L1	L2	L3
ESDR06040	M6	40	6	-	40	12	24
ESDR06050	M6	50	6	-	50	16	28,5
ESDR06060	M6	60	6	-	60	18	34,5
ESDR06070	M6	70	6	-	70	26	34,5
ESDR06080	M6	80	6	-	80	34	34,5
ESDR08050	M8	50	7	-	50	13	29,5
ESDR08060	M8	60	7	-	60	15	37,5
ESDR08070	M8	70	7	-	70	25	37,5
ESDR08080	M8	80	7	6	80	28,5	37,5
ESDR08090	M8	90	7	6	90	28,5	48,5
ESDR08100	M8	100	7	6	100	33,5	48,5
ESDR08110	M8	110	7	6	110	42,5	48,5
ESDR08120	M8	120	7	6	120	50	48,5
ESDR08130	M8	130	7	6	130	50	48,5
ESDR10080	M10	80	8	8	80	18	46,5
ESDR10100	M10	100	9	8	100	24	57
ESDR10110	M10	110	9	8	110	38	57
ESDR10120	M10	120	9	8	120	45	57
ESDR10130	M10	130	9	8	130	50	57
ESDR10140	M10	140	9	8	140	50	57
ESDR10150	M10	150	9	8	150	50	57
ESDR10180	M10	180	9	8	180	50	57
ESDR10200	M10	200	9	8	200	50	57

ES-DA2

A2 Stainless steel. Tx

CODE	METRIC	LENGTH	ØD(MM)	INSTALLATION KEY (SW)	L1	L2	L3
ESDA208060	M8	60	7	6	60	20	30
ESDA210060	M10	60	9	8	60	20	30

SUPPORT CHANNELS RANGE

CODE	DESCRIPTION	MATERIAL	COATING
GPZ201010	Channel 20 x 10 x 1	A	Z
GPZ250808	Channel 25 x 8 x 0,80		
GPG271812	Channel 27 x 18 x 1.25	A	A
GPG283018	Channel 28 x 30 x 1.80		
GPG384020	Channel 38 x 40 x 2.00		
GPG351312	Channel 35 x 12 x 1,20		
GPG402015	Channel 40 x 20 x 1.50		
GPI271812	Channel 27 x 18 x 1.25	A2	
GPI283015	Channel 28 x 30 x 1.50		
GPP271812	Channel 27 x 18 x 1.25	A	
GPV251120	Channel 25 x 11 x 2.00	PVC	
GPO357510	Zinc-plated omega Channel slotted/plain	A	Z
GPO351515			
GLO357510			
GLO351515			
SPZ271820	Cantilever 27 x 18 x 1,20 x 200	A	Z
SPZ271830	Cantilever 27 x 18 x 1,20 x 300		
SPZ384020	Cantilever 38 x 40 x 2,00 x 200		
SPZ384025	Cantilever 38 x 40 x 2,00 x 250		
SPZ384030	Cantilever 38 x 40 x 2,00 x 300		
SPZ384035	Cantilever 38 x 40 x 2,00 x 350		
SPZ384040	Cantilever 38 x 40 x 2,00 x 400		
SPZ384050	Cantilever 38 x 40 x 2,00 x 500		
SPZ384060	Cantilever 38 x 40 x 2,00 x 600		
SPV2718	Vertical support	A	Z
SPV3840			
SPH2718	Horizontal support	A	Z
SPH3840			
SPGH2718	Horizontal channel support	A	Z
SPGH3840			
TG230620	Tope tornillo guía perforada	A	Z
TG230820			
TG230830			
TG340830			
TG41030			
TUG201006	Channel stud nut	A	Z
TUG201008			
TUG271808			
TUG271810			
TUGRA2706	Fast nut-guide with washer	A	Z
TUGRA2708			
TUGRA3808			
TUGRA3810			
TGR230620	Fast-fixing stop screw	A	Z
TGR230820			
TGR230830			
TGR340830			
TGR341030			
EMZ45	Zinc-plated and stainless steel brackets	A	Z
EMZ90			
EMZ00			
EMI45		A2	
EMI90			
EMI00			
PGZ2718	Zinc-plated and stainless steel U-fitting	A	Z
PGZ2830			
PGZ3840			
PGI2718		A2	
PGI2830			
PGI3840			
PUZ2718	Union plates for profiles	A	Z
PUZ3840			
SOTP2718	Plastic cap for framing systems		
SOTP2830			
SOTP3840			
SOTP4121			
SOTP4141			
SOPG27	Isophonic rubber profile	EPDM	
SOPG38			
SOPG41			

CODE	DESCRIPTION	MATERIAL	COATING
GPX412115	Channel 41 x 21 x 1.50	A	A
GPX412120	Channel 41 x 21 x 2.00		
GPX412125	Channel 41 x 21 x 2.50		
GPX414115	Channel 41 x 41 x 1.50		
GPX414120	Channel 41 x 41 x 2.00		
GPX414125	Channel 41 x 41 x 2.50		
GPX2M412120	Channel 41 x 21 x 2.00		
GPX2M414120	Channel 41 x 41 x 2.00		
SPX412115	Cantilever 41 x 21 x 2.50 x 150	A	Z
SPX412130	Cantilever 41 x 21 x 2.50 x 300		
SPX412145	Cantilever 41 x 21 x 2.50 x 450		
SPX414115	Cantilever 41 x 41 x 2.50 x 150		
SPX414130	Cantilever 41 x 41 x 2.50 x 300		
SPX414145	Cantilever 41 x 41 x 2.50 x 450		
SPX414160	Cantilever 41 x 41 x 2.50 x 600		
SPX414175	Cantilever 41 x 41 x 2.50 x 750		
SPX414110	Cantilever 41 x 41 x 2.50 x 1000		
SPGH3840	Horizontal channel support	A	Z
PRX01	Adjustable support INDEXTRUT	A	Z
SPRXH4121	Rectangular U base support INDEXTRUT	A	Z
SPRXV4121			
SPUX412100	Support U base INDEXTRUT	A	Z
SPUX412145			
ABGX4121	Channel clamp INDEXTRUT	A	Z
EMPX4121	Connecting piece for prof INDEXTRUT	A	Z
RESX300	Reinforcement support INDEXTRUT	A	Z
RESX550			
RTX01	Rotule INDEXTRUT	A	Z
EMX9002	Zinc- plated fixing plates INDEXTRUT	A	Z
EMX9004			
EMX4502			
EMX1302			
PGX4121	Profile bridges INDEXTRUT	A	Z
PGX4141			
UNEX412103	Angled brackets/plate T shaped INDEXTRUT	A	Z
UNPX42101			
UNPX42102			
UNPX42103			
UNPX42104			
UNTX412104			
SCRX090	Heavy duty angled bracket	A	Z
TUGX08	Channel nut	A	Z
TUGX10			
TUGXMU08	Channel spring nut INDEXTRUT	A	Z
TUGXMU10			
TGX0840	Profile buffer screws INDEXTRUT	A	Z
TGX0860			
TGX1040			
TGX1060			
TURX08	Nut quick fixation INDEXTRUT	A	Z
TURX10			
TURX12			
TURXA08	Nut INDEXTRUT with washer for quick fixation	A	Z
TURXA10			
TGRX0830	INDEXTRUT fast-fixing stop screw	A	Z
TGRX0860			
TGRX1030			
TGRX1060			
PAEXM08	Sliding guide	A	Z
PAEXM10			
SOTP4121	Plastic cap for framing systems		
SOTP4141			
SOPG41	Isophonic rubber profile	EPDM	

GEOMETRIC DATA

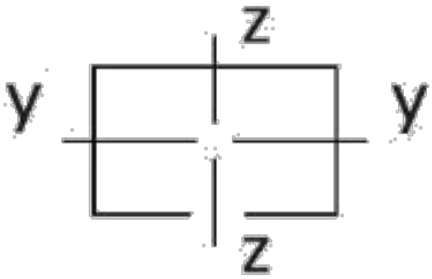

CODE	SECTION	WEIGHT	AREA	MOMENT OF INERTIA (Iy)	MOMENT OF INERTIA (Iz)	RESISTANT MODULE (Wy)	RESISTANT MODULE (Wz)
	[mm x mm]	[Kg/m]	[cm2]	[cm4]	[cm4]	[cm3]	[cm3]
GPZ201010	20 x 10	0.31	0.44	0.06	0.25	0.10	0.25
GPZ250808	25 x 8	0.26	0.35	0.03	0.30	0.06	0.24
GPG271812	27 x 18	0.66	0.84	0.37	0.97	0.34	0.71
GPG283018	28 x 30	1.25	1.60	1.79	2.10	1.03	1.50
GPG384020	38 x 40	2.00	2.55	5.39	6.18	2.39	3.25
GPG402015	40 x 20	0.94	1.30	0.71	3.10	0.57	1.55
GPP271812	27 x 18	0.66	0.84	0.37	0.97	0.34	0.71
GPI271812	27 x 18	0.66	0.79	0.36	0.90	0.33	0.67
GPI283015	28 x 30	1.25	1.37	1.54	1.82	0.89	1.30
GPI384020	37 x 40	2.00	2.55	5.39	6.18	2.39	3.25
GPX412115	41 x 21	1.21	1.41	0.89	3.58	0.70	1.75
GPX412120	41 x 21	1.55	1.99	0.95	4.44	0.75	2.17
GPX412125	41 x 21	1.71	2.28	1.32	5.54	1.03	2.70
GPX414115	41 X 41	1.65	2.42	4.88	5.99	2.05	2.92
GPX414120	41 x 41	2.09	2.65	5.84	7.62	2.46	3.72
GPX414125	41 x 41	2.53	3.28	7.08	9.25	2.98	4.51
GPX2M412120	41 x 21	1.55	1.99	0.95	4.44	0.75	2.17
GPX2M414120	41 x 41	2.09	2.65	5.84	7.62	2.46	3.72
SPZ271820	27 x 18	1,2	0.84	0.37	0.97	0.34	0.71
SPZ271830	27 x 18	1,2	0.84	0.37	0.97	0.34	0.71
SPZ384020	38 x 40	2,4	2.55	5.39	6.18	2.39	3.25
SPZ384025	38 x 40	2,4	2.55	5.39	6.18	2.39	3.25
SPZ384030	38 x 40	2,4	2.55	5.39	6.18	2.39	3.25
SPZ384035	38 x 40	2,4	2.55	5.39	6.18	2.39	3.25
SPZ384040	38 x 40	2,4	2.55	5.39	6.18	2.39	3.25
SPZ384050	38 x 40	2,4	2.55	5.39	6.18	2.39	3.25
SPZ384060	38 x 40	2,4	2.55	5.39	6.18	2.39	3.25
SPX412115	41 x 21	1,88	2.28	1.32	5.54	1.03	2.70
SPX412130	41 x 21	1,88	2.28	1.32	5.54	1.03	2.70
SPX412145	41 x 21	1,88	2.28	1.32	5.54	1.03	2.70
SPX414115	41 x 41	2,7	3.28	7.08	9.25	2.98	4.51
SPX414130	41 x 41	2,7	3.28	7.08	9.25	2.98	4.51
SPX414145	41 x 41	2,7	3.28	7.08	9.25	2.98	4.51
SPX414160	41 x 41	2,7	3.28	7.08	9.25	2.98	4.51
SPX414175	41 x 41	2,7	3.28	7.08	9.25	2.98	4.51
SPX414110	41 x 41	2,7	3.28	7.08	9.25	2.98	4.51

SPAIN SALES NETWORK



ÁLAVA
Mikel Paredes
mparedes@indexfix.com
Tfno. 679 559 519

ALBACETE
Antonio Álvarez
a.alvarezmegias@gmail.com
Tfno. 678 537 861

ALICANTE
Valentín Ramos
representacionesvalentin@gmail.com
Tfno. 606 305 980
Maxi Flores
Tfno. 647 447 793

ALMERÍA
José Plaza
jplazagonzalez1@gmail.com
Tfno. 608 956 641

ANDORRA
Pere Soro
peresoro@gmail.com
Tfno. 609 363 693

ASTURIAS
David Blanco
dblanco@indexfix.com
Tfno. 680 748 731

ÁVILA
Vicente Beltrán
vicentebeltran@telefonica.net
Tfno. 609 616 926

BADAJOZ
Rafael Córdoba
rcordoba@indexfix.com
Tlfno. 648 068 528

BALEARES
Antonio Forteza
repforpa@gmail.com
Tfno. 636 973 665
Agustín Forteza
repreforteza@gmail.com
Tfno. 660 725 880

BARCELONA
Jose Ramón Tello
jrtello@indexfix.com
Tfno. 619 033 535
Roger Rosell
rrosell@indexfix.com
Tfno. 618 361 743

BURGOS
Óscar Aliende
oaliende@indexfix.com
Tfno. 629 777 206

CÁCERES
Rafael Córdoba
rcordoba@indexfix.com
Tlfno. 648 068 528

CÁDIZ
José Antonio Prieto
prietocadiz@yahoo.es
Tfno. 667 552 000

CADIZ - CAMPO DE GIBRALTAR
Luís Fernando Reguera
luis@representacionesreguera.com
Tfno. 696 416 886

CANARIAS
Alfredo Carrancio Sosa
acarrancio@indexfix.com
Tfno. 600 462 930

CANTABRIA
Mikel Paredes
mparedes@indexfix.com
Tfno. 679 559 519

CASTELLÓN
Francisco Blasco
representacionesblasco@gmail.com
Tfno. 639 672 267

CEUTA
Luís Fernando Reguera
luis@representacionesreguera.com
Tfno. 696 416 886

CIUDAD REAL
Vicente Beltrán
vicentebeltran@telefonica.net
Tfno. 609 616 926

CÓRDOBA
Rafael Córdoba
rcordoba@indexfix.com
Tfno. 648 068 528

CUENCA
Vicente Beltrán
vicentebeltran@telefonica.net
Tfno. 609 616 926

GIRONA
Joan Caldas
j.caldas@cgac.es
Tfno. 629 314 169

GRANADA
Ismael Marco
ismaelmarcorios@gmail.com
Tfno. 670 242 337
Armando Ríos
Tfno. 670 453 269

GUADALAJARA
Vicente Beltrán
vicentebeltran@telefonica.net
Tfno. 609 616 926

GUIPÚZCOA
Koldo Balda González
baldasl@yahoo.es
Tfno. 629 476 660

HUELVA
Jose Mª Castillo
jmcastilloq@yahoo.es
Tfno. 667 769 427

HUESCA
Fernando Gonzalo
fgonzalo@fgmsl.es
Tfno. 609 879 313

JAEN
Ismael Marco
ismaelmarcorios@gmail.com
Tfno. 670 242 337
Armando Ríos
Tfno. 670 453 269

LA CORUÑA
Carlos Seoane
cseoane@indexfix.com
Tfno. 618 614 872

LA RIOJA
Álvaro Bartolomé
abartolome@indexfix.com
Tfno. 608 278 355

LEÓN
Francisco Viñuela
pacovinuelaleon@hotmail.com
Tfno. 670 597 272

LLEIDA
Pere Soro
peresoro@gmail.com
Tfno. 609 363 693

LUGO
Carlos Seoane
cseoane@indexfix.com
Tfno. 618 614 872

MADRID
Sergio de Miguel
sdemiguel@indexfix.com
Tfno. 608 566 769
Álvar Martin
amartin@indexfix.com
Tfno. 630 175 362
Cristina Conde
cconde@indexfix.com
Tfno. 638 547 099

MÁLAGA
Antonio J. Martín
repmartin@hotmail.com
Tfno. 610 701 604
Enrique Martín
Tfno. 667 574 316

MELILLA
José Plaza
jplazagonzalez1@gmail.com
Tfno. 608 956 641

MURCIA
Facundo Cuenca e Hijos, S.L.
info@facundocuenca.com
Tfno. 968 898 167

NAVARRA
Eduardo Pellejero
epellejerobalda@telefonica.net
Tfno. 658 842 592

ORENSE
Carlos Seoane
cseoane@indexfix.com
Tfno. 618 614 872

PALENCIA
Óscar Aliende
oaliende@indexfix.com
Tfno. 629 777 206

PONTEVEDRA
Carlos Seoane
cseoane@indexfix.com
Tfno. 618 614 872

SALAMANCA
Javier Vecino
javiervecino@hotmail.com
Tfno. 609 811 878

SEGOVIA
Vicente Beltrán
vicentebeltran@telefonica.net
Tfno. 609 616 926

SEVILLA
José Antonio Bonilla
jabonilla@jabonilla.es
Tfno. 607 433 102

SORIA
Comercial Arrieta C.B.
gorka_arrieta@yahoo.es
Tfno. 619 416 914

TARRAGONA
Pau Pérez
pperez@indexfix.com
620 504 077

TERUEL
Fernando Gonzalo
fgonzalo@fgmsl.es
Tfno. 609 879 313

TOLEDO
Vicente Beltrán
vicentebeltran@telefonica.net
Tfno. 609 616 926

VALENCIA
Francisco Blasco
representacionesblasco@gmail.com
Tfno. 639 672 267

VALLADOLID
Javier Vecino
javiervecino@hotmail.com
Tfno. 609 811 878

VIZCAYA
Mikel Paredes
mparedes@indexfix.com
Tfno. 679 559 519

ZAMORA
Francisco Viñuela
pacovinuelaleon@hotmail.com
Tfno. 670 597 272

ZARAGOZA
Fernando Gonzalo
fgonzalo@fgmsl.es
Tfno. 609 879 313

INTERNATIONAL PRESENCE



ALGERIA
ARAB EMIRATES
AUSTRALIA
AUSTRIA
BANGLADESH
BELGIUM
BENIN
BOLIVIA
BOSNIA
BULGARIA
CAMEROON
COLOMBIA
CONGO
CROATIA
CUBA
CYPRUS
CZECH REPUBLIC
DENMARK
DOMINICAN REPUBLIC
EGYPT
ENGLAND
EQUATORIAL GUINEA
ESTONIA
FINLAND
FRANCE
FRENCH GUIANA
FRENCH POLYNESIA
GABON
GERMANY
GREECE
HOLLAND
HONDURAS
HUNGARY
ICELAND
INDIA
INDONESIA
IRAN
IRELAND
ISLA GUADALUPE
ISRAEL
ITALY
IVORY COAST
KOSOVO
KUWAIT
LATVIA
LEBANON
LITHUANIA
LUXEMBOURG
MACEDONIA
MADAGASCAR
MALT
MARTINIQUE
MAURICIO
MEXICO
MONTENEGRO
MOROCCO
NEW CALEDONIA
NORTH IRELAND
NORWAY
OMAN
PAKISTAN
PANAMA
PERU
POLOND
PORTUGAL
QATAR
REUNION
ROMANIA
RUSSIA
SAUDI ARABIA
SCOTLAND
SENEGAL
SERBIA
SINGAPORE
SLOVAK REPUBLIC
SLOVENIA
SWEDEN
SWITZERLAND
THAILAND
TUNISIA
TURKEY
UKRAINE
UNITED STATES
URUGUAY

FRANCE - Aquitaine, Languedoc-Roussillon, Limousin, Midi-Pyrénées
Thierry Nouvel - T-Nouvel
t-nouvel@indexfix.com
+ 33 (0) 608.578.114

FRANCE - Auvergne, Bourgogne, Corse, Centre, Rhône-Alpes
Sales-up
Pierre Broizart
pbroizart@indexfix.com
+ 33 (0) 665.493.382

FRANCE - Bretagne, Pays de la Loire
Rodolphe Hirn - STE Hirn Representations
rhirn@indexfix.com
+ 33 (0) 676.282.469

FRANCE - Île de France
Geoffroy Ehlinger
gehlinger@indexfix.com
+ 33 (0) 675.474.552

FRANCE - Corse
Noel Stromboni
nstromboni@indexfix.com
+ 33 (0) 67.163.2326

FRANCE - DOM TOM
Jacques Vergé
jverge@indexfix.com
+ 33 (0) 468.691.968

FRANCE – PACA
Jean Vivien – SD-PRO
contact.sdpro@free.fr
+33 (0) 607.853.297

FRANCE - GRAND EST
Frederic Koenig
fred.koenig@outlook.fr
+ 33 (0) 633454230

GERMANY
Dieter Fernandez
dfernandez@indexfix.com
+ 49 (0) 171 27 64 898

ITALY
Sansone Rappresentanza
sansonerappresentanza@gmail.com
+39 3925804863

Julio Gonzalez
jgonzalez@indexfix.com
+39 3283764305

ROMANIA
Dacian Lupu
dlupu@indexfix.com
+ 40 775 197 970

SÉNÉGAL / CÔTE D'IVOIRE
BÉNIN / CAMEROON
GABON / CONGO
Jacques Vergé
jverge@indexfix.com
+ 33 (0) 468.691.968

MOROCCO
NOUMAREP
Brahim Nouçair
noucair@indexfix.com
+ 212 (0) 122.230.21.27

PORTUGAL
Marco Sousa
marcosousa@indexfix.com
+ 351 913.908.536

GREECE
M.I. SASSON & CO O.E.
msaso@indexfix.com
+ 30 6932 406 106


INDEX
A PERFECT FIXING

SALES CONDITIONS

SHIPPING

Shipping cost will be paid when the value of the order exceed the amount agree for free transport as sale condition between the manager of the country and the client. This conditions are considered using our usual transport agency.
When the trasnsport cost will be paid for the client and the client dont express directly his intention to use another type of treasnport or company, the order will be shipped with our regular agency transport.
At the moment of received the order, please verify the condition of the order, if there is some damage in the order, please proceed to state this one into the receipt of the agency transport and comunicate as soon as possible this claim or objection to your contact person in INDEX.
For orders which the total amount will be less than 250€, should be charge 30 € as handling cost.

PAYMENT CONDITIONS

No replacement costs admitted.

60-day direct money order, net payment.

If bills of exchange are not domiciled, under no circumstances shall INDEX A Perfect Fixing be responsible for possible return expenses due to unpaid drafts.

Payment documents must be sent within a maximum of 30 days after invoice date.

Payment documents which do not respect payments due date shown on our invoice shall incur a 1% monthly deferral cost.

Our computer system automatically retains any orders in the event of arrears or delay in the receipt of payment documents.

DELIVERY TIME

Unless expressly agreed with our Headquarters, the delivery times indicated by our representatives are to be used as a guide.
Delay in delivery times or deadlines shall not lead to penalties.

AUGUST AND DECEMBER

Due dates that are handled in these months shall not have charges or credits.

If payment due is fractioned at 50% between the previous and following month, no charges or credits are to be applied.

If payment due is brought forward to the previous month, a 1% discount for advance payment shall be applied to the invoice.

If payment due is deferred to the following month, a 1% charge shall be applied to the invoice for financial costs.

MATERIAL RETURNS

Material returns shall not be accepted 15 days after delivery date.

If the return is due to reasons not attributable to INDEX A Perfect Fixing, the customer shall return the goods with prepaid shipping. In addition, the client is to be charged any costs arising by way of repackaging, as well as those incurred for initial shipment transportation. The surcharge shall total approximately 20% of the value of the goods.

The value of the returned goods or the payment done, shall be deducted from the origin bill and costumer shall be notified.

Material returned with unpaid shipping costs shall not be accepted unless it comes through out usual transport agencies.

The Courts and Tribunals of the city of Logroño shall be considered the competent authority for any questions arising from sales performed by INDEX A Perfect Fixing (Técnicas Expansivas, S.L.). Prices do not include VAT. INDEX A Perfect Fixing reserves the right to change prices, packaging or articles in stock without prior notice.

INDEX A Perfect Fixing, due to production requirements, reserves the right to modify product design or characteristics without prior notice. Images in this catalogue are informative illustrations with no contractual obligation and may not coincide with the original model.

Ref.	page
6921108020	212
6921108050	212
6921108070	212
9758ZM05	310
9758ZM06	310
9758ZM08	310
9758ZM10	310
9758ZM12	310
9758ZM14	310
9758ZM16	310
9758ZM18	310
9758ZM20	310
9758ZM22	310
9758ZM24	310
9758ZM27	310
9758ZM30	310
9758ZM33	310
9758ZM36	310
975A2M04	310
975A2M05	310
975A2M06	310
975A2M08	310
975A2M10	310
975A2M12	310
975A2M14	310
975A2M16	310
975A2M18	310
975A2M20	310
975A2M22	310
975A2M24	310
975A2M27	310
975A2M30	310
975A2M33	310
975A2M36	310
975ZM04	310
975ZM05	310
975ZM06	310
975ZM08	310
975ZM10	310
975ZM12	310
975ZM14	310
975ZM16	310
975ZM18	310
975ZM20	310
975ZM22	310
975ZM24	310
975ZM27	310
975ZM2M06	311
975ZM30	310
975ZM33	310
975ZM36	310
AACAR06	68
AACAR08	68
AACAR10	68
AACAR12	68
AACCA06	68
AACCA08	68
AACCA10	68
AACCA12	68
AACCA16	68
AACCI06	68
AACCI08	68
AACCI10	68
AACCI12	68
AACES06	68
AACES08	68
AACES10	68
AACES12	68
AACGA06	68
AACGA08	68

Ref.	page
AACGA10	68
AACGA12	68
AACTO06	68
AACTO08	68
AACTO10	68
AACTO12	68
AACTO16	68
AB6I012	252
AB6I015	252
AB6I016	252
AB6I018	252
AB6I022	252
AB6I026	252
AB6I028	252
AB6I032	252
AB6I035	252
AB6I042	252
AB6I048	252
AB6I054	252
AB6I060	252
AB7IDZ0810	254
AB7IDZ1012	254
AB7IDZ1214	254
AB7IDZ1416	254
AB7IDZ1618	254
AB7IDZ1820	254
AB7IDZ2022	254
AB7IDZ2224	254
AB7IDZ2628	254
AB7IZ010	254
AB7IZ012	254
AB7IZ014	254
AB7IZ016	254
AB7IZ018	254
AB7IZ020	254
AB7IZ022	254
AB7IZ024	254
AB7IZ026	254
AB7IZ028	254
AB7IZ032	254
AB7IZ034	254
AB7IZ036	254
AB7IZ038	254
AB7IZ040	254
AB7IZ050	254
ABA4832	154
ABA4838	154
ABA4845	154
ABA4850	154
ABA5538	154
ABA5545	154
ABA5555	154
ABA5565	154
ABA6360	154
ABA6370	154
ABA6385	154
ABAIS13010	241
ABAIS13012	241
ABAIS13015	241
ABAIS13018	241
ABAIS13022	241
ABAIS13028	241
ABAIS19010	241
ABAIS19012	241
ABAIS19015	241
ABAIS19017	241
ABAIS19018	241
ABAIS19022	241
ABAIS19028	241
ABAIS19035	241

Ref.	page
ABAIS19042	241
ABAIS19054	241
ABAIS19060	241
ABAIS19064	241
ABAIS19067	241
ABAIS19076	241
ABAIS19080	241
ABAIS19114	241
ABAIS30027	241
ABAIS30034	241
ABAIS30042	241
ABAIS30049	241
ABAIS30054	241
ABAIS30060	241
ABAIS30076	241
ABAIS30089	241
ABAIS30108	241
ABAIS30114	241
ABAIS40049	241
ABAIS40060	241
ABAIS40089	241
ABAIS40114	241
ABAIS40133	241
ABAIS40140	241
ABAIS40159	241
ABAIS40168	241
ABAIS40219	241
ABBU1315	260
ABBU1618	260
ABBU1921	260
ABCH00034	264
ABCH01000	264
ABCH01012	264
ABCH01014	264
ABCH02000	264
ABCH02012	264
ABCH03000	264
ABCH04000	264
ABCH05000	264
ABCH06000	264
ABCH08000	264
ABCH10000	264
ABCH12000	264
ABCH14000	264
ABCH16000	264
ABCIKIT30	265
ABCR010	259
ABCR012	259
ABD6012	251
ABD6015	251
ABD6018	251
ABD6022	251
ABD6028	251
ABDE075	243
ABDE090	243
ABDE110	243
ABDE125	243
ABDE160	243
ABDE200	243
ABDE250	243
ABDE315	243
ABDI0012	252
ABDI0015	252
ABDI0018	252
ABDI0022	252
ABDI0028	252
ABDP075	243
ABDP090	243
ABDP110	243
ABDP125	243

Ref.	page
ABDP160	243
ABDP200	243
ABDP250	243
ABDZ6012	251
ABDZ6015	251
ABDZ6018	251
ABDZ6022	251
ABDZ6028	251
ABDZ70810	253
ABDZ71012	253
ABDZ71214	253
ABDZ71416	253
ABDZ71618	253
ABDZ71820	253
ABDZ72022	253
ABDZ72224	253
ABDZ72628	253
ABE144219	143
ABE144225	143
ABE144816	143
ABE144819	143
ABE144819CP	143
ABE144825	143
ABE144832	143
ABE144838	143
ABE145522	143
ABE145532	143
ABE164219	143
ABE164816	143
ABE164819	143
ABE164819CP	143
ABE164825	143
ABE164832	143
ABE164838	143
ABE165519	143
ABE165522	143
ABE165522CP	143
ABE165525	143
ABE165532	143
ABE165538	143
ABE165550	143
ABE165563	143
ABE165575	143
ABE166310	143
ABE166311	143
ABE166312	143
ABE166313	143
ABE166314	143
ABE166319	143
ABE166325	143
ABE166325CP	143
ABE166332	143
ABE166338	143
ABE166350	143
ABE166363	143
ABE166375	143
ABE166380	143
ABE166390	143
ABE184819	143
ABE184825	143
ABE184838	143
ABE185522	143
ABE185525	143
ABE185532	143
ABE185538	143
ABE185550	143
ABE185563	143
ABE186310	143
ABE186311	143
ABE186312	143

Ref.	page
ABE186313	143
ABE186314	143
ABE186319	143
ABE186325	143
ABE186332	143
ABE186338	143
ABE186350	143
ABE186363	143
ABE186375	143
ABE186380	143
ABE186390	143
ABE255522	143
ABE255525	143
ABE256310	143
ABE256311	143
ABE256312	143
ABE256313	143
ABE256314	143
ABE256325	143
ABE256332	143
ABE256338	143
ABE256350	143
ABE256363	143
ABE256380	143
ABE256390	143
ABE3509	142
ABE3513	142
ABE3516	142
ABE3519	142
ABE4213	142
ABE4216	142
ABE4219	142
ABE4225	142
ABE4232	142
ABE4238	142
ABE4813	142
ABE4816	142
ABE4819	142
ABE4825	142
ABE4832	142
ABE4838	142
ABE5519	142
ABE5522	142
ABE5525	142
ABE5532	142
ABE5538	142
ABE5550	142
ABE5563	142
ABE5575	142
ABE6310	142
ABE6311	142
ABE6312	142
ABE6313	142
ABE6314	142
ABE6315	142
ABE6316	142
ABE6318	142
ABE6319	142
ABE6320	142
ABE6322	142
ABE6324	142
ABE6325	142
ABE6332	142
ABE6338	142
ABE6350	142
ABE6363	142
ABE6375	142
ABE6380	142
ABE6390	142
ABEI4213	142

Ref.	page
ABEI4216	142
ABEI4219	142
ABEI4813	142
ABEI4816	142
ABEI4819	142
ABEI4825	142
ABEI4832	142
ABEI5519	142
ABEI5522	142
ABEI5525	142
ABEI6319	142
ABEI6325	142
ABFC09	316
ABFC14	316
ABFC19	316
ABFP25	316
ABFP32	316
ABGA018	242
ABGA022	242
ABGA028	242
ABGA035	242
ABGA040	242
ABGA048	242
ABGA054	242
ABGA060	242
ABGA075	242
ABGA090	242
ABGA100	242
ABGA110	242
ABGA115	242
ABGA140	242
ABGA160	242
ABGD012	261
ABGD015	261
ABGD018	261
ABGD022	261
ABGD028	261
ABGM012	260
ABGM015	260
ABGM018	260
ABGM022	260
ABGM028	260
ABGM035	260
ABGS010	261
ABGS012	261
ABGS015	261
ABGS018	261
ABGS022	261
ABGS028	261
ABGS035	261
ABGS042	261
ABGS054	261
ABGUG15	277
ABGUG18	277
ABGUG20	277
ABGUG22	277
ABGUG25	277
ABGUG28	277
ABGUG32	277
ABGUG40	277
ABGUG50	277
ABGX4121	294
ABIA015	235
ABIA018	235
ABIA022	235
ABIA028	235
ABIA035	235
ABIA042	235
ABIA048	235
ABIA054	235

Ref.	page
ABIA060	235
ABIA075	235
ABIA090	235
ABIA100	235
ABIA110	235
ABIA115	235
ABIA125	235
ABICP060	240
ABICP075	240
ABICP090	240
ABICP110	240
ABICP140	240
ABICP160	240
ABICP220	240
ABICP270	240
ABICP315	240
ABID012	276
ABID014	276
ABID016	276
ABID020	276
ABID028	276
ABIN012	276
ABIN014	276
ABIN016	276
ABIN020	276
ABIN025	276
ABIN028	276
ABIN032	276
ABIN035	276
ABIP015	256
ABIP018	256
ABIP022	256
ABIP026	256
ABIP028	256
ABIP035	256
ABIP042	256
ABIP048	256
ABIP054	256
ABIP060	256
ABIP067	256
ABIP075	256
ABIP090	256
ABIR015	235
ABIR018	235
ABIR022	235
ABIR028	235
ABIR035	235
ABIR040	235
ABIR048	235
ABIR054	235
ABIR060	235
ABITD015	259
ABITD018	259
ABITD022	259
ABITS015	259
ABITS018	259
ABITS022	259
ABITS028	259
ABM6008	250
ABM6010	250
ABM6012	250
ABM6014	250
ABM6015	250
ABM6016	250
ABM6018	250
ABM6020	250
ABM6022	250
ABM6025	250
ABM6026	250
ABM6028	250

Ref.	page
ABM6032	250
ABM6035	250
ABM6037	250
ABM6040	250
ABM6042	250
ABM6047	250
ABM6050	250
ABM6054	250
ABM6060	250
ABM6063	250
ABM6A2012	251
ABM6A2015	251
ABM6A2018	251
ABM6A2020	251
ABM6A2022	251
ABM6A2028	251
ABM8050	242
ABM8063	242
ABM8075	242
ABM8090	242
ABM8110	242
ABM8125	242
ABM8160	242
ABM8200	242
ABM8250	242
ABM8315	242
ABMD10	278
ABMD12	278
ABMD14	278
ABMD16	278
ABMD18	278
ABMD20	278
ABMD22	278
ABMD26	278
ABMD28	278
ABMS10	278
ABMS12	278
ABMS14	278
ABMS16	278
ABMS18	278
ABMS20	278
ABMS22	278
ABMS26	278
ABMS28	278
ABMUG15	277
ABMUG18	277
ABMUG22	277
ABMUG26	277
ABMUG32	277
ABMUG40	277
ABMUG48	277
ABMZ6008	250
ABMZ6010	250
ABMZ6012	250
ABMZ6014	250
ABMZ6015	250
ABMZ6016	250
ABMZ6018	250
ABMZ6020	250
ABMZ6022	250
ABMZ6025	250
ABMZ6026	250
ABMZ6028	250
ABMZ6032	250
ABMZ6035	250
ABMZ6037	250
ABMZ6040	250
ABMZ6042	250
ABMZ6047	250
ABMZ6050	250

Ref.	page
ABMZ6054	250
ABMZ6060	250
ABMZ6063	250
ABMZ7008	253
ABMZ7010	253
ABMZ7012	253
ABMZ7014	253
ABMZ7016	253
ABMZ7018	253
ABMZ7020	253
ABMZ7022	253
ABMZ7024	253
ABMZ7025	253
ABMZ7026	253
ABMZ7028	253
ABMZ7032	253
ABMZ7034	253
ABMZ7036	253
ABMZ7038	253
ABMZ7040	253
ABMZ7050	253
ABMZ7063	253
ABP3509	153
ABP3511	153
ABP3513	153
ABP3516	153
ABP3519	153
ABP3522	153
ABP3525	153
ABP3913	153
ABP3916	153
ABP3919	153
ABP3922	153
ABP3925	153
ABP3932	153
ABP3938	153
ABP4213	153
ABP4216	153
ABP4219	153
ABP4222	153
ABP4225	153
ABP4232	153
ABP4238	153
ABP4813	153
ABP4816	153
ABP4819	153
ABP4825	153
ABP4832	153
ABP4838	153
ABP4850	153
ABP5519	153
ABP5525	153
ABP5532	153
ABP5538	153
ABP5550	153
ABPE028	264
ABPE035	264
ABPE040	264
ABPE048	264
ABPE060	264
ABPE075	264
ABPE090	264
ABPE100	264
ABPE115	264
ABPE140	264
ABPE160	264
ABPE220	264
ABPI006	255
ABPI008	255
ABPI010	255

Ref.	page
ABPI012	255
ABPI014	255
ABPI016	255
ABPI018	255
ABPI020	255
ABPI022	255
ABPI025	255
ABPI026	255
ABPI028	255
ABPI032	255
ABPI040	255
ABPI042	255
ABPI047	255
ABPI050	255
ABPI063	255
ABPID016	138
ABPID020	138
ABPID025	138
ABPID032	138
ABPM720	314
ABPM730	314
ABPM740	314
ABPRG12	278
ABPRG15	278
ABPRG20	278
ABPRG25	278
ABPRG32	278
ABPRG40	278
ABPRG50	278
ABPT3513	154
ABPT3516	154
ABPT3519	154
ABPT3913	154
ABPT3916	154
ABPT4213	154
ABPT4216	154
ABPT4219	154
ABPT4225	154
ABPT4232	154
ABPT4819	154
ABPT4825	154
ABPT4832	154
ABPT4838	154
ABPT4850	154
ABPU016	255
ABPU018	255
ABPU020	255
ABPU022	255
ABPU025	255
ABPU028	255
ABPU032	255
ABPU037	255
ABPU040	255
ABPU050	255
ABPU063	255
ABR3509	150
ABR3509BLE	151
ABR3511	150
ABR3513	150
ABR3513BLE	151
ABR3516	150
ABR3516BLE	151
ABR3519	150
ABR3522	150
ABR3525	150
ABR3532	150
ABR3913	150
ABR3916	150
ABR3919	150
ABR3925	150

Ref.	page
ABR3932	150
ABR4213	150
ABR4213BLE	151
ABR4216	150
ABR4216BLE	151
ABR4219	150
ABR4219BLE	151
ABR4222	150
ABR4225	150
ABR4232	150
ABR4238	150
ABR4250	150
ABR4810	150
ABR4811	150
ABR4812	150
ABR4813	150
ABR4816	150
ABR4819	150
ABR4822	150
ABR4825	150
ABR4825BLE	151
ABR4832	150
ABR4838	150
ABR4845	150
ABR4850	150
ABR4860	150
ABR4880	150
ABR4890	150
ABR5519	150
ABR5522	150
ABR5525	150
ABR5532	150
ABR5538	150
ABR5545	150
ABR5560	150
ABR5573	150
ABRA015	234
ABRA018	234
ABRA022	234
ABRA028	234
ABRA035	234
ABRA042	234
ABRA048	234
ABRA054	234
ABRA060	234
ABRA075	234
ABRA090	234
ABRA100	234
ABRA110	234
ABRA115	234
ABRA125	234
ABRA23509	151
ABRA23513	151
ABRA23519	151
ABRA24213	151
ABRA24216	151
ABRA24219	151
ABRA24225	151
ABRA24816	151
ABRA24819	151
ABRA24825	151
ABRA24832	151
ABRA24838	151
ABRA24850	151
ABRC3509	152
ABRC3513	152
ABRC3516	152
ABRC3519	152
ABRC3913	152
ABRC3916	152

Ref.	page
ABRC3919	152
ABRC3925	152
ABRC3938	152
ABRC4213	152
ABRC4216	152
ABRC4219	152
ABRC4225	152
ABRC4232	152
ABRC4238	152
ABRC4810	152
ABRC4816	152
ABRC4819	152
ABRC4825	152
ABRC4832	152
ABRC4838	152
ABRC4845	152
ABRC4850	152
ABRC4860	152
ABRC4880	152
ABRC4890	152
ABRC5525	152
ABRC5573	152
ABRE018	236
ABRE022	236
ABRE028	236
ABRE035	236
ABRE040	236
ABRE048	236
ABRE054	236
ABRE060	236
ABRE070	236
ABRE075	236
ABRE083	236
ABRE090	236
ABRE100	236
ABRE110	236
ABRE115	236
ABRE125	236
ABRE133	236
ABRE140	236
ABRE150	236
ABRE160	236
ABRE180	236
ABRE200	236
ABRE220	236
ABRE250	236
ABRE280	236
ABRE300	236
ABRE315	236
ABRE355	236
ABRE400	236
ABRE450	236
ABRE500	236
ABRE560	236
ABRE600	236
ABRE630	236
ABRE710	236
ABRE800	236
ABRE900	236
ABRE910	236
ABRE911	236
ABRE912	236
ABREA2018	237
ABREA2022	237
ABREA2028	237
ABREA2035	237
ABREA2040	237
ABREA2048	237
ABREA2054	237
ABREA2060	237

Ref.	page
ABREA2075	237
ABREA2090	237
ABREA2110	237
ABREA2115	237
ABREA2125	237
ABREA2140	237
ABREA2160	237
ABREA2200	237
ABREA4018	237
ABREA4022	237
ABREA4028	237
ABREA4035	237
ABREA4040	237
ABREA4048	237
ABREA4054	237
ABREA4060	237
ABREA4075	237
ABREA4090	237
ABREA4110	237
ABREA4115	237
ABREA4125	237
ABREA4140	237
ABREA4160	237
ABREA4200	237
ABRI018	238
ABRI022	238
ABRI028	238
ABRI035	238
ABRI040	238
ABRI048	238
ABRI054	238
ABRI060	238
ABRI070	238
ABRI075	238
ABRI083	238
ABRI090	238
ABRI100	238
ABRI110	238
ABRI115	238
ABRI125	238
ABRI133	238
ABRI140	238
ABRI150	238
ABRI160	238
ABRI180	238
ABRI200	238
ABRI220	238
ABRI250	238
ABRI280	238
ABRI300	238
ABRI315	238
ABRI355	238
ABRI400	238
ABRI450	238
ABRI500	238
ABRI560	238
ABRI600	238
ABRI630	238
ABRI710	238
ABRI800	238
ABRI900	238
ABRI910	238
ABRI911	238
ABRI912	238
ABRIA2018	239
ABRIA2022	239
ABRIA2028	239
ABRIA2035	239
ABRIA2040	239
ABRIA2048	239
ABRIA2054	239
ABRIA2060	239
ABRIA2075	239
ABRIA2090	239
ABRIA2110	239
ABRIA2115	239
ABRIA2125	239
ABRIA2140	239
ABRIA2160	239
ABRIA4018	239
ABRIA4022	239
ABRIA4028	239
ABRIA4035	239
ABRIA4040	239
ABRIA4048	239
ABRIA4054	239
ABRIA4060	239
ABRIA4075	239
ABRIA4090	239
ABRIA4110	239
ABRIA4115	239
ABRIA4125	239
ABRIA4140	239
ABRIA4160	239
ABRID016	240
ABRID020	240
ABRID025	240
ABRID032	240
ABRID040	240
ABRID050	240
ABRID063	240
ABRID075	240
ABRID090	240
ABRID110	240
ABRID125	240
ABRID140	240
ABRID160	240
ABRT3509	152
ABRT3513	152
ABRT3516	152
ABRT3519	152
ABRT3913	152
ABRT3916	152
ABRT3919	152
ABRT3925	152
ABRT4213	152
ABRT4216	152
ABRT4219	152
ABRT4225	152
ABRT4232	152
ABRT4238	152
ABRT4250	152
ABRT4810	152
ABRT4811	152
ABRT4812	152
ABRT4813	152
ABRT4816	152
ABRT4819	152
ABRT4825	152
ABRT4832	152
ABRT4838	152
ABRT4845	152
ABRT4850	152
ABRT4860	152
ABRT4880	152
ABRT4890	152
ABRT5519	152
ABRT5525	152
ABRT5532	152
ABRT5538	152
ABRT5560	152
ABRT5573	152
ABSA050100	245
ABSA050125	245
ABSA050200	245
ABSA050300	245
ABSA050400	245
ABSA050500	245
ABSA050600	245
ABSA100100	245
ABSA100125	245
ABSA100200	245
ABSA100300	245
ABSA100400	245
ABSA100500	245
ABSI003	256
ABSI004	256
ABSI005	256
ABSI006	256
ABSI007	256
ABSI008	256
ABSI009	256
ABSI010	256
ABSI011	256
ABSI012	256
ABSI013	256
ABSI014	256
ABSI015	256
ABSI016	256
ABSI017	256
ABSI018	256
ABSI019	256
ABSI020	256
ABSI021	256
ABSI022	256
ABSI025	256
ABTA0630	313
ABTA0640	313
ABTA0650	313
ABTA0730	313
ABTA0740	313
ABTA0750	313
ABTA0760	313
ABTA0770	313
ABTA0780	313
ABTA0840	313
ABTA0860	313
ABTA0880	313
ABTA1050	313
ABTA1070	313
ABTA1090	313
ABTA20630	314
ABTAB0630	313
ABTAB0640	313
ABTAB0650	313
ABTC020	279
ABTC025	279
ABTD016	279
ABTD018	279
ABTD020	279
ABTD022	279
ABTD025	279
ABTD028	279
ABTG4530	314
ABTG4535	314
ABTG4540	314
ABTG5030	314
ABTG5040	314
ABTO06015	256
ABTR05030	314
ABTR05040	314
ABTR05050	314
ABTR05060	314
ABTR06040	314
ABTR06050	314
ABTR06060	314
ABTS014	279
ABTS016	279
ABTS018	279
ABTS020	279
ABTS022	279
ABTS025	279
ABTS028	279
ABTS032	279
ACHA08C	61
ACHA09C	61
ACHA10C	61
ACHA11C	61
ACHA12C	61
ACHA14C	61
ACHA16C	61
ACHAA208C	61
ACHAA210C	61
ACHAA212C	61
ACHAFO08C	61
ACHAFO10C	61
ACHAFO12C	61
ACHE08C	59
ACHE09C	59
ACHE10C	59
ACHE10L	59
ACHE11C	59
ACHE11L	59
ACHE12C	59
ACHE12L	59
ACHE14C	59
ACHE14L	59
ACHG08C	60
ACHG09C	60
ACHG10C	60
ACHG11C	60
ACHG12C	60
ACHG14C	60
ACHG16C	60
ACHGA208C	60
ACHGA210C	60
ACHGA212C	60
ACHGE10	60
ACHGE12	60
ACHGFO08C	60
ACHGFO10C	60
ACHGFO12C	60
ACHINB08C	59
ACHINB08L	59
ACHINB10C	59
ACHINB10L	59
ACHINN08C	59
ACHINN08L	59
ACHINN10C	59
ACHINN10L	59
ACHT08C	57
ACHT08L	57
ACHT09C	57
ACHT09L	57
ACHT10C	57
ACHT10L	57
ACHT11C	57
ACHT11L	57
ACHT12C	57
ACHT12L	57
ACHT14C	57
ACHT14L	57
ACHT16C	57
ACHT16L	57
ACHT20C	57
ACHT25C	57
ACHT8808C	58
ACHT8808E	58
ACHT8808L	58
ACHT8810C	58
ACHT8810E	58
ACHT8810L	58
ACHT8812C	58
ACHT8812L	58
ACHT8816C	58
ACHT8816L	58
ACHT8820C	58
ACHTA208C	57
ACHTA208L	57
ACHTA209C	57
ACHTA209L	57
ACHTA210C	57
ACHTA210L	57
ACHTA211C	57
ACHTA211L	57
ACHTA212C	57
ACHTA212L	57
ACHTA214C	57
ACHTA214L	57
ACHTA216C	57
ACHTA216L	57
ACHTA220C	57
ACHTPI08C	58
ACHTPI08L	58
ACHTPI10C	58
ACHTPI10L	58
ACHTPI12C	58
ACHTPI12L	58
ACHTPL08C	58
ACHTPL08L	58
ACHTPL10C	58
ACHTPL10L	58
ACHTPL12C	58
ACHTPL12L	58
ADUTC47	128
ADUTC60	128
AFAZ144819	184
AFAZ144828	184
AFAZ144835	184
AFBL144819	185
AFBL144828	185
AFBL144835	185
AFGR144819	185
AFGR144828	185
AFGR144835	185
AFMC144819	184
AFMC144828	184
AFMC144835	184
AFMD144819	184
AFMD144828	184
AFMD144835	184
AFNE144819	185
AFNE144828	185
AFNE144835	185
AFPG144819	184
AFPG144828	184
AFPG144835	184
AFRD144819	183
AFRD144828	183
AFRD144835	183
AFRT144819	183
AFRT144828	183
AFRT144835	183
AFVE144819	184
AFVE144828	184
AFVE144835	184
AFZN144819	183
AFZN144828	183
AFZN144835	183
AGP023025	245
AGP026028	245
AGP029031	245
AGP032035	245
AGP036039	245
AGP040043	245
AGP044047	245
AGP048051	245
AGP052055	245
AGP056059	245
AGP060063	245
AGP064067	245
AGP068073	245
AGP074079	245
AGP080085	245
AGP086091	245
AGP092097	245
AGP098103	245
AGP104112	245
AGP113121	245
AGP122130	245
AGP131139	245
AGP140148	245
AGP149161	245
AGP162174	245
AH06060	43
AH06070	43
AH06080	43
AH06090	43
AH06100	43
AH06110	43
AH06120	43
AH06130	43
AH06140	43
AH06150	43
AH06160	43
AH06170	43
AH06180	43
AH08060	43
AH08075	43
AH08090	43
AH08100	43
AH08115	43
AH08120	43
AH08130	43
AH08155	43
AH10070	43
AH10080	43
AH10090	43
AH10100	43
AH10120	43
AH10140	43
AH10150	43
AH10160	43
AH10170	43
AH10210	43
AH10230	43
AH12090	43
AH12100	43
AH12110	43
AH12120	43

Ref.	page
AH12130	43
AH12140	43
AH12160	43
AH12180	43
AH12200	43
AH12220	43
AH12250	43
AH14120	43
AH14145	43
AH14170	43
AH14220	43
AH14250	43
AH16125	43
AH16145	43
AH16170	43
AH16220	43
AH16250	43
AH16280	43
AH20170	43
AH20220	43
AH20270	43
AHIAR0645	69
AHIAR0855	69
AHIAR1065	69
AHIAR1275	69
AHIAR1690	69
AHICA0645	69
AHICA0855	69
AHICA1065	69
AHICA1275	69
AHICA1690	69
AHICI0645	69
AHICI0855	69
AHICI1065	69
AHIGA0645	69
AHIGA0855	69
AHIGA1065	69
AHIGA1275	69
AHIGA1690	69
AHITO0645	69
AHITO0855	69
AHITO1065	69
AHITO1275	69
AHITO1690	69
AIS08080	102
AIS08100	102
AIS08120	102
AIS08140	102
AISAM085	103
AISC10070	102
AISC10090	102
AISC10100	102
AISC10110	102
AISC10120	102
AISC10130	102
AISC10140	102
AISC10160	102
AISC10180	102
AISC10200	102
AISC10220	102
AISC10260	102
AISM08090	103
AISM08110	103
AISM08120	103
AISM08140	103
AISM08170	103
AISM08200	103
AISM08250	103
AISM08300	103
AISR140	102

Ref.	page
AISS10070	102
AISS10090	102
AISS10100	102
AISS10120	102
AISS10140	102
AISS10160	102
AISS10180	102
AISS10200	102
AISS10220	102
AISS10260	102
AISW060	103
ALHA14025	191
ALHA16030	191
ALHA17040	191
ALHA18040	191
ALHA18050	191
ALHA19050	191
ALHA19060	191
ALHA19070	191
ALHA20050	191
ALHA20060	191
ALHA20070	191
ALHA20080	191
ALHA21070	191
ALHA21080	191
ALHA21090	191
ALHA21100	191
ALHA22110	191
ALHA22120	191
ALHA23130	191
ALHAB16030	191
ALHAB17040	191
ALHAB18050	191
ALHAB19060	191
ALHC14025	190
ALHC16030	190
ALHC17040	190
ALHC18040	190
ALHC18050	190
ALHC19050	190
ALHC19060	190
ALHC19070	190
ALHC20050	190
ALHC20060	190
ALHC20070	190
ALHC20080	190
ALHC21070	190
ALHC21080	190
ALHC21090	190
ALHC21100	190
ALHC22110	190
ALHC22120	190
ALHC23130	190
ALHCB16030	190
ALHCB17040	190
ALHCB18050	190
ALHCB19060	190
ALPL45060	188
ALPL45080	188
ALPL45100	188
ALPL50120	188
ALRE20015	188
ALRE25020	188
ALRE25025	188
ALRE25030	188
ALRE35040	188
ALRE35050	188
ALRE40060	188
ALRE40070	188
ALRE40080	188

Ref.	page
ALRO14025	189
ALRO16030	189
ALRO17040	189
ALRO18040	189
ALRO18050	189
ALRO19050	189
ALRO19060	189
ALRO19070	189
ALRO20060	189
ALRO20070	189
ALRO20080	189
ALRO21080	189
ALRO21090	189
ALRO22100	189
ALRO22110	189
ALRO22120	189
ALRO23130	189
ALROB16030	189
ALROB17040	189
ALROB18050	189
ALROB19060	189
AM06045	46
AM06055	46
AM06060	46
AM06065	46
AM06070	46
AM06080	46
AM06085	46
AM06090	46
AM06100	46
AM06110	46
AM06120	46
AM06130	46
AM06140	46
AM06150	46
AM06160	46
AM06170	46
AM06180	46
AM08050	46
AM08060	46
AM08065	46
AM08075	46
AM08090	46
AM08115	46
AM08120	46
AM08130	46
AM08155	46
AM10065	46
AM10070	46
AM10080	46
AM10090	46
AM10100	46
AM10120	46
AM10140	46
AM10150	46
AM10160	46
AM10170	46
AM10210	46
AM10230	46
AM12075	46
AM12080	46
AM12090	46
AM12100	46
AM12110	46
AM12120	46
AM12140	46
AM12160	46
AM12180	46
AM12220	46
AM12250	46

Ref.	page
AM14080	46
AM14100	46
AM14120	46
AM14145	46
AM14170	46
AM14220	46
AM14250	46
AM16090	46
AM16110	46
AM16125	46
AM16145	46
AM16170	46
AM16220	46
AM16250	46
AM16280	46
AM20120	47
AM20170	47
AM20220	47
AM20270	47
AM24180	47
AM24260	47
ANCLA40	110
ANCLA47	110
ANCU06040	65
ANCU06070	65
ANFA2309	71
ANFA2312	71
ANFA2316	71
ANFA2319	71
ANFA2323	71
ANFA2330	71
ANFA2335	71
ANFA5114	71
ANFA5116	71
ANFA5120	71
ANFA5124	71
ANFATA37B	71
ANFATA70B	71
ANFAZ5021	71
AP08050	41
AP08075	41
AP08095	41
AP08115	41
AP10090	41
AP10105	41
AP10115	41
AP10135	41
AP10165	41
AP10185	41
AP12080	41
AP12100	41
AP12110	41
AP12120	41
AP12130	41
AP12150	41
AP12180	41
AP12200	41
AP16145	41
AP16175	41
AP16220	41
AP16250	41
AP20170	41
AP20200	41
AP24205	41
AP24235	41
APA408075	41
APA408095	41
APA408115	41
APA408135	41
APA410090	41

Ref.	page
APA410105	41
APA410115	41
APA410135	41
APA410165	41
APA410185	41
APA412110	41
APA412120	41
APA412130	41
APA412150	41
APA412180	41
APA412200	41
APA416125	41
APA416145	41
APA416175	41
APA416190	41
APA416220	41
APA420200	41
APA420240	41
APA420285	41
APAR070	205
APAR150	205
APAT071	205
APAT091	205
APAT101	205
APEN71	206
APEN91	206
APFL801020	205
APFUZ100	205
APG06060	42
APG06070	42
APG06100	42
APG08050	42
APG08060	42
APG08075	42
APG08095	42
APG08115	42
APG10070	42
APG10090	42
APG10105	42
APG10115	42
APG10135	42
APG10165	42
APG10185	42
APG12080	42
APG12110	42
APG12130	42
APG12150	42
APG12180	42
APG12200	42
APG16125	42
APG16145	42
APG16175	42
APG16220	42
APG20170	42
APG20200	42
APPD100	205
APPG070	206
APPG100	206
APPT071	206
APPT091	206
APPT101	206
APSB71	206
APSB91	206
APUEZ200	206
APX08050	42
APX08075	42
APX08080	42
APX08095	42
APX08115	42
APX10090	42

Ref.	page
APX10105	42
APX10115	42
APX10135	42
APX10165	42
APX10185	42
APX12080	42
APX12100	42
APX12110	42
APX12120	42
APX12130	42
APX12150	42
APX12180	42
APX12200	42
APX12220	42
APX12255	42
APX16145	42
APX16175	42
APX16220	42
APX16250	42
APX20170	42
APX20200	42
ARANE14	148
ARANE16	148
ARANE18	148
ARANE25	148
ARE164816	146
ARE164819	146
ARE165522	146
ARE166320	146
ARE166325	146
ARE166332	146
ARE166338	146
ARE166350	146
ARE4816	145
ARE4819	145
ARE5522	145
ARE6320	145
ARE6325	145
ARE6332	145
ARE6338	145
ARE6350	145
ARE6363	145
ARE6380	145
ARFOM06Z	312
ARFOM08Z	312
ARFOM10Z	312
ARFOM12Z	312
ARFOM16Z	312
ARINO14	148
ARINO16	148
ARINO18	148
ARINO25	148
ARINOM30	148
ARSP08	302
ARSP10	302
ARSS10	302
ARSS12	302
ASF008016	257
ASF012022	257
ASF016027	257
ASF020032	257
ASF025040	257
ASF030045	257
ASF035050	257
ASF040060	257
ASF050070	257
ASF060080	257
ASF070090	257
ASF080100	257
ASF090110	257

Ref.	page
ASF100120	257
ASF110130	257
ASF120140	257
ASF130150	257
ASF2010016	257
ASF2012020	257
ASF2016027	257
ASF2020032	257
ASF2025040	257
ASF2032050	257
ASF2040060	257
ASF2050070	257
ASF2060080	257
ASF2070090	257
ASF2080100	257
ASF2090110	257
ASF2100120	257
ASF2110130	257
ASF2120140	257
ASF2130150	257
ASFIR03	258
ASFIR30	258
ASFIRCA	258
ATA4832	154
ATA4838	154
ATA4845	154
ATA4850	154
ATA5538	154
ATA5545	154
ATA5550	154
ATA5555	154
ATA5565	154
ATA6310	154
ATA6350	154
ATA6360	154
ATA6370	154
ATA6385	154
ATAPO08AR	148
ATAPO08BO	148
ATAPO08BP	148
ATAPO08NE	148
ATAPO08RC	148
ATAPO08RT	148
ATAPO08VN	148
ATAPO10AR	148
ATAPO10BO	148
ATAPO10BP	148
ATAPO10NE	148
ATAPO10RC	148
ATAPO10RT	148
ATAPO10VN	148
AUE166319	146
AUE166325	146
AUE166332	146
AUE166340	146
AUE166350	146
AUE166360	146
AUE166380	146
AUE186310	146
AUE186311	146
AUE186312	146
AUE186313	146
AUE186314	146
AUE186315	146
AUE186325	146
AUE186332	146
AUE186340	146
AUE186350	146
AUE186360	146
AUE186380	146

Ref.	page
AUE256325	146
AUE6310	146
AUE6311	146
AUE6312	146
AUE6313	146
AUE6314	146
AUE6315	146
AUE6319	146
AUE6325	146
AUE6332	146
AUE6340	146
AUE6350	146
AUE6360	146
AUE6380	146
AUTO16532	144
AUTO16538	144
AUTO532	144
AUTO538	144
AVC08120	70
AVC08150	70
AVC10120	70
AVC10150	70
AVC10180	70
AVR08120	70
AVR08150	70
AVR10120	70
AVR10150	70
AVR10180	70
AZA2060500	244
AZA2060750	244
AZA2061000	244
AZA2061250	244
AZA2081500	244
AZA2082000	244
AZA2082500	244
AZA2083000	244
AZA2104000	244
AZA2106000	244
AZA2108000	244
AZAMA06	67
AZAMA08	67
AZAMA10	67
AZAMA12	67
AZAMAFO06	67
AZAMAFO08	67
AZAMAFO10	67
AZAMAFO12	67
AZAMC06	66
AZAMC08	66
AZAMC10	66
AZAMC12	66
AZAMC16	66
AZAME06	67
AZAME08	67
AZAME10	67
AZAME12	67
AZAME16	67
AZAMG06	67
AZAMG08	67
AZAMG10	67
AZAMG12	67
AZAMGFO06	67
AZAMGFO08	67
AZAMGFO10	67
AZAMGFO12	67
AZAMT06	66
AZAMT08	66
AZAMT10	66
AZAMT12	66
AZAMT16	66

Ref.	page
AZIM060250	244
AZIM060375	244
AZIM060500	244
AZIM060750	244
AZIM061000	244
AZIM061250	244
AZIM081500	244
AZIM082000	244
AZIM082250	244
AZIM082500	244
AZIM083000	244
AZIM083500	244
AZIM084000	244
AZIM084500	244
AZIM085000	244
AZIM086000	244
AZIM103000	244
AZIM103500	244
AZIM104000	244
AZIM105000	244
AZIM106000	244
AZIM108000	244
BAESM04	106
BAESM05	106
BAESM06	106
BAESM08	106
BAGAM04	106
BAGAM05	106
BAGAM06	106
BAGAM08	106
BAUTO165510	145
BAUTO165540	145
BAUTO165550	145
BAUTO165565	145
BAUTO165580	145
BAUTO5510	145
BAUTO5540	145
BAUTO5550	145
BAUTO5565	145
BAUTO5580	145
BB12100	272
BB12225	272
BB12500	272
BB12720	272
BB12850	272
BB25080	272
BB25100	272
BB25140	272
BB25160	272
BB25200	272
BB36140	272
BB36200	272
BB36250	272
BB36300	272
BB36370	272
BB48120	272
BB48160	272
BB48180	272
BB48200	272
BB48250	272
BB48290	272
BB48370	272
BB48430	272
BB76150	272
BB76200	272
BB76290	272
BB76370	272
BB76450	272
BB76540	272
BB88770	272

Ref.	page
BBANA19	274
BBANA27	274
BBANE19	274
BBANE27	274
BC25100AM	275
BC25100AZ	275
BC25100GR	273
BC25100MA	275
BC25100RO	275
BC25100VE	274
BC36140AM	275
BC36140AZ	275
BC36140GR	273
BC36140MA	275
BC36140RO	275
BC36140VE	274
BC36200AM	275
BC36200AZ	275
BC36200GR	273
BC36200MA	275
BC36200RO	275
BC36200VE	274
BC48200AM	275
BC48200AZ	275
BC48200GR	273
BC48200MA	275
BC48200RO	275
BC48200VE	274
BC48290AM	275
BC48290AZ	275
BC48290GR	273
BC48290MA	275
BC48290RO	275
BC48290VE	274
BCPA24214	155
BCPA24223	155
BCPB4214	155
BCPB4223	155
BCPN4214	155
BCPN4223	155
BCPZ4214	155
BCPZ4214BL	155
BCPZ4223	155
BCPZ4223BL	155
BHDS06110	226
BHDS06160	226
BHDS06210	226
BHDS08110	226
BHDS08160	226
BHDS08210	226
BHDS10160	226
BHDS10210	226
BHDS12160	226
BHDS12210	226
BHDS16210	226
BHDS16310	226
BID25110	274
BID25210	274
BIE164825	144
BIE165525	144
BIE165532	144
BIE165538	144
BIE165550	144
BIE165558	144
BIE165565	144
BIE165580	144
BIE166325	144
BIE4825	144
BIE5525	144
BIE5532	144

Ref.	page
BIE5538	144
BIE5550	144
BIE5558	144
BIE5565	144
BIE5580	144
BIE6325	144
BN12100	271
BN12225	271
BN12500	271
BN12720	271
BN12850	271
BN25080	271
BN25100	271
BN25140	271
BN25160	271
BN25200	271
BN36140	271
BN36200	271
BN36250	271
BN36300	271
BN36370	271
BN48120	271
BN48160	271
BN48180	271
BN48200	271
BN48250	271
BN48290	271
BN48370	271
BN48430	271
BN76150	271
BN76200	271
BN76290	271
BN76370	271
BN76450	271
BN76540	271
BN88770	271
BNDT25100	273
BNDT36150	273
BNDT36200	273
BNDT48200	273
BNDT48300	273
BNDT48370	273
BNDT76370	273
BOCA006	228
BOCA007	228
BOCA008	228
BOCA010	228
BPL02616	274
BZ125IM04	221
BZ125IM05	221
BZ125IM06	221
BZ125IM08	221
BZ125IM10	221
BZ125ZM03	221
BZ125ZM04	221
BZ125ZM05	221
BZ125ZM06	221
BZ125ZM08	221
BZ125ZM10	221
BZ125ZM12	221
BZ12703	223
BZ12704	223
BZ12705	223
BZ12706	223
BZ12708	223
BZ12710	223
BZ12712	223
BZ158704	220
BZ158705	220
BZ158706	220

Ref.	page
BZ158708	220
BZ158710	220
BZ158712	220
BZ3I04010	210
BZ3I04016	210
BZ3I04020	210
BZ3I04030	210
BZ3I04040	210
BZ3I05010	210
BZ3I05016	210
BZ3I05020	210
BZ3I05025	210
BZ3I05030	210
BZ3I05040	210
BZ3I05050	210
BZ3I06016	210
BZ3I06020	210
BZ3I06025	210
BZ3I06030	210
BZ3I06040	210
BZ3I06050	210
BZ3I08016	210
BZ3I08020	210
BZ3I08025	210
BZ3I08030	210
BZ3I08040	210
BZ3I08050	210
BZ3I08060	210
BZ3I10020	210
BZ3I10030	210
BZ3I10040	210
BZ3Z04008	209
BZ3Z04010	209
BZ3Z04012	209
BZ3Z04016	209
BZ3Z04020	209
BZ3Z04025	209
BZ3Z04030	209
BZ3Z04035	209
BZ3Z04040	209
BZ3Z04045	209
BZ3Z04050	209
BZ3Z04060	209
BZ3Z05010	209
BZ3Z05012	209
BZ3Z05015	209
BZ3Z05016	209
BZ3Z05020	209
BZ3Z05025	209
BZ3Z05030	209
BZ3Z05035	209
BZ3Z05040	209
BZ3Z05045	209
BZ3Z05050	209
BZ3Z05060	209
BZ3Z06016	209
BZ3Z06020	209
BZ3Z06025	209
BZ3Z06030	209
BZ3Z06040	209
BZ3Z06050	209
BZ3Z06060	209
BZ3Z06070	209
BZ3Z08016	209
BZ3Z08020	209
BZ3Z08025	209
BZ3Z08030	209
BZ3Z08040	209
BZ3Z08050	209
BZ3Z08060	209

Ref.	page
BZ3Z08070	209
BZ3Z08080	209
BZ3Z10030	209
BZ3Z10040	209
BZ3Z10050	209
BZ603905020	214
BZ603905030	214
BZ603905040	214
BZ603905050	214
BZ603906016	214
BZ603906020	214
BZ603906030	214
BZ603906040	214
BZ603906050	214
BZ603906060	214
BZ603906070	214
BZ603906080	214
BZ603908025	214
BZ603908030	214
BZ603908040	214
BZ603908050	214
BZ603908060	214
BZ603908070	214
BZ603908080	214
BZ603908090	214
BZ603910025	214
BZ603910030	214
BZ603910040	214
BZ603910050	214
BZ902103	222
BZ902104	222
BZ902105	222
BZ902106	222
BZ902108	222
BZ902110	222
BZ902112	222
BZ9021IM04	222
BZ9021IM05	222
BZ9021IM06	222
BZ9021IM08	222
BZ9021IM10	222
BZ93106030	211
BZ93106040	211
BZ93106050	211
BZ93106060	211
BZ93106070	211
BZ93108030	211
BZ93108040	211
BZ93108050	211
BZ93108060	211
BZ93108070	211
BZ93108080	211
BZ934IM04	218
BZ934IM05	218
BZ934IM06	218
BZ934IM08	218
BZ934IM10	218
BZ934ZM03	218
BZ934ZM04	218
BZ934ZM05	218
BZ934ZM06	218
BZ934ZM08	218
BZ934ZM10	218
BZ934ZM12	218
BZ985IM04	219
BZ985IM05	219
BZ985IM06	219
BZ985IM08	219
BZ985IM10	219
BZABE144819	143
BZABE144825	143
BZABE164819	143
BZABE165522	143
BZABE165525	143
BZABE165532	143
BZABE165538	143
BZABE165550	143
BZABE166325	143
BZABE166332	143
BZABE166338	143
BZABE3509	142
BZABE3513	142
BZABE4213	142
BZABE4216	142
BZABE4219	142
BZABE4225	142
BZABE4813	142
BZABE4816	142
BZABE4819	142
BZABE4825	142
BZABE4832	142
BZABE4838	142
BZABE5519	142
BZABE5522	142
BZABE5525	142
BZABE5532	142
BZABE5538	142
BZABE5550	142
BZABE6325	142
BZABE6332	142
BZABE6338	142
BZABE6350	142
BZABP3513	153
BZABP3516	153
BZABP4219	153
BZABP4225	153
BZABP4232	153
BZABPI016	255
BZABPI018	255
BZABPI020	255
BZABPI022	255
BZABPI025	255
BZABPI028	255
BZABPI032	255
BZABR3509	150
BZABR3513	150
BZABR3516	150
BZABR4213	150
BZABR4216	150
BZABR4219	150
BZABR4225	150
BZABR4232	150
BZABR4816	150
BZABR4819	150
BZABR4825	150
BZABR4832	150
BZABR4838	150
BZABR4845	150
BZABR4850	150
BZABR4860	150
BZACHA08C	61
BZACHA10C	61
BZACHA12C	61
BZACHG08C	60
BZACHG10C	60
BZACHG12C	60
BZACHINB08C	59
BZACHINB10C	59
BZACHT08C	57
BZACHT08L	57
BZACHT10C	57
BZACHT10L	57
BZACHT12C	57
BZACHT12L	57
BZACHTA208C	57
BZACHTA208L	57
BZACHTA210C	57
BZACHTA210L	57
BZAGP023025	245
BZAGP029031	245
BZAGP040043	245
BZALHA14025	191
BZALHA16030	191
BZALHA17040	191
BZALHA18040	191
BZALHA18050	191
BZALHA19050	191
BZALHA19060	191
BZALHA19070	191
BZALHA20060	191
BZALHA20070	191
BZALHA20080	191
BZALHA21080	191
BZALHA21090	191
BZALHA21100	191
BZALHA22110	191
BZALHA22120	191
BZALHA23130	191
BZALHAB1630	191
BZALHAB1740	191
BZALHAB1850	191
BZALHAB1960	191
BZALHAT04	98
BZALHAT05	98
BZALHAT06	98
BZALHAT08	98
BZALHATS05	97
BZALHATS06	97
BZALHATS08	97
BZALHC14025	190
BZALHC16030	190
BZALHC17040	190
BZALHC18040	190
BZALHC18050	190
BZALHC19050	190
BZALHC19060	190
BZALHC19070	190
BZALHC20060	190
BZALHC20070	190
BZALHC20080	190
BZALHC21080	190
BZALHC21090	190
BZALHC21100	190
BZALHC22110	190
BZALHC22120	190
BZALHC23130	190
BZALHCB1630	190
BZALHCB1740	190
BZALHCB1850	190
BZALHCB1960	190
BZALHCT04	98
BZALHCT05	98
BZALHCT06	98
BZALHCT08	98
BZALHCTS05	97
BZALHCTS06	97
BZALHCTS08	97
BZALPL45060	188
BZALPL45080	188
BZALPL45100	188
BZALPL50120	188
BZALRE20015	188
BZALRE25020	188
BZALRE25025	188
BZALRE25030	188
BZALRE35040	188
BZALRE35050	188
BZALRE40060	188
BZALRE40070	188
BZALRE40080	188
BZALRO14025	189
BZALRO16030	189
BZALRO17040	189
BZALRO18040	189
BZALRO18050	189
BZALRO19050	189
BZALRO19060	189
BZALRO19070	189
BZALRO20060	189
BZALRO20070	189
BZALRO21080	189
BZALRO21090	189
BZALRO22100	189
BZALRO22110	189
BZALRO22120	189
BZALRO23130	189
BZALROB1630	189
BZALROB1740	189
BZALROB1850	189
BZALROB1960	189
BZALROT04	98
BZALROT05	98
BZALROT06	98
BZALROT08	98
BZALROTS05	97
BZALROTS06	97
BZALROTS08	97
BZAM06060	47
BZAM06080	47
BZAM08050	47
BZAM08075	47
BZAM08090	47
BZAM10070	47
BZAM10090	47
BZAM10120	47
BZAM12090	47
BZAM12110	47
BZAM12140	47
BZANCLA40	110
BZANCLA47	110
BZARANE14	148
BZARANE16	148
BZARANE18	148
BZASF008016	257
BZASF012022	257
BZASF016027	257
BZASF020032	257
BZASF025040	257
BZBAESM04	106
BZBAESM05	106
BZBAESM06	106
BZBAGAM04	106
BZBAGAM05	106
BZBAGAM06	106
BZBB25100	272
BZBB25160	272
BZBB25200	272
BZBB36140	272
BZBB36200	272
BZBB36300	272
BZBB48160	272
BZBB48200	272
BZBB48290	272
BZBB48370	272
BZBN25100	271
BZBN25160	271
BZBN25200	271
BZBN36140	271
BZBN36200	271
BZBN36300	271
BZBN48160	271
BZBN48200	271
BZBN48290	271
BZBN48370	271
BZBOCA008	228
BZBOCA010	228
BZCFBL	194
BZGDZ03	121
BZGDZ04	121
BZGDZ05	121
BZGDZ06	121
BZGMZ08012	194
BZGMZ10016	194
BZGMZ12020	194
BZGMZ15026	194
BZGMZ17030	194
BZGMZ19035	194
BZGRB001	281
BZGRB010	281
BZGRB050	281
BZGRB060	281
BZGRB070	281
BZGRB080	281
BZGRB090	281
BZGRB100	281
BZGRB120	281
BZGRZ05	120
BZGRZ06	120
BZGRZ08	120
BZGRZ10	120
BZHARM03026	192
BZHARM04035	192
BZHARM05037	192
BZHARM06050	192
BZHARM08060	192
BZHCRM03026	192
BZHCRM04035	192
BZHCRM05037	192
BZHCRM06050	192
BZHCRM08060	192
BZHCRM10065	192
BZHENOM06	64
BZHENOM08	64
BZHENOM10	64
BZINCO432	108
BZINCO438	108
BZINCO537	108
BZINCO552	108
BZINCO565	108
BZINCO637	108
BZINCO652	108
BZINVN7060	182
BZINVN7070	182
BZINVN7080	182
BZINVZ7060	181
BZINVZ7070	181
BZINVZ7080	181
BZMAE0630	311
BZMAE0825	311
BZMAE1030	311
BZMEDUB06	98
BZMEDUB08	98
BZMEDUB10	98
BZMI08075	45
BZMI10090	45
BZPACC15015	193
BZPACC15020	193
BZPACC15025	193
BZPACC20025	193
BZPACC20030	193
BZPACC20035	193
BZPACC20040	193
BZPACC20045	193
BZPACC20050	193
BZPACP22520	193
BZPACP22525	193
BZPACP22530	193
BZPACP25040	193
BZPACP25050	193
BZPACP29060	193
BZPACP29070	193
BZPACP34040	193
BZPACP34050	193
BZPACP34060	193
BZPACP34070	193
BZPACX11010	194
BZPACX13012	194
BZPACX13020	194
BZPACX15016	194
BZPACX15025	194
BZPACX18030	194
BZPAESM04	107
BZPAESM05	107
BZPAESM06	107
BZPAGAM04	107
BZPAGAM05	107
BZPAGAM06	107
BZPL35025	124
BZPL35035	124
BZPL35045	124
BZPUPHCL01	226
BZPUPHCL02	226
BZPUPHCL03	226
BZPUPOCL01	227
BZPUPOCL02	227
BZPUPOCL03	227
BZPUTOT01	226
BZPUTOT02	226
BZRECA4010	113
BZRECA4012	113
BZRECA4016	113
BZRECA4810	113
BZRECA4812	113
BZRECA4814	113
BZRECA4816	113
BZRECA4818	113
BZREFL4835	114
BZRENO3208	112
BZRENO3210	112
BZRENO4008	112
BZRENO4010	112
BZRENO4012	112
BZRENO4016	112
BZRENO4810	112
BZRENO4812	112
BZRENO4816	112
BZRENO4820	112
BZRENO4824	112
BZSJZ0403	118
BZSJZ0505	118

Ref.	page
BZSJZ0506	118
BZSJZ0608	118
BZSVCBL	195
BZSVCMA	195
BZSVNB01	195
BZSVNB02	195
BZSVNM01	195
BZSVNM02	195
BZT8135009	157
BZT8135013	157
BZT8135016	157
BZT8135019	157
BZT8139013	157
BZT8139016	157
BZT8139019	157
BZT8139025	157
BZT8139032	157
BZT8142009	157
BZT8142013	157
BZT8142016	157
BZT8142019	157
BZT8142025	157
BZT8142032	157
BZT8142038	157
BZT8148016	157
BZT8148019	157
BZT8148025	157
BZT8148032	157
BZT8148038	157
BZT8148050	157
BZT8148060	157
BZT8155025	157
BZT8155032	157
BZT8155038	157
BZT8155050	157
BZT8242019	158
BZT8242025	158
BZT8248025	158
BZT8248038	158
BZT9650410Z	217
BZT9650420Z	217
BZT9650430Z	217
BZT9650510Z	217
BZT9650520Z	217
BZT9650525Z	217
BZT9650530Z	217
BZT9650620Z	217
BZT9650630Z	217
BZT9650640Z	217
BZT9850306Z	216
BZT9850310Z	216
BZT9850316Z	216
BZT9850320Z	216
BZT9850330Z	216
BZT9850416Z	216
BZT9850420Z	216
BZT9850430Z	216
BZT9850510Z	216
BZT9850520Z	216
BZT9850525Z	216
BZT9850530Z	216
BZT9850540Z	216
BZT9850610Z	216
BZT9850616Z	216
BZT9850620Z	216
BZT9850625Z	216
BZT9850630Z	216
BZT9850640Z	216
BZT9850650Z	216
BZT9850660Z	216

Ref.	page
BZTABRIBL8	273
BZTABRINE8	272
BZTACON04	99
BZTACON05	99
BZTACON06	99
BZTACON08	99
BZTACON10	99
BZTACON12	99
BZTALAM06	65
BZTALAM08	65
BZTALAM10	65
BZTAME06032	65
BZTAME08038	65
BZTAME08060	65
BZTAME10060	65
BZTAPLAME	110
BZTAPLANY	110
BZTB05030	180
BZTB05040	180
BZTB05050	180
BZTB06030	180
BZTB06040	180
BZTB06050	180
BZTB06060	180
BZTB06070	180
BZTB06080	180
BZTB07050	180
BZTB07060	180
BZTB07070	180
BZTB08040	180
BZTB08050	180
BZTB08060	180
BZTB08070	180
BZTB08080	180
BZTB08090	180
BZTB08100	180
BZTB10050	180
BZTB10060	180
BZTB10080	180
BZTBTS10	97
BZTCCA05030	95
BZTCCA05050	95
BZTCCA06040	95
BZTCCA06050	95
BZTCCA06060	95
BZTCCA06070	95
BZTCCA08060	95
BZTCCA08080	95
BZTCCA08100	95
BZTCCA08120	95
BZTN4S05	96
BZTN4S06	96
BZTN4S08	96
BZTN4S10	96
BZTN4S12	96
BZTNXA08080	91
BZTNXA08100	91
BZTNXA08120	91
BZTNXA10080	91
BZTNXA10100	91
BZTNXA10120	91
BZTNXE08080	91
BZTNXE08100	91
BZTNXE08120	91
BZTNXE10080	91
BZTNXE10100	91
BZTNXE10120	91
BZTPPO25016	175
BZTPPO25020	175
BZTPPO25025	175

Ref.	page
BZTPPO30016	175
BZTPPO30020	175
BZTPPO30025	175
BZTPPO30030	175
BZTPPO35016	175
BZTPPO35020	175
BZTPPO35025	175
BZTPPO35030	175
BZTPPO35035	175
BZTPPO35040	175
BZTPPO35050	175
BZTPPO40016	175
BZTPPO40020	175
BZTPPO40025	175
BZTPPO40030	175
BZTPPO40035	175
BZTPPO40040	175
BZTPPO40045	175
BZTPPO40050	175
BZTPPO40060	175
BZTPPO45030	175
BZTPPO45035	175
BZTPPO45040	175
BZTPPO45045	175
BZTPPO45050	175
BZTPPO45060	175
BZTPPO45070	175
BZTPPO50030	175
BZTPPO50035	175
BZTPPO50040	175
BZTPPO50050	175
BZTPPO50060	175
BZTPPO50070	175
BZTPPO50080	175
BZTPPO50100	175
BZTPPO60040	175
BZTPPO60050	175
BZTPPO60060	175
BZTPPO60070	175
BZTPPO60080	175
BZTPPO60090	175
BZTPPO60100	175
BZTPPOT04	98
BZTPPOT05	98
BZTPPOT06	98
BZTPPOT08	98
BZTPPOTS05	97
BZTPPOTS06	97
BZTPPOTS08	97
BZTPTPADBE	229
BZTPTPADBL	229
BZTPTPADCA	229
BZTPTPADCE	229
BZTPTPADGR	229
BZTPTPADHA	229
BZTPTPADNE	229
BZTPTPADNO	229
BZTPTPADPI	229
BZTPTPADRO	229
BZTPTPADSA	229
BZTRA6050	70
BZTRA6060	70
BZTRA6080	70
BZTRA8070	70
BZTRA8090	70
BZTRA8110	70
BZTRA8130	70
BZTRA8150	70
BZTREPV0550	183
BZTREPV0750	183

Ref.	page
BZTREZ05050	183
BZTREZ07050	183
BZTSGA06	118
BZTUMAM03	224
BZTUMAM04	224
BZTUMAM05	224
BZTUMAM06	224
BZTUMAM08	224
BZTUMAM10	224
BZTUMAM12	224
BZTXA250050	169
BZTXA250060	169
BZTXA250070	169
BZTXBP30016	166
BZTXBP30020	166
BZTXBP30025	166
BZTXBP30030	166
BZTXBP35016	166
BZTXBP35020	166
BZTXBP35025	166
BZTXBP35030	166
BZTXBP35035	166
BZTXBP35040	166
BZTXBP35050	166
BZTXBP40025	166
BZTXBP40030	166
BZTXBP40035	166
BZTXBP40040	166
BZTXBP40045	166
BZTXBP40050	166
BZTXBP40060	166
BZTXBP45030	166
BZTXBP45035	166
BZTXBP45040	166
BZTXBP45045	166
BZTXBP45050	166
BZTXBP45060	166
BZTXBP45070	166
BZTXBP50030	166
BZTXBP50035	166
BZTXBP50040	166
BZTXBP50050	166
BZTXBP50060	166
BZTXBP50070	166
BZTXBP50080	166
BZTXBP60050	166
BZTXBP60060	166
BZTXBP60070	166
BZTXBP60080	166
BZTXZP30016	167
BZTXZP30020	167
BZTXZP30025	167
BZTXZP30030	167
BZTXZP35016	167
BZTXZP35020	167
BZTXZP35025	167
BZTXZP35030	167
BZTXZP35035	167
BZTXZP35040	167
BZTXZP35050	167
BZTXZP40025	167
BZTXZP40030	167
BZTXZP40035	167
BZTXZP40040	167
BZTXZP40045	167
BZTXZP40050	167
BZTXZP40060	167
BZTXZP45030	167
BZTXZP45035	167
BZTXZP45040	167

Ref.	page
BZTXZP45045	167
BZTXZP45050	167
BZTXZP45060	167
BZTXZP45070	167
BZTXZP50030	167
BZTXZP50035	167
BZTXZP50040	167
BZTXZP50050	167
BZTXZP50060	167
BZTXZP50070	167
BZTXZP50080	167
BZTXZP60050	167
BZTXZP60060	167
BZTXZP60070	167
BZTXZP60080	167
BZZ98503	219
BZZ98504	219
BZZ98505	219
BZZ98506	219
BZZ98508	219
BZZ98510	219
BZZ98512	219
CABA004	106
CABA005	106
CABA006	106
CABA008	106
CABTC47	128
CABTC60	128
CAPA004	107
CAPA005	107
CAPA006	107
CAPA008	107
CAQU008	79
CAQU010	79
CAQU012	79
CAQU016	79
CAQU020	79
CAQU024	79
CAQU030	79
CFBL	194
CIPE1208	258
CIPE1708	258
CIPEA21708	258
CIPR1208	259
CIPR1908	259
CKBB12225	272
CKBB25080	272
CKBB25100	272
CKBB25140	272
CKBB25160	272
CKBB25200	272
CKBB36140	272
CKBB36200	272
CKBB36300	272
CKBB36370	272
CKBB48120	272
CKBB48160	272
CKBB48180	272
CKBB48200	272
CKBB48250	272
CKBB48290	272
CKBB48370	272
CKBB76200	272
CKBB76290	272
CKBB76370	272
CKBC25100AZ	275
CKBC25100MA	275
CKBC25100RO	275
CKBC25100VE	274
CKBC36140AZ	275

Ref.	page
CKBC36140MA	275
CKBC36140RO	275
CKBC36140VE	274
CKBC36200AZ	275
CKBC36200MA	275
CKBC36200RO	275
CKBC36200VE	274
CKBC48200AZ	275
CKBC48200MA	275
CKBC48200RO	275
CKBC48200VE	274
CKBC48290AZ	275
CKBC48290MA	275
CKBC48290RO	275
CKBC48290VE	274
CKBN12225	271
CKBN25080	271
CKBN25100	271
CKBN25140	271
CKBN25160	271
CKBN25200	271
CKBN36140	271
CKBN36200	271
CKBN36300	271
CKBN36370	271
CKBN48120	271
CKBN48160	271
CKBN48180	271
CKBN48200	271
CKBN48250	271
CKBN48290	271
CKBN48370	271
CKBN76200	271
CKBN76290	271
CKBN76370	271
CKTACOBRIB6	273
CKTACOBRIB8	273
CKTACOBRIN6	272
CKTACOBRIN8	272
CMBRPOS33	122
CMBRPOS40	122
CMBRPOS42	122
CMBRPOS48	122
CMBRPOS50	122
CMBRPOS60	122
CMBRTEN48	122
CMTAPON33	122
CMTAPON40	122
CMTAPON42	122
CMTAPON48	122
CMTAPON50	122
CMTAPON60	122
CMTAPOS33	122
CMTAPOS40	122
CMTAPOS42	122
CMTAPOS48	122
CMTENSOAL	119
CMTENSOTO	119
CMTENSOVE	119
CMUNAAGUJ	122
COAR08060	240
COAR10060	240
COKS08060	322
COSO15400	322
COSO15450	322
COSO15500	322
COSO20400	322
COSO20450	322
COSO20500	322
CPAC300453	126

Ref.	page
CPAC300703	126
CPGV012	126
CPGV030	126
CPMV020	126
CPMV045	126
CPMV090	126
CPMV150	126
CPPA023	126
CPPA075	126
CPPA150	126
CSB0104010	302
CSB0108010	302
D12503	221
D12504	221
D12505	221
D12506	221
D12508	221
D12510	221
D12512	221
D12514	221
D12516	221
D12518	221
D12520	221
D12522	221
D12524	221
D12527	221
D12530	221
D12533	221
D12536	221
D125IM04	221
D125IM05	221
D125IM06	221
D125IM08	221
D125IM10	221
D125IM12	221
D125IM14	221
D125IM16	221
D125IM18	221
D125IM20	221
D125IM22	221
D125IM24	221
D12703	223
D12704	223
D12705	223
D12706	223
D12708	223
D12710	223
D12712	223
D12714	223
D12716	223
D12718	223
D12720	223
D12722	223
D12724	223
D12727	223
D12730	223
D12736	223
D127IM08	223
D127IM10	223
D127IM12	223
D158704	220
D158705	220
D158706	220
D158708	220
D158710	220
D158712	220
D158714	220
D158716	220
D603905016	214
D603905020	214
D603905025	214
D603905030	214
D603905035	214
D603905040	214
D603905045	214
D603905050	214
D603905060	214
D603905070	214
D603905080	214
D603906016	214
D603906020	214
D603906025	214
D603906030	214
D603906035	214
D603906040	214
D603906045	214
D603906050	214
D603906060	214
D603906070	214
D603906080	214
D603906090	214
D603906100	214
D603906110	214
D603906120	214
D603906130	214
D603906140	214
D603906150	214
D603908016	214
D603908020	214
D603908025	214
D603908030	214
D603908035	214
D603908040	214
D603908045	214
D603908050	214
D603908060	214
D603908070	214
D603908080	214
D603908090	214
D603908100	214
D603908110	214
D603908120	214
D603908130	214
D603908140	214
D603908150	214
D603910020	214
D603910025	214
D603910030	214
D603910035	214
D603910040	214
D603910045	214
D603910050	214
D603910060	214
D603910070	214
D603910080	214
D603910090	214
D603910100	214
D603910110	214
D603910120	214
D603910130	214
D603910140	214
D603910150	214
D603910160	214
D603910180	214
D603910200	214
D603912030	214
D603912035	214
D603912040	214
D603912045	214
D603912050	214
D603912060	214
D603912070	214
D603912080	214
D603912100	214
D603912120	214
D603912140	214
D603912160	214
D603912180	214
D603912200	214
D603912220	214
D603912240	214
D603912260	214
D603912280	214
D603912300	214
D603108016	215
D60810035	215
D60810040	215
D60810045	215
D60810050	215
D60810060	215
D60811040	215
D60811045	215
D60811050	215
D60811060	215
D60811070	215
D60811080	215
D60811090	215
D60812040	215
D60812045	215
D60812050	215
D60812060	215
D60812070	215
D60812080	215
D60812090	215
D60812100	215
D6798A03	224
D6798A04	224
D6798A05	224
D6798A06	224
D6798A08	224
D6798A10	224
D6798A12	224
D6798A14	224
D6798A16	224
D692105010	212
D692105012	212
D692105016	212
D692105020	212
D692105025	212
D692105030	212
D692106010	212
D692106012	212
D692106016	212
D692106020	212
D692106025	212
D692106030	212
D692106035	212
D692108012	212
D692108016	212
D692108020	212
D692108025	212
D692108030	212
D692108035	212
D692108040	212
D692108050	212
D692108060	212
D692110020	212
D692110025	212
D692110030	212
D692110035	212
D692110040	212
D692110050	212
D692112025	212
D692112030	212
D692112035	212
D692112040	212
D692112045	212
D692112050	212
D692112060	212
D692304	220
D692305	220
D692306	220
D692308	220
D692310	220
D692312	220
D692314	220
D692316	220
D6923IM08	220
D6923IM10	220
D6923IM12	220
D902103	222
D902104	222
D902105	222
D902106	222
D902108	222
D902110	222
D902112	222
D902114	222
D902116	222
D902118	222
D902120	222
D902122	222
D902124	222
D9021IM04	222
D9021IM05	222
D9021IM06	222
D9021IM08	222
D9021IM10	222
D9021IM12	222
D9021IM14	222
D9021IM16	222
D9021IM18	222
D9021IM20	222
D9021IM22	222
D9021IM24	222
D91204008	213
D91204010	213
D91204012	213
D91204016	213
D91204020	213
D91204025	213
D91204030	213
D91204035	213
D91204040	213
D91204045	213
D91204050	213
D91205008	213
D91205010	213
D91205012	213
D91205016	213
D91205020	213
D91205025	213
D91205030	213
D91205035	213
D91205040	213
D91205045	213
D91205050	213
D91206010	213
D91206012	213
D91206016	213
D91206020	213
D91206025	213
D91206030	213
D91206035	213
D91206040	213
D91206045	213
D91206050	213
D91206060	213
D91208010	213
D91208012	213
D91208016	213
D91208020	213
D91208025	213
D91208030	213
D91208035	213
D91208040	213
D91208045	213
D91208050	213
D91208060	213
D91208070	213
D91208080	213
D91210016	213
D91210020	213
D91210025	213
D91210030	213
D91210035	213
D91210040	213
D91210045	213
D91210050	213
D91210060	213
D91210070	213
D91210080	213
D91210090	213
D91210100	213
D91212020	213
D91212025	213
D91212030	213
D91212035	213
D91212040	213
D91212045	213
D91212050	213
D91212060	213
D91212070	213
D91212080	213
D91212090	213
D91212100	213
D91212110	213
D91212120	213
D931806030	211
D931806035	211
D931806040	211
D931806045	211
D931806050	211
D931806060	211
D931806070	211
D931808030	211
D931808035	211
D931808040	211
D931808045	211
D931808050	211
D931808060	211
D931808070	211
D931808080	211
D931808090	211
D931808100	211
D931808110	211
D931808120	211
D931808130	211
D931808140	211
D931808150	211
D931810035	211
D931810040	211
D931810045	211
D931810050	211
D931810060	211
D931810070	211
D931810080	211
D931810090	211
D931810100	211
D931810110	211
D931810120	211
D931810130	211
D931810140	211
D931810150	211
D931812040	211
D931812045	211
D931812050	211
D931812060	211
D931812070	211
D931812080	211
D931812090	211
D931812100	211
D931812110	211
D931812120	211
D931812130	211
D931812140	211
D931812150	211
D931814050	211
D931814060	211
D931814070	211
D931814080	211
D931814090	211
D931814100	211
D931814110	211
D931814120	211
D931814130	211
D931814140	211
D931814150	211
D931816050	211
D931816060	211
D931816070	211
D931816080	211
D931816090	211
D931816100	211
D931816110	211
D931816120	211
D931816130	211
D931816140	211
D931816150	211
D931818060	211
D931818070	211
D931818080	211
D931818090	211
D931818100	211
D931818110	211
D931818120	211
D931818130	211
D931818140	211
D931818150	211
D931820060	211
D931820070	211
D931820080	211
D931820090	211
D931820100	211
D931820110	211
D931820120	211
D931820130	211
D931820140	211
D931820150	211
D93304008	208

Ref.	page
D93304010	208
D93304012	208
D93304016	208
D93304020	208
D93304025	208
D93304030	208
D93304035	208
D93304040	208
D93304045	208
D93304050	208
D93304060	208
D93305010	208
D93305012	208
D93305016	208
D93305020	208
D93305025	208
D93305030	208
D93305035	208
D93305040	208
D93305045	208
D93305050	208
D93305060	208
D93305070	208
D93306010	208
D93306012	208
D93306016	208
D93306020	208
D93306025	208
D93306030	208
D93306035	208
D93306040	208
D93306045	208
D93306050	208
D93306060	208
D93306065	208
D93306070	208
D93308016	208
D93308020	208
D93308025	208
D93308030	208
D93308035	208
D93308040	208
D93308045	208
D93308050	208
D93308060	208
D93308070	208
D93308080	208
D93308090	208
D93308100	208
D93308110	208
D93308120	208
D93310016	208
D93310020	208
D93310025	208
D93310030	208
D93310035	208
D93310040	208
D93310045	208
D93310050	208
D93310060	208
D93310070	208
D93310080	208
D93310090	208
D93310100	208
D93312020	208
D93312025	208
D93312030	208
D93312035	208
D93312040	208
D93312045	208
D93312050	208
D93312060	208
D93312070	208
D93312080	208
D93312090	208
D93312100	208
D93312110	208
D93312120	208
D93314030	208
D93314035	208
D93314040	208
D93314045	208
D93314050	208
D93314060	208
D93314070	208
D93314080	208
D93314090	208
D93314100	208
D93314110	208
D93314120	208
D93316030	208
D93316035	208
D93316040	208
D93316045	208
D93316050	208
D93316060	208
D93316070	208
D93316080	208
D93316090	208
D93316100	208
D93316110	208
D93316120	208
D93318030	208
D93318035	208
D93318040	208
D93318045	208
D93318050	208
D93318060	208
D93318070	208
D93318080	208
D93318090	208
D93318100	208
D93318110	208
D93318120	208
D93320030	208
D93320035	208
D93320040	208
D93320045	208
D93320050	208
D93320060	208
D93320070	208
D93320080	208
D93320090	208
D93320100	208
D93320110	208
D93320120	208
D933IM04010	210
D933IM04016	210
D933IM04020	210
D933IM04025	210
D933IM04030	210
D933IM04035	210
D933IM04040	210
D933IM05010	210
D933IM05016	210
D933IM05020	210
D933IM05025	210
D933IM05030	210
D933IM05035	210
D933IM05040	210
D933IM05050	210
D933IM06010	210
D933IM06016	210
D933IM06020	210
D933IM06025	210
D933IM06030	210
D933IM06035	210
D933IM06040	210
D933IM06050	210
D933IM08016	210
D933IM08020	210
D933IM08025	210
D933IM08030	210
D933IM08035	210
D933IM08040	210
D933IM08050	210
D933IM08060	210
D933IM08070	210
D933IM08080	210
D933IM08090	210
D933IM08100	210
D933IM10020	210
D933IM10025	210
D933IM10030	210
D933IM10035	210
D933IM10040	210
D933IM10050	210
D933IM10060	210
D933IM10070	210
D933IM10080	210
D933IM10090	210
D933IM10100	210
D933IM12020	210
D933IM12030	210
D933IM12040	210
D933IM12050	210
D933IM12060	210
D933IM12070	210
D933IM12080	210
D933IM12090	210
D933IM12100	210
D933IM14030	210
D933IM14040	210
D933IM14050	210
D933IM14060	210
D933IM14070	210
D933IM14080	210
D933IM14100	210
D933IM16030	210
D933IM16040	210
D933IM16050	210
D933IM16060	210
D933IM16070	210
D933IM16080	210
D933IM16090	210
D933IM16100	210
D933IM18030	210
D933IM18040	210
D933IM18050	210
D933IM18060	210
D933IM18070	210
D933IM18080	210
D933IM18090	210
D933IM18100	210
D93403	218
D93404	218
D93405	218
D93406	218
D93408	218
D93410	218
D93412	218
D93414	218
D93416	218
D93418	218
D93420	218
D93422	218
D93424	218
D93427	218
D93430	218
D93433	218
D93436	218
D934IM04	218
D934IM05	218
D934IM06	218
D934IM08	218
D934IM10	218
D934IM12	218
D934IM14	218
D934IM16	218
D934IM18	218
D934IM20	218
D934IM22	218
D934IM24	218
D985IM04	219
D985IM05	219
D985IM06	219
D985IM08	219
D985IM10	219
D985IM12	219
D985IM14	219
D985IM16	219
D985IM18	219
D985IM20	219
D985IM22	219
D985IM24	219
DOMTA10	47
DOMTA20	47
DZ98503	219
DZ98504	219
DZ98505	219
DZ98506	219
DZ98508	219
DZ98510	219
DZ98512	219
DZ98514	219
DZ98516	219
DZ98518	219
DZ98520	219
DZ98522	219
DZ98524	219
DZ98527	219
DZ98530	219
EKHUEFTG	327
EKHUEFTL	327
EKHUEFTP	326
EKHUEILU	326
EKMACFTG	327
EKMACFTL	326
EKMACFTP	326
EKMACILU	326
EKMULAC	324
EKMULAV08	325
EKMULAV10	325
EKMULCAL	325
EKMULCAN	324
EKMULCIS	325
EKMULFAE	324
EKMULFAL	327
EKMULFAP	327
EKMULRAD	325
EKMULROB	326
EKMULTEN	324
EKMULTOL	324
EKMULWCB	325
EMI00	289
EMI45	289
EMI90	289
EMPTC45	128
EMPTC47	128
EMPTC60	128
EMPX4121	293
EMPXS4115	296
EMX1302	292
EMX4502	292
EMX9002	292
EMX9004	292
EMZ00	289
EMZ45	289
EMZ90	289
EPS6072	70
EPS6092	70
EPS6112	70
EPS6132	70
EPS6152	70
EPS6182	70
EQ8808110	79
EQ8810130	79
EQ8812160	79
EQ8816190	79
EQ8820260	79
EQ8824300	79
EQA208110	79
EQA210130	79
EQA212160	79
EQA216190	79
EQA220260	79
EQA224300	79
EQA230330	79
EQA408110	79
EQA410130	79
EQA412160	79
EQA416190	79
EQA420260	79
EQA424300	79
EQA430330	79
EQAC08110	79
EQAC10130	79
EQAC10190	79
EQAC12160	79
EQAC12220	79
EQAC16190	79
EQAC16250	79
EQAC20260	79
EQAC20350	79
EQAC24300	79
EQAC24380	79
EQAC30330	79
ESDA208060	315
ESDA210060	315
ESDR06040	315
ESDR06050	315
ESDR06060	315
ESDR06070	315
ESDR06080	315
ESDR08050	315
ESDR08060	315
ESDR08070	315
ESDR08080	315
ESDR08090	315
ESDR08100	315
ESDR08110	315
ESDR08120	315
ESDR08130	315
ESDR10080	315
ESDR10100	315
ESDR10110	315
ESDR10120	315
ESDR10130	315
ESDR10140	315
ESDR10150	315
ESDR10180	315
ESDR10200	315
ESTRINV40N	182
ESTRINV40Z	182
EVH06	119
EVH08	119
EVH10	119
EVH12	119
EVH14	119
EVH16	119
EVH18	119
EVH20	119
EVH22	119
EVH24	119
EVH30	119
EVH36	119
EVM08	120
EVM10	120
EVM12	120
EVM14	120
EVM16	120
EVM18	120
EVM20	120
EVM22	120
EVM24	120
EVM30	120
EVM36	120
EVM42	120
EVM48	120
EXHBM06	64
EXHBM08	64
EXHBM08C	64
EXHBM10	64
EXHBM10C	64
EXHBM12	64
EXHBM12C	64
EXHBM16	64
EXHBM20	64
FG60BAT	139
FG60CAR	139
FG60GAS	139
FG60GUN	136
FG60GUNEL	136
FGABRA15	138
FGABRA20	138
FGABRA25	138
FGARAM25	137
FGARAM25EP	137
FGBASEGR	138
FGBASENE	138
FGCAEL	139
FGCL15	137
FGCL20	137
FGCL25	137
FGCL30	137
FGCL35	137
FGCL40	137
FGCLCAR40	139
FGCLH15	137
FGCLH17	137

Ref.	page
FGCLH19	137
FGCLH22	137
FGCLH27	137
FGCLH32	137
FGIMAN	139
FGPLET	137
FI63110	148
FI63115	148
FI63120	148
FI63125	148
FI63130	148
FI63150	148
FI63160	148
FICAAB080	280
FICAAB119	280
FICACL13	280
FICACL26	280
FICAPD160	280
FICAPS080	280
FP08GUN	132
FP12GUN	132
FPAM0837	133
FPAM0851	133
FPAP085166	133
FPC303708	133
FPC304708	133
FPCG0816	133
FPCG0819	133
FPCG1612	134
FPCG1912	134
FPCGD1612	134
FPCGD1912	134
FPCL0816	133
FPCL0819	133
FPCL0825	133
FPCL0827	133
FPCL0832	133
FPCL0838	133
FPCL0844	133
FPCL0851	133
FPCL0857	133
FPCL0864	133
FPCL0870	133
FPCL2212	134
FPCL2712	134
FPCL3212	134
FPCL3712	134
FPCL4212	134
FPCL4712	134
FPCLD2212	135
FPCLD2712	135
FPCLD3212	135
FPCLD3712	135
FPCLD4212	135
FPCLD4712	135
FPCR0812	134
FPCR0822	134
FPCR0827	134
FPCRAM	132
FPCRM80812	134
FPCRM80827	134
FPCRRO	132
FPCT3212	135
FPP3VE	132
FPP4AM	132
FPP5RO	132
FPPI081613	134
FPPISCL08	135
FPPISCL12	135
FPPISCM12	135

Ref.	page
FPPISCT12	135
FPPISPL08	135
GAFOM06Z	313
GAFOM08Z	313
GAFOM10Z	313
GAFOM12Z	313
GAFOM16Z	313
GDZ03	121
GDZ04	121
GDZ05	121
GDZ06	121
GDZ08	121
GDZ10	121
GDZ13	121
GDZ15	121
GDZ18	121
GDZ20	121
GDZ24	121
GESPM08ZE	313
GESPM10ZE	313
GLO351515	287
GLO357510	287
GMA035	296
GMA040	296
GMZ08012	194
GMZ10016	194
GMZ12020	194
GMZ15026	194
GMZ17030	194
GMZ19035	194
GPG271812	286
GPG283018	286
GPG351312	286
GPG384020	286
GPG402015	286
GPI271812	286
GPI283015	286
GPO351515	287
GPO357510	287
GPP271812	286
GPV251120	286
GPX2M412120	290
GPX2M414120	290
GPX412115	290
GPX412120	290
GPX412125	290
GPX414115	290
GPX414120	290
GPX414125	290
GPXS4115012	296
GPXS4115162	296
GPXS4115212	296
GPXS4115325	296
GPZ201010	286
GPZ250808	286
GRBL001	281
GRBL002	281
GRBL003	281
GRBL010	281
GRBL020	281
GRBL030	281
GRBL040	281
GRBL050	281
GRBL060	281
GRBL070	281
GRBL080	281
GRBL090	281
GRBL100	281
GRBL120	281
GRBL140	281

Ref.	page
GRNATTV	281
GRNE060	281
GRNE070	281
GRNE080	281
GRNE090	281
GRNE100	281
GRNE120	281
GRZ05	120
GRZ06	120
GRZ08	120
GRZ10	120
GRZ11	120
GRZ12	120
GRZ14	120
GRZ16	120
GRZ18	120
GRZ20	120
GRZ22	120
GRZ25	120
GRZ28	120
GRZ32	120
GRZ36	120
GRZ42	120
GRZ45	120
GRZ50	120
GSTC040080	300
GSTC080120	300
GSTU040055	300
HARM03026	192
HARM04035	192
HARM05037	192
HARM06050	192
HARM08060	192
HCM06	65
HCM08	65
HCM10	65
HCRM03026	192
HCRM04035	192
HCRM05037	192
HCRM06050	192
HCRM08060	192
HCRM10065	192
HCRM12075	192
HE1665032	54
HE1665045	54
HE1665057	54
HE1665070	54
HE1665080	54
HE1665100	54
HE1665125	54
HE65032	54
HE65045	54
HE65057	54
HE65070	54
HE65080	54
HE65100	54
HE65125	54
HEA4M06	63
HEA4M08	63
HEA4M10	63
HEA4M12	63
HEA4M16	63
HEA4M20	63
HEC4M06	63
HEC4M08	63
HEC4M10	63
HEC4M12	63
HECLOM06	63
HECLOM08	63
HECLOM10	63

Ref.	page
HECLOM12	63
HECLOM12D	63
HECLOM16	63
HEHCM08	64
HEHCM10	64
HEHCM12	64
HEHOM06	63
HEHOM08	63
HEHOM10	63
HEHOM12	63
HEHOM12D	63
HEHOM16	63
HEHOM20	63
HENOM06	64
HENOM08	64
HENOM10	64
HENOM12	64
HENOM16	64
HENOM20	64
HENSM08	64
HENSM10	64
HENSM12	64
HENSM16	64
HOCRM647	127
HOCRM660	127
HOCUM647	127
HP75072	54
HP75092	54
HP75112	54
HP75132	54
HP75152	54
HP75182	54
HPZ75072	54
HPZ75092	54
HPZ75112	54
HPZ75132	54
HPZ75152	54
HPZ75182	54
HPZ75212	54
HR75072	54
HR75092	54
HR75112	54
HR75132	54
INCO421	108
INCO432	108
INCO438	108
INCO446	108
INCO459	108
INCO537	108
INCO552	108
INCO565	108
INCO580	108
INCO637	108
INCO652	108
INCO665	108
INCO680	108
INHE837	108
INHE855	108
INHE865	108
INPINZANI	109
INPISANIN	109
INSI421	108
INSI432	108
INSI438	108
INSI537	108
INSI552	108
INSI565	108
INSI637	108
INSI652	108
INSI665	108

Ref.	page
INSI865	108
INVA27050	182
INVA27060	182
INVA27070	182
INVA27080	182
INVN6040	182
INVN6050	182
INVN6060	182
INVN6070	182
INVN7030	182
INVN7040	182
INVN7050	182
INVN7060	182
INVN7070	182
INVN7080	182
INVN7090	182
INVZ6040	181
INVZ6050	181
INVZ6060	181
INVZ6070	181
INVZ7030	181
INVZ7040	181
INVZ7050	181
INVZ7060	181
INVZ7070	181
INVZ7080	181
INVZ7090	181
IPAAR09	100
IPAAR12	100
IPAGN09	100
IPAGN12	100
IPAGR09	100
IPAGR12	100
IPATO09	100
IPATO12	100
KCGPD0100	303
KCGPD0135	303
KCGPD0140	303
KCGPX0235	303
KCGPX0240	303
KCGPX0335	303
KCGPX0340	303
KCPSA0235	302
KCPSA0240	302
KCPSA0335	302
KCPSA0340	302
KCPSD0100	302
KCPSD0135	302
KCPSD0140	302
KCPSE0235	303
KCPSE0240	303
KCPSE0335	303
KCPSE0340	303
KFRSC3050	296
KFSAU10160	300
KFSAU10200	300
KFSFIM08	298
KFSFLM08	298
KFSMA10200	300
KFSMA10250	300
KFSRV10250	301
KFSRV12350	301
KIT MO-PS	75
KITINPIN01	109
KTGPX0235	303
KTGPX0240	303
KTGPX0335	303
KTGPX0340	303
KTPSE0235	303
KTPSE0240	303

Ref.	page
KTPSE0335	303
KTPSE0340	303
LSAB6I012	252
LSAB6I015	252
LSAB6I016	252
LSAB6I018	252
LSAB6I022	252
LSAB6I028	252
LSABD6012	251
LSABD6015	251
LSABD6018	251
LSABD6022	251
LSABD6028	251
LSABDI0012	252
LSABDI0015	252
LSABDI0018	252
LSABDI0022	252
LSABGAT022	242
LSABGAT028	242
LSABGAT035	242
LSABGAT040	242
LSABGAT048	242
LSABGAT060	242
LSABGAT075	242
LSABGAT090	242
LSABGATT10	242
LSABGS015	261
LSABGS018	261
LSABGS022	261
LSABGUG15	277
LSABGUG18	277
LSABGUG20	277
LSABGUG22	277
LSABGUG25	277
LSABGUG28	277
LSABGUG32	277
LSABGUG40	277
LSABGUG50	277
LSABID012	276
LSABID014	276
LSABID016	276
LSABID020	276
LSABID028	276
LSABIN012	276
LSABIN014	276
LSABIN016	276
LSABIN020	276
LSABIN028	276
LSABM6012	250
LSABM6014	250
LSABM6016	250
LSABM6018	250
LSABM6022	250
LSABM6028	250
LSABM6032	250
LSABM6040	250
LSABM8090	242
LSABM8110	242
LSABM8125	242
LSABM8160	242
LSABMUG15	277
LSABMUG18	277
LSABMUG22	277
LSABMUG26	277
LSABMUG32	277
LSABPI016	255
LSABPI018	255
LSABPI020	255
LSABPI022	255
LSABPI025	255

Ref.	page
LSABPI028	255
LSABPI032	255
LSABPI040	255
LSABPRG15	278
LSABPRG20	278
LSABPRG25	278
LSABPU016	255
LSABPU018	255
LSABPU020	255
LSABPU022	255
LSABPU025	255
LSABPU028	255
LSABPU032	255
LSABPU037	255
LSABPU040	255
LSABPU050	255
LSABPU063	255
LSABRET022	236
LSABRET028	236
LSABRET035	236
LSABRET040	236
LSABRET048	236
LSABRET060	236
LSABRET075	236
LSABRET090	236
LSABRET110	236
LSABRET125	236
LSABRIT022	238
LSABRIT028	238
LSABRIT035	238
LSABRIT040	238
LSABRIT048	238
LSABRIT060	238
LSABRIT075	238
LSABRIT090	238
LSABRIT110	238
LSABTA0630	313
LSABTA0640	313
LSABTA0650	313
LSABTA0840	313
LSABTA0860	313
LSABTAB0630	313
LSABTAB0640	313
LSABTAB0650	313
LSABTD018	279
LSABTD022	279
LSABTS018	279
LSABTS022	279
LSACHA08C	61
LSACHA10C	61
LSACHG08C	60
LSACHG10C	60
LSACHT08C	57
LSACHT08L	57
LSACHT10C	57
LSACHT10L	57
LSACHT12C	57
LSACHT12L	57
LSACHT16C	57
LSACHTA208C	57
LSACHTA208L	57
LSACHTA210C	57
LSACHTA210L	57
LSACHTA212C	57
LSACHTA212L	57
LSAH06060	43
LSAH08060	43
LSAH08075	43
LSAH08090	43
LSAH10070	43
LSAH10090	43
LSAH10120	43
LSAH12090	43
LSAH12110	43
LSAH16125	43
LSASF008016	257
LSASF012022	257
LSASF016027	257
LSASF020032	257
LSASF025040	257
LSASF030045	257
LSASF035050	257
LSASF040060	257
LSASF050070	257
LSBAESM04	106
LSBAESM05	106
LSBAESM06	106
LSBAGAM04	106
LSBAGAM05	106
LSBAGAM06	106
LSCABA004	106
LSCABA005	106
LSCABA006	106
LSCAPA004	107
LSCAPA005	107
LSCAPA006	107
LSESDR06080	315
LSESDR08060	315
LSESDR08080	315
LSESDR08100	315
LSESDR08120	315
LSESDR10080	315
LSESDR10100	315
LSESDR10120	315
LSHENOM06	64
LSHENOM08	64
LSHENOM10	64
LSHP75072	54
LSHP75092	54
LSHP75112	54
LSHP75132	54
LSINCO432	108
LSINCO438	108
LSINCO446	108
LSINCO537	108
LSINCO552	108
LSINCO637	108
LSINCO652	108
LSMAE0630	311
LSMAE0825	311
LSMAE1030	311
LSMAR0420	312
LSMAR0630	312
LSMAR0830	312
LSMAR1030	312
LSMI08075	45
LSMI08090	45
LSMI10070	45
LSMI10090	45
LSMI10120	45
LSMI12110	45
LSMIA408075	44
LSMIA410090	44
LSMIA412110	44
LSMOES06070	78
LSMOES08110	78
LSMOES10115	78
LSMOES12110	78
LSMOTN12050	78
LSMOTN15085	78
LSMOTN20085	78
LSPAESM04	107
LSPAESM05	107
LSPAESM06	107
LSPAGAM04	107
LSPAGAM05	107
LSPAGAM06	107
LSTALAM06	65
LSTALAM08	65
LSTALAM10	65
LSTCCA05025	95
LSTCCA05030	95
LSTCCA05035	95
LSTCCA05050	95
LSTCCA06035	95
LSTCCA06040	95
LSTCCA06050	95
LSTCCA06060	95
LSTCCA06070	95
LSTCCA08060	95
LSTCCA08080	95
LSTCCC05025	94
LSTCCC05030	94
LSTCCC05035	94
LSTCCC05050	94
LSTCCC06035	94
LSTCCC06040	94
LSTCCC06050	94
LSTCCC06060	94
LSTCCC06070	94
LSTCCC08060	94
LSTCCC08080	94
LSTNXA08080	91
LSTNXA08100	91
LSTNXA08120	91
LSTNXA10080	91
LSTNXA10100	91
LSTNXE08080	91
LSTNXE08100	91
LSTNXE08120	91
LSTNXE10080	91
LSTNXE10100	91
LSVRSE06030	311
MABM6018	127
MAE0620	311
MAE0630	311
MAE0825	311
MAE1030	311
MAE1235	311
MAE1650	311
MAE2060	311
MAMH0610	312
MAMH0620	312
MAMH0630	312
MAMH0640	312
MAMH0650	312
MAR0420	312
MAR0620	312
MAR0630	312
MAR0825	312
MAR0830	312
MAR1030	312
MAR1235	312
MAR1650	312
MAR5322	312
MARI0830	312
MARI1030	312
MEDUB06	98
MEDUB07	98
MEDUB08	98
MEDUB10	98
MI06045	45
MI06060	45
MI06080	45
MI06120	45
MI06140	45
MI06160	45
MI06170	45
MI06180	45
MI08050	45
MI08075	45
MI08090	45
MI08115	45
MI10070	45
MI10090	45
MI10120	45
MI10150	45
MI12075	45
MI12090	45
MI12110	45
MI12140	45
MI16090	45
MI16145	45
MI16170	45
MI20120	45
MI20170	45
MI20220	45
MIA406045	44
MIA406060	44
MIA406080	44
MIA408050	44
MIA408075	44
MIA408090	44
MIA408115	44
MIA410070	44
MIA410090	44
MIA410120	44
MIA410150	44
MIA412075	44
MIA412090	44
MIA412110	44
MIA412140	44
MIA416090	44
MIA416145	44
MIA416170	44
MIA420120	44
MIA420170	44
MIA420220	44
MLMULT101	197
MLMULT201	197
MLMULT301	197
MLPLAT101	197
MLPLAT201	197
MLPLAT301	197
MLTBOP101	196
MLTPPOP101	196
MLTPPOT101	197
MLTPPOT201	197
MLTPPOT301	197
MOBOMBA	78
MOES06070	78
MOES08110	78
MOES10115	78
MOES12110	78
MOH300	76
MOH410	76
MOHW300	76
MOHW410	76
MOP300	75
MOP410	75
MOPISNEU	78
MOPISP3385	78
MOPISP3585	78
MOPISPR	78
MOPISPUR6	78
MOPISSI	78
MOPISTO	78
MOPS300	75
MOPS300EP	75
MOPS410	75
MOPSP300	75
MOPSP410	75
MOPU300	75
MOPU410	75
MOPUR30385	77
MOPUR30585	77
MOPURE600	77
MORCANU	78
MORCAPU	78
MORCEPKIT	78
MOTM12100	78
MOTM16100	78
MOTM22100	78
MOTN12050	78
MOTN12080	78
MOTN15085	78
MOTN15130	78
MOTN20085	78
MOTRO08	78
MOTRO10	78
MOTRO12	78
MOV300	76
MOV410	76
MOVS300	76
MOVS410	76
MSCAHT	85
MSCATP	85
MSPRB290	81
MSPRG290	81
MSPRM290	81
MSPRN290	81
MSSF290	81
MSTR290	81
NBP3513	153
NBP3516	153
NBP3519	153
NBP3525	153
NBP4216	153
NBP4219	153
NBP4225	153
NBP4232	153
NBP4238	153
NBP4825	153
NBP4832	153
NBP4838	153
NBP4850	153
NBR3509	151
NBR3513	151
NBR3516	151
NBR3519	151
NBR4213	151
NBR4216	151
NBR4219	151
NBR4225	151
NBR4232	151
NBR4238	151
NBR4816	151
NBR4819	151
NBR4825	151
NBR4832	151
NBR4838	151
NBR4845	151
NBR4850	151
NUXSM0841	299
OMEM06	127
P100KOM10	163
P100VEK	163
P100VEK10	163
P100VEK13	163
P103925Z	161
P103930Z	161
P103938Z	161
P103945Z	161
P204316Z	161
P204319Z	161
P204322Z	161
P204325	161
P204325Z	161
P204330	161
P204330Z	161
P204338	161
P204338Z	161
P204345	161
P204345Z	161
P204355	161
P204355Z	161
P304825	161
P304838	161
P403913Z	162
P403916	161
P403916Z	162
P403919	161
P403919Z	162
P403925	161
P403925Z	162
P403932	161
P403932Z	162
P403938	161
P403938Z	162
P50M413Z	162
P50M416	162
P50M416Z	162
P50M419	162
P50M419Z	162
P50M425	162
P50M425Z	162
P50M432	162
P50M432Z	162
P50M438	162
P704855	162
P704865	162
P704880	162
P704895	162
P70TPBL	162
P70TPNG	162
P903510	162
P904017	162
PACC15015	193
PACC15020	193
PACC15025	193
PACC20025	193
PACC20030	193
PACC20035	193
PACC20040	193
PACC20045	193
PACC20050	193
PACP22520	193
PACP22525	193
PACP22530	193
PACP25040	193

Ref.	page
PACP25050	193
PACP29050	193
PACP29060	193
PACP29070	193
PACP34030	193
PACP34040	193
PACP34050	193
PACP34060	193
PACP34070	193
PACP34080	193
PAESM04	107
PAESM05	107
PAESM06	107
PAESM08	107
PAEXM08	240
PAEXM10	240
PAGAM04	107
PAGAM05	107
PAGAM06	107
PAGAM08	107
PCU0005	128
PCU0006	128
PFA4M0800	316
PFA4M0810	316
PFA4M1000	316
PFZNM0800	316
PFZNM0810	316
PFZNM1000	316
PGI2718	289
PGI2830	289
PGI3840	289
PGSA26	296
PGX4121	293
PGX4141	293
PGZ2718	289
PGZ2830	289
PGZ3840	289
PL35019	124
PL35025	124
PL35035	124
PL35045	124
PL35055	124
PL39025	124
PL39035	124
PL39045	124
PL39055	124
PL42070	124
PL42080	124
PL48090	124
PL48100	124
PL48110	124
PL48120	124
PL48130	124
PLCAZ4213	125
PLCAZ4216	125
PLCAZ4219	125
PLCAZ4225	125
PLCAZ4232	125
PLCAZ4241	125
PLCAZ4251	125
PLEP35025	124
PLEP35035	124
PLRA3925	125
PLRA3935	125
PLRA3945	125
PLRA3955	125
PLRA4835	125
PLTR3525	125
PLTR3535	125
PLTR3545	125

Ref.	page
PMO1012	301
PRX01	291
PS1655060	147
PS1655082	147
PS1655098	147
PS1655115	147
PS1955195	147
PS1955230	147
PS55060	147
PS55082	147
PS55098	147
PS55115	147
PS55130	147
PS55150	147
PS55180	147
PSAA0400	297
PSAA2125	297
PSAA3150	297
PSAAV0150	297
PSAUN200	297
PSEA601575	297
PSEA602125	297
PSEA603150	297
PSEUN060200	297
PSL1655075	147
PSL1655085	147
PSL1655105	147
PSL1655130	147
PSL1655150	147
PSL1955255	147
PSL1955285	147
PSL55075	147
PSL55085	147
PSL55105	147
PSL55130	147
PSL55150	147
PSL55175	147
PSL55200	147
PSL55230	147
PTBR10035	204
PTBR13355	204
PTEM18040	204
PTET169845	204
PTOB05015	204
PTOB06015	204
PTOB08015	204
PTOB10015	204
PTOB12020	204
PTTT030716	204
PTTT111430	204
PTUN12038	204
PTUN16038	204
PTUN20060	204
PTUN20080	204
PTUN24060	204
PTUN24080	204
PUCA01	88
PUCL500	88
PUCUC01	227
PUCUC02	227
PUCUC03	227
PUCUL01	227
PUCUL02	227
PUCUL03	227
PUEP750	87
PUFC750	87
PUFP750	87
PUOXBITC10	227
PUOXBITC15	227
PUOXBITC20	227

Ref.	page
PUOXBITC25	227
PUOXBITC30	227
PUOXBITC40	227
PUOXBITL10	227
PUOXBITL15	227
PUOXBITL20	227
PUOXBITL25	227
PUOXBITL30	227
PUOXBITL40	227
PUPHC01	226
PUPHC02	226
PUPHC03	226
PUPHL01	226
PUPHL02	226
PUPHL03	226
PUPI01	88
PUPI02	88
PUPM014	228
PUPOC01	227
PUPOC02	227
PUPOC03	227
PUPOL01	227
PUPOL02	227
PUPOL03	227
PUSC750	86
PUSP750	86
PUTC750	87
PUTO010	226
PUTO015	226
PUTO020	226
PUTO025	226
PUTO030	226
PUTO040	226
PUTP750	86
PUTPR750	86
PUZ2718	289
PUZ3840	289
RAFEM145	319
RAFEM175	319
RAFIN100	318
RAFRE095	318
RAPES032	319
RARAY032	319
RARO100	319
RATRG095	318
RATRI095	318
RECA4008	113
RECA4010	113
RECA4012	113
RECA4016	113
RECA4810	113
RECA4812	113
RECA4814	113
RECA4816	113
RECA4818	113
REFL4012	114
REFL4014	114
REFL4016	114
REFL4018	114
REFL4020	114
REFL4025	114
REFL4814	114
REFL4816	114
REFL4818	114
REFL4824	114
REFL4830	114
REFL4835	114
REFL4840	114
REFL4845	114
REFL4850	114

Ref.	page
REIN3206	113
REIN3208	113
REIN3212	113
REIN3215	113
REIN4008	113
REIN4010	113
REIN4012	113
REIN4016	113
REIN4810	113
REIN4812	113
REIN4816	113
REIN4818	113
REIN4820	113
RENO3206	112
RENO3208	112
RENO3208BL	113
RENO3208NE	114
RENO3210	112
RENO3210BL	113
RENO3210NE	114
RENO3212	112
RENO3212BL	113
RENO3212NE	114
RENO3214	112
RENO3216	112
RENO3218	112
RENO4006	112
RENO4008	112
RENO4008BL	113
RENO4008NE	114
RENO4010	112
RENO4010BL	113
RENO4010NE	114
RENO4012	112
RENO4012BL	113
RENO4012NE	114
RENO4014	112
RENO4014BL	113
RENO4014NE	114
RENO4016	112
RENO4018	112
RENO4020	112
RENO4025	112
RENO4030	112
RENO4035	112
RENO4806	112
RENO4808	112
RENO4810	112
RENO4810BL	113
RENO4810NE	114
RENO4812	112
RENO4812BL	113
RENO4812NE	114
RENO4814	112
RENO4814BL	113
RENO4814NE	114
RENO4816	112
RENO4816BL	113
RENO4816NE	114
RENO4818	112
RENO4820	112
RENO4822	112
RENO4824	112
RENO4826	112
RENO4828	112
RENO4830	112
RENO4835	112
RENO6008	112
RENO6010	112
RENO6012	112

Ref.	page
RENO6016	112
RENO6018	112
RENO6025	112
RESX300	291
RESX550	291
RETE5220	301
RMEX01	116
RMMA01	116
RMPA01	116
RSA23509	155
RSA24213	155
RSA24216	155
RSA24219	155
RSA24816	155
RSA24819	155
RSA24825	155
RSZ3509	154
RSZ3513	154
RSZ3516	154
RSZ4213	154
RSZ4216	154
RSZ4219	154
RSZ4225	154
RSZ4232	154
RSZ4813	154
RSZ4816	154
RSZ4819	154
RSZ4825	154
RSZ4832	154
RSZ4838	154
RTX01	293
SACI06080	321
SAIL06080	320
SALH08100	320
SALH10120	320
SALN08100	320
SALN10120	320
SATEA0865	321
SATEA1075	321
SATEB0860	321
SATEB1080	321
SAWH06070	321
SAWHM06060	321
SAWL05080	320
SAWZ05080	320
SCAS3317DR	201
SCAS3317IZ	201
SCCDZ402575	202
SCCE200404	201
SCCI303030	202
SCCI404040	202
SCCI606060	202
SCED050503	200
SCED060604	200
SCED070705	200
SCED090904	200
SCED090906	200
SCED101009	200
SCEI040402	200
SCEI040404	200
SCEI040406	200
SCEI050504	200
SCEI060604	200
SCEI060606	200
SCEI060608	200
SCEI070704	200
SCEI080808	200
SCEI101004	200
SCEI101010	200
SCEM081240	202

Ref.	page
SCEM101640	202
SCER302525	203
SCER392822	203
SCGA100404	201
SCGEZ704025	203
SCLCZ354030	203
SCLD040606	201
SCLD060806	201
SCMX020214	203
SCMX030314	203
SCMX040415	203
SCMX050515	203
SCMX060618	203
SCMX070718	203
SCOB020214	202
SCOB030314	202
SCOB040415	202
SCOB050515	202
SCOB060618	202
SCOB070718	202
SCOB090920	202
SCOB101020	202
SCOB121222	202
SCOZ151525	202
SCPD107530	203
SCPD128035	203
SCREZ357565	203
SCRF070605	201
SCRF070705	201
SCRF090906	201
SCRF101009	201
SCRF151506	201
SCRG090505	201
SCRG090508	201
SCRX090	292
SEACRB280	85
SEACRG280	85
SIPRB280	84
SIPRG280	84
SIPRM280	84
SIPRN280	84
SIPRSB280	84
SIPRST280	84
SIPRT280	84
SIUNIB280	84
SIUNIG280	84
SIUNIM280	84
SIUNIN280	84
SIUNIT280	84
SIUNSB280	85
SIUNST280	85
SJZ0403	118
SJZ0505	118
SJZ0506	118
SJZ0608	118
SJZ0810	118
SJZ0811	118
SJZ1013	118
SJZ1014	118
SJZ1216	118
SJZ1220	118
SJZ1422	118
SJZ1426	118
SJZ1630	118
SJZ1634	118
SJZ1640	118
SLPC10070	55
SLPC10080	55
SLPC10100	55
SLPC12100	55

Ref.	page
SLPC16100	55
SLPC16120	55
SLPC18120	55
SLPT10070	55
SLPT10080	55
SLPT10100	55
SLPT10110	55
SLPT12080	55
SLPT12090	55
SLPT12100	55
SLPT12120	55
SLPT16100	55
SLPT16120	55
SLPT16140	55
SLPT16160	55
SLPT18110	55
SLPT18120	55
SLPT18140	55
SLPT18150	55
SLPT18170	55
SLPT18200	55
SLPT24140	55
SLPT24170	55
SLPT24200	55
SLPT24220	55
SLPT28170	55
SLPT28200	55
SLPT28240	55
SOPG27	294
SOPG38	294
SOPG41	294
SOTP2718	290
SOTP2830	290
SOTP3840	290
SOTP4121	294
SOTP4141	294
SOUO04110	200
SOUO06100	200
SOUO07125	200
SOUO08120	200
SOUO10140	200
SOUR30140DR	200
SOUR30140IZ	200
SPGH2718	288
SPGH3840	288
SPH2718	288
SPH3840	288
SPRXH4121	290
SPRXV4121	290
SPUX412100	291
SPUX412145	291
SPV2718	287
SPV3840	287
SPX412115	290
SPX412130	290
SPX412145	290
SPX414110	290
SPX414115	290
SPX414130	290
SPX414145	290
SPX414160	290
SPX414175	290
SPZ271820	287
SPZ271830	287
SPZ384020	287
SPZ384025	287
SPZ384030	287
SPZ384035	287
SPZ384040	287
SPZ384050	287

Ref.	page
SPZ384060	287
STR1680	300
SUAB0603	307
SUAB0607	307
SUAB0614	307
SUCA0602	307
SUCA0604	307
SUCA0607	307
SUCA0802	307
SUCA0804	307
SUCA0807	307
SUCA1002	307
SUCA1004	307
SUCA1007	307
SUCA1202	307
SUCA1204	307
SUCA1207	307
SUCA1502	307
SUCA1504	307
SUCA1507	307
SUCA1902	307
SUCA1904	307
SUCA1907	307
SUCA2502	307
SUCA2504	307
SUCA2507	307
SUCL02	306
SUCL04	306
SUCL10	306
SUCL15	306
SUCU0602	307
SUCU0605	307
SUCU0606	307
SUCU0607	307
SUMOM06	306
SUMOM08	306
SUMOM10	306
SUMOM12	306
SUMOP09	306
SUMOP11	306
SUMOP13	306
SUSTC47090	129
SUSTC47180	129
SUSTC47240	129
SUSTC47300	129
SUSTC47400	129
SUVA0602	306
SUVA0604	306
SUVA0610	306
SUVA0615	306
SUVA0802	306
SUVA0804	306
SUVA0810	306
SUVA0815	306
SVCBL	195
SVCMA	195
SVNB01	195
SVNB02	195
SVNM01	195
SVNM02	195
T0840304Z	215
T0840306Z	215
T0840308Z	215
T0840310Z	215
T0840312Z	215
T0840316Z	215
T0840320Z	215
T0840325Z	215
T0840330Z	215
T0840335Z	215

Ref.	page
T0840340Z	215
T0840406Z	215
T0840408Z	215
T0840410Z	215
T0840412Z	215
T0840416Z	215
T0840420Z	215
T0840425Z	215
T0840435Z	215
T0840445Z	215
T0840450Z	215
T0840460Z	215
T0840470Z	215
T0840506Z	215
T0840508Z	215
T0840510Z	215
T0840512Z	215
T0840516Z	215
T0840520Z	215
T0840525Z	215
T0840530Z	215
T0840535Z	215
T0840540Z	215
T0840545Z	215
T0840550Z	215
T0840560Z	215
T0840608Z	215
T0840610Z	215
T0840616Z	215
T0840620Z	215
T0840625Z	215
T0840630Z	215
T0840635Z	215
T0840640Z	215
T0840645Z	215
T0840650Z	215
T0840660Z	215
T8129006	156
T8129009	156
T8129013	156
T8129016	156
T8129019	156
T8129022	156
T8129025	156
T8135006	156
T8135009	156
T8135013	156
T8135016	156
T8135019	156
T8135025	156
T8135032	156
T813509BLE	157
T8139009	156
T8139013	156
T8139016	156
T8139019	156
T8139022	156
T8139025	156
T8139032	156
T8139038	156
T8139045	156
T8139050	156
T8142009	156
T8142013	156
T8142016	156
T8142019	156
T8142022	156
T8142025	156
T8142032	156
T8142038	156

Ref.	page
T8142045	156
T8142050	156
T8142060	156
T8142070	156
T8142080	156
T8142090	156
T814213BLE	157
T814225BLE	157
T8148009	156
T8148013	156
T8148016	156
T8148019	156
T8148022	156
T8148025	156
T8148032	156
T8148038	156
T8148045	156
T8148050	156
T8148060	156
T8148070	156
T8148080	156
T8148090	156
T8148100	156
T8148110	156
T8148120	156
T8155013	156
T8155016	156
T8155019	156
T8155022	156
T8155025	156
T8155032	156
T8155038	156
T8155045	156
T8155050	156
T8155060	156
T8155070	156
T8155080	156
T8155090	156
T8155100	156
T8155110	156
T8155120	156
T8163016	156
T8163019	156
T8163022	156
T8163025	156
T8163032	156
T8163038	156
T8163045	156
T8163050	156
T8163060	156
T8163070	156
T8163080	156
T8163090	156
T8163100	156
T8163110	156
T8163120	156
T8229006	158
T8229009	158
T8229013	158
T8229016	158
T8229019	158
T8229022	158
T8229025	158
T8235009	158
T8235013	158
T8235016	158
T8235019	158
T8235022	158
T8235025	158
T8235032	158

Ref.	page
T8235038	158
T8239009	158
T8239013	158
T8239016	158
T8239019	158
T8239022	158
T8239025	158
T8239032	158
T8239038	158
T8239045	158
T8239050	158
T8242013	158
T8242016	158
T8242019	158
T8242022	158
T8242025	158
T8242032	158
T8242038	158
T8242045	158
T8242050	158
T8242060	158
T8242070	158
T8248013	158
T8248016	158
T8248019	158
T8248022	158
T8248025	158
T8248032	158
T8248038	158
T8248045	158
T8248050	158
T8248060	158
T8248070	158
T8255013	158
T8255016	158
T8255019	158
T8255022	158
T8255025	158
T8255032	158
T8255038	158
T8255045	158
T8255050	158
T8255060	158
T8255070	158
T8263025	158
T8263032	158
T8263038	158
T8263045	158
T8263050	158
T8263060	158
T8263070	158
T9630410Z	217
T9630412Z	217
T9630416Z	217
T9630420Z	217
T9630430Z	217
T9630440Z	217
T9630450Z	217
T9630510Z	217
T9630512Z	217
T9630516Z	217
T9630520Z	217
T9630525Z	217
T9630530Z	217
T9630540Z	217
T9630550Z	217
T9630560Z	217
T9630610Z	217
T9630612Z	217
T9630616Z	217

Ref.	page
T9630620Z	217
T9630625Z	217
T9630630Z	217
T9630640Z	217
T9630650Z	217
T9630660Z	217
T9650306Z	217
T9650308Z	217
T9650310Z	217
T9650312Z	217
T9650316Z	217
T9650320Z	217
T9650325Z	217
T9650408Z	217
T9650410Z	217
T9650412Z	217
T9650416Z	217
T9650420Z	217
T9650425Z	217
T9650430Z	217
T9650435Z	217
T9650440Z	217
T9650450Z	217
T9650510Z	217
T9650512Z	217
T9650516Z	217
T9650520Z	217
T9650525Z	217
T9650530Z	217
T9650535Z	217
T9650540Z	217
T9650550Z	217
T9650560Z	217
T9650610Z	217
T9650612Z	217
T9650616Z	217
T9650620Z	217
T9650625Z	217
T9650630Z	217
T9650635Z	217
T9650640Z	217
T9650650Z	217
T9650660Z	217
T9850306Z	216
T9850308Z	216
T9850310Z	216
T9850312Z	216
T9850316Z	216
T9850320Z	216
T9850325Z	216
T9850330Z	216
T9850406Z	216
T9850408Z	216
T9850410Z	216
T9850412Z	216
T9850416Z	216
T9850420Z	216
T9850425Z	216
T9850430Z	216
T9850435Z	216
T9850440Z	216
T9850450Z	216
T9850506Z	216
T9850508Z	216
T9850510Z	216
T9850512Z	216
T9850516Z	216
T9850520Z	216
T9850525Z	216
T9850530Z	216

Ref.	page
T9850535Z	216
T9850540Z	216
T9850545Z	216
T9850550Z	216
T9850608Z	216
T9850610Z	216
T9850612Z	216
T9850616Z	216
T9850620Z	216
T9850625Z	216
T9850630Z	216
T9850635Z	216
T9850640Z	216
T9850650Z	216
T9850660Z	216
TACB166025	301
TACN165525	301
TACOBRIBL6	273
TACOBRIBL8	273
TACOBRIGR8	273
TACOBRINE6	272
TACOBRINE8	272
TACOL05	99
TACOL06	99
TACOL08	99
TACOL10	99
TACOL12	99
TACOLA06	99
TACON04	99
TACON05	99
TACON06	99
TACON07	99
TACON08	99
TACON10	99
TACON12	99
TACON14	99
TACON16	99
TACOP05	100
TACOP06	100
TACOP07	100
TACOP08	100
TACOP09	100
TACOP10	100
TACOP11	100
TACOP12	100
TACOP14	100
TAEN4213	156
TAEN4216	156
TAEN4219	156
TAEN4225	156
TAEN4232	156
TAEZ4213	156
TAEZ4216	156
TAEZ4219	156
TAEZ4225	156
TAEZ4232	156
TALA532	65
TALAM04	65
TALAM05	65
TALAM06	65
TALAM08	65
TALAM10	65
TALAM12	65
TAME05030	65
TAME06032	65
TAME08038	65
TAME08060	65
TAME10060	65
TAPLAME	110
TAPLANY	110

Ref.	page
TAPLAZK	110
TB05030	180
TB05040	180
TB05050	180
TB05060	180
TB06025	180
TB06030	180
TB06035	180
TB06040	180
TB06045	180
TB06050	180
TB06060	180
TB06070	180
TB06080	180
TB06090	180
TB06100	180
TB06110	180
TB06120	180
TB07030	180
TB07040	180
TB07050	180
TB07060	180
TB07070	180
TB07080	180
TB07090	180
TB07100	180
TB07120	180
TB08030	180
TB08040	180
TB08045	180
TB08050	180
TB08060	180
TB08070	180
TB08080	180
TB08090	180
TB08100	180
TB08110	180
TB08120	180
TB08130	180
TB08140	180
TB08150	180
TB08160	180
TB08180	180
TB08200	180
TB10040	180
TB10050	180
TB10060	180
TB10070	180
TB10080	180
TB10090	180
TB10100	180
TB10110	180
TB10120	180
TB10130	180
TB10140	180
TB10150	180
TB10160	180
TB10180	180
TB10200	180
TB12060	180
TB12070	180
TB12080	180
TB12090	180
TB12100	180
TB12120	180
TB12130	180
TB12140	180
TB12150	180
TB12160	180
TB12180	180

Ref.	page
TB12200	180
TB12220	180
TB12240	180
TB12260	180
TB14100	180
TBA206040	181
TBA206050	181
TBA206060	181
TBA206070	181
TBA208050	181
TBA208060	181
TBA208070	181
TBA208080	181
TBA210080	181
TBR06050	181
TBR06060	181
TBR06070	181
TBR08050	181
TBR08060	181
TBR08070	181
TBR08080	181
TBR10060	181
TBR10080	181
TC2A06060	93
TC2A08060	93
TC2A08080	93
TC2A08100	93
TC2A08120	93
TC2A10065	93
TC2A10080	93
TC2A10100	93
TC2A10115	93
TC2A10135	93
TC2A10160	93
TC6A08080	93
TC6A08100	93
TC6A08120	93
TC6A10100	93
TC6A10120	93
TC6A10140	93
TC6A10160	93
TC6A10200	93
TC6E08080	93
TC6E08100	93
TC6E08120	93
TC6E10100	93
TC6E10120	93
TC6E10140	93
TC6E10160	93
TC6E10200	93
TCA205030	94
TCA206040	94
TCA206060	94
TCA208060	94
TCA208080	94
TCA208100	94
TCCA05025	95
TCCA05030	95
TCCA05035	95
TCCA05050	95
TCCA06035	95
TCCA06040	95
TCCA06050	95
TCCA06060	95
TCCA06070	95
TCCA06080	95
TCCA08060	95
TCCA08080	95
TCCA08100	95
TCCA08120	95

Ref.	page
TCCA08140	95
TCCAEP5030	95
TCCAEP6040	95
TCCC05025	94
TCCC05030	94
TCCC05035	94
TCCC05050	94
TCCC06035	94
TCCC06040	94
TCCC06050	94
TCCC06060	94
TCCC06070	94
TCCC06080	94
TCCC08060	94
TCCC08080	94
TCCC08100	94
TCCC08120	94
TCCC08140	94
TCMA05022	66
TCMA06030	66
TCMA06040	66
TCMA06050	66
TCPA24213	159
TCPA24222	159
TCPA24232	159
TCPB4213	159
TCPB4222	159
TCPB4232	159
TCPN4213	159
TCPN4222	159
TCPN4232	159
TCPZ4213	159
TCPZ4222	159
TCPZ4232	159
TCSO14075	71
TCSO14100	71
TCSO14130	71
TCSO14160	71
TCSO16140	71
TCSO16160	71
TCSO16200	71
TCSO16240	71
TCSP05027	94
TCSP06032	94
TCSP06040	94
TCSPEP05027	94
TCSPEP06032	94
TCSPEP06040	94
TE25050	103
TE25090	103
TECBT10100	171
TECBT10120	171
TECBT10140	171
TECBT10160	171
TECBT10180	171
TECBT10200	171
TECBT10220	171
TECBT10240	171
TECBT10260	171
TECBT10280	171
TECBT10300	171
TECBT60080	171
TECBT60100	171
TECBT60120	171
TECBT60140	171
TECBT60160	171
TECBT60180	171
TECBT60200	171
TECBT80080	171
TECBT80100	171

Ref.	page
TECBT80120	171
TECBT80140	171
TECBT80160	171
TECBT80180	171
TECBT80200	171
TECBT80220	171
TECBT80240	171
TECBT80260	171
TECBT80280	171
TECBT80300	171
TEGA25	268
TEGA33	268
TEGR2530	268
TEMO25	268
TEMO33	268
TEPE2530	268
TEXA250050	169
TEXA250060	169
TEXA250070	169
TEXABM06	171
TEXABM08	171
TEXABM10	171
TEXBP25010	166
TEXBP25012	166
TEXBP25016	166
TEXBP25020	166
TEXBP25025	166
TEXBP30010	166
TEXBP30012	166
TEXBP30015	166
TEXBP30016	166
TEXBP30020	166
TEXBP30025	166
TEXBP30030	166
TEXBP30035	166
TEXBP30040	166
TEXBP30045	166
TEXBP35010	166
TEXBP35012	166
TEXBP35015	166
TEXBP35016	166
TEXBP35020	166
TEXBP35025	166
TEXBP35030	166
TEXBP35035	166
TEXBP35040	166
TEXBP35045	166
TEXBP35050	166
TEXBP40012	166
TEXBP40015	166
TEXBP40016	166
TEXBP40020	166
TEXBP40025	166
TEXBP40030	166
TEXBP40035	166
TEXBP40040	166
TEXBP40045	166
TEXBP40050	166
TEXBP40055	166
TEXBP40060	166
TEXBP40070	166
TEXBP40080	166
TEXBP45016	166
TEXBP45020	166
TEXBP45025	166
TEXBP45030	166
TEXBP45035	166
TEXBP45040	166
TEXBP45045	166
TEXBP45050	166

Ref.	page
TEXBP45060	166
TEXBP45070	166
TEXBP45080	166
TEXBP50025	166
TEXBP50030	166
TEXBP50035	166
TEXBP50040	166
TEXBP50045	166
TEXBP50050	166
TEXBP50060	166
TEXBP50070	166
TEXBP50080	166
TEXBP50090	166
TEXBP50100	166
TEXBP50110	166
TEXBP50120	166
TEXBP60040	166
TEXBP60045	166
TEXBP60050	166
TEXBP60060	166
TEXBP60070	166
TEXBP60080	166
TEXBP60090	166
TEXBP60100	166
TEXBP60110	166
TEXBP60120	166
TEXBT10080	168
TEXBT10100	168
TEXBT10120	168
TEXBT10140	168
TEXBT10160	168
TEXBT10180	168
TEXBT10200	168
TEXBT10220	168
TEXBT10240	168
TEXBT30016	168
TEXBT30020	168
TEXBT30025	168
TEXBT30030	168
TEXBT30035	168
TEXBT30040	168
TEXBT35012	168
TEXBT35016	168
TEXBT35020	168
TEXBT35025	168
TEXBT35030	168
TEXBT35035	168
TEXBT35040	168
TEXBT35045	168
TEXBT35050	168
TEXBT40016	168
TEXBT40020	168
TEXBT40025	168
TEXBT40030	168
TEXBT40035	168
TEXBT40040	168
TEXBT40045	168
TEXBT40050	168
TEXBT40055	168
TEXBT40060	168
TEXBT40070	168
TEXBT45025	168
TEXBT45030	168
TEXBT45035	168
TEXBT45040	168
TEXBT45045	168
TEXBT45050	168
TEXBT45060	168
TEXBT45070	168
TEXBT45080	168

Ref.	page
TEXBT50030	168
TEXBT50035	168
TEXBT50040	168
TEXBT50045	168
TEXBT50050	168
TEXBT50060	168
TEXBT50070	168
TEXBT50080	168
TEXBT50090	168
TEXBT50100	168
TEXBT50120	168
TEXBT60040	168
TEXBT60045	168
TEXBT60050	168
TEXBT60060	168
TEXBT60070	168
TEXBT60080	168
TEXBT60090	168
TEXBT60100	168
TEXBT60110	168
TEXBT60120	168
TEXBT60130	168
TEXBT60140	168
TEXBT60150	168
TEXBT60160	168
TEXBT60180	168
TEXBT60200	168
TEXBT60220	168
TEXBT60240	168
TEXBT60260	168
TEXBT60280	168
TEXBT60300	168
TEXBT80080	168
TEXBT80100	168
TEXBT80120	168
TEXBT80140	168
TEXBT80160	168
TEXBT80180	168
TEXBT80200	168
TEXBT80220	168
TEXBT80240	168
TEXBT80260	168
TEXBT80280	168
TEXBT80300	168
TEXBT80320	168
TEXBT80340	168
TEXBT80360	168
TEXBT80380	168
TEXBT80400	168
TEXZP25010	167
TEXZP25012	167
TEXZP25016	167
TEXZP25020	167
TEXZP25025	167
TEXZP30010	167
TEXZP30012	167
TEXZP30015	167
TEXZP30016	167
TEXZP30020	167
TEXZP30025	167
TEXZP30030	167
TEXZP30035	167
TEXZP30040	167
TEXZP30045	167
TEXZP35010	167
TEXZP35012	167
TEXZP35015	167
TEXZP35016	167
TEXZP35020	167
TEXZP35025	167

Ref.	page
TEXZP35030	167
TEXZP35035	167
TEXZP35040	167
TEXZP35045	167
TEXZP35050	167
TEXZP40012	167
TEXZP40015	167
TEXZP40016	167
TEXZP40020	167
TEXZP40025	167
TEXZP40030	167
TEXZP40035	167
TEXZP40040	167
TEXZP40045	167
TEXZP40050	167
TEXZP40055	167
TEXZP40060	167
TEXZP40070	167
TEXZP40080	167
TEXZP45016	167
TEXZP45020	167
TEXZP45025	167
TEXZP45030	167
TEXZP45035	167
TEXZP45040	167
TEXZP45045	167
TEXZP45050	167
TEXZP45060	167
TEXZP45070	167
TEXZP45080	167
TEXZP50025	167
TEXZP50030	167
TEXZP50035	167
TEXZP50040	167
TEXZP50045	167
TEXZP50050	167
TEXZP50060	167
TEXZP50070	167
TEXZP50080	167
TEXZP50090	167
TEXZP50100	167
TEXZP50110	167
TEXZP50120	167
TEXZP60040	167
TEXZP60045	167
TEXZP60050	167
TEXZP60060	167
TEXZP60070	167
TEXZP60080	167
TEXZP60090	167
TEXZP60100	167
TEXZP60110	167
TEXZP60120	167
TEXZT30016	169
TEXZT30020	169
TEXZT30025	169
TEXZT30030	169
TEXZT30035	169
TEXZT30040	169
TEXZT35012	169
TEXZT35016	169
TEXZT35020	169
TEXZT35025	169
TEXZT35030	169
TEXZT35035	169
TEXZT35040	169
TEXZT35045	169
TEXZT35050	169
TEXZT40016	169
TEXZT40020	169

Ref.	page
TEXZT40025	169
TEXZT40030	169
TEXZT40035	169
TEXZT40040	169
TEXZT40045	169
TEXZT40050	169
TEXZT40055	169
TEXZT40060	169
TEXZT40070	169
TEXZT45030	169
TEXZT45035	169
TEXZT45040	169
TEXZT45050	169
TEXZT45060	169
TEXZT45070	169
TEXZT45080	169
TEXZT50030	169
TEXZT50035	169
TEXZT50040	169
TEXZT50045	169
TEXZT50050	169
TEXZT50060	169
TEXZT50070	169
TEXZT50080	169
TEXZT50090	169
TEXZT50100	169
TEXZT60050	169
TEXZT60060	169
TEXZT60070	169
TEXZT60080	169
TEXZT60090	169
TEXZT60100	169
TEXZT60110	169
TEXZT60120	169
TEXZT60130	169
TEXZT60140	169
TEXZT60150	169
TEXZT60160	169
TEXZT60180	169
TEXZT60200	169
TEXZT60220	169
TEXZT60240	169
TEXZT60260	169
TEXZT60280	169
TEXZT60300	169
TFE05040	51
TFE05050	51
TFE05060	51
TFE05080	51
TFE05100	51
TFE06040	51
TFE06050	51
TFE06060	51
TFE06070	51
TFE06080	51
TFE06100	51
TFE06120	51
TFE08055	51
TFE08060	51
TFE08070	51
TFE08080	51
TFE08090	51
TFE08100	51
TFE08110	51
TFE08120	51
TFE08140	51
TFE10060	51
TFE10070	51
TFE10080	51
TFE10090	51

Ref.	page
TFE10100	51
TFE10120	51
TFE10140	51
TFE12080	51
TFE12090	51
TFE12110	51
TFE12130	51
TFE12150	51
TFE14080	51
TFE14100	51
TFE14120	51
TFE14130	51
TFE14140	51
TFE14160	51
TFE18100	51
TFE18130	51
TFE18160	51
TFE18180	51
TFE18200	51
TFF06035	52
TFF06055	52
TFI4825	185
TFI4835	185
TFI4845	185
TFI4855	185
TFI4865	185
TFI4875	185
TFI4890	185
TFM06035	52
TFM06055	52
TFN14080	51
TFS06100	52
TFS06120	52
TFS08110	52
TFS08130	52
TFS10120	52
TFS10140	52
TFUXE10080	92
TFUXE10100	92
TFUXE10120	92
TG230620	288
TG230820	288
TG230830	288
TG340830	288
TG341030	288
TGR230620	288
TGR230820	288
TGR230830	288
TGR340830	288
TGR341030	288
TGRX0830	291
TGRX0860	291
TGRX1030	291
TGRX1060	291
TGX0840	291
TGX0860	291
TGX1040	291
TGX1060	291
THA05040	50
THA05060	50
THA05080	50
THA05100	50
THA06045	50
THA06050	50
THA06060	50
THA06080	50
THA06120	50
THA06140	50
THA08060	50
THA08080	50

Ref.	page
THA08100	50
THA08120	50
THA10100	50
THA10120	50
THE05040	49
THE05050	49
THE05060	49
THE05080	49
THE05100	49
THE06040	49
THE06050	49
THE06060	49
THE06070	49
THE06080	49
THE06100	49
THE06120	49
THE08055	49
THE08060	49
THE08070	49
THE08080	49
THE08090	49
THE08100	49
THE08110	49
THE08120	49
THE08140	49
THE10060	49
THE10070	49
THE10080	49
THE10090	49
THE10100	49
THE10120	49
THE10140	49
THE12080	49
THE12090	49
THE12110	49
THE12130	49
THE12150	49
THE14080	49
THE14100	49
THE14120	49
THE14130	49
THE14140	49
THE14160	49
THE18100	49
THE18130	49
THE18160	49
THE18180	49
THE18200	49
THP05040	50
THP05060	50
THP06040	50
THP06050	50
THP06060	50
THP06080	50
THP06100	50
THP08060	50
THP08080	50
THT06040	50
THT06050	50
THT06060	50
TMVR06065	314
TMVR07065	314
TMVR08065	314
TN4S05	96
TN4S06	96
TN4S06EP	96
TN4S06L	97
TN4S08	96
TN4S08EP	96
TN4S08L	97

Ref.	page
TN4S10	96
TN4S10EP	96
TN4S10L	97
TN4S12	96
TN4S14	96
TNUX08060	92
TNUX08080	92
TNUX08100	92
TNUX08120	92
TNUX10060	92
TNUX10080	92
TNUX10100	92
TNUX10120	92
TNUX10140	92
TNUXA08060	91
TNUXA08080	91
TNUXA08100	91
TNUXA08120	91
TNUXA10060	91
TNUXA10080	91
TNUXA10100	91
TNUXA10120	91
TNUXA10140	91
TNUXA10160	91
TNUXA10180	91
TNUXA10200	91
TNUXA10230	91
TNUXE08060	91
TNUXE08080	91
TNUXE08100	91
TNUXE08120	91
TNUXE10060	91
TNUXE10080	91
TNUXE10100	91
TNUXE10120	91
TNUXE10140	91
TNUXE10160	91
TNUXE10180	91
TNUXE10200	91
TNUXE10230	91
TNUXT10080	92
TNUXT10100	92
TNUXT10120	92
TNUXT10140	92
TNUXT10160	92
TNXA408080	91
TNXA408100	91
TNXA408120	91
TNXA410080	91
TNXA410100	91
TNXA410120	91
TNXA410140	91
TNXE408080	92
TNXE408100	92
TNXE410080	92
TNXE410100	92
TNXE410120	92
TNXE410140	92
TPA230016	179
TPA230025	179
TPA235020	179
TPA235025	179
TPA235030	179
TPA235040	179
TPA240030	179
TPA240040	179
TPA240050	179
TPA245030	179
TPA245050	179
TPA250050	179

Ref.	page
TPA250070	179
TPAP352000	299
TPAR251500	299
TPBLANC	54
TPCR042BL	229
TPCR042NE	229
TPCR048BL	229
TPCR048NE	229
TPCR055BL	229
TPCR055NE	229
TPMARRO	54
TPPO25010	174
TPPO25012	174
TPPO25016	174
TPPO25020	174
TPPO25025	174
TPPO30012	174
TPPO30016	174
TPPO30020	174
TPPO30025	174
TPPO30030	174
TPPO30040	174
TPPO35016	174
TPPO35020	174
TPPO35025	174
TPPO35030	174
TPPO35035	174
TPPO35040	174
TPPO35050	174
TPPO40016	174
TPPO40020	174
TPPO40025	174
TPPO40030	174
TPPO40035	174
TPPO40040	174
TPPO40045	174
TPPO40050	174
TPPO40060	174
TPPO40070	174
TPPO45020	174
TPPO45025	174
TPPO45030	174
TPPO45035	174
TPPO45040	174
TPPO45045	174
TPPO45050	174
TPPO45060	174
TPPO45070	174
TPPO45080	174
TPPO50020	174
TPPO50025	174
TPPO50030	174
TPPO50035	174
TPPO50040	174
TPPO50045	174
TPPO50050	174
TPPO50060	174
TPPO50070	174
TPPO50080	174
TPPO50090	174
TPPO50100	174
TPPO50120	174
TPPO60040	174
TPPO60050	174
TPPO60060	174
TPPO60070	174
TPPO60080	174
TPPO60090	174
TPPO60100	174
TPPO60110	174
TPPO60120	174
TPPO60130	174
TPPO60140	174
TPPO60150	174
TPPO60160	174
TPPO60180	174
TPPO60200	174
TPPO60220	174
TPPOZ25010	176
TPPOZ25012	176
TPPOZ25016	176
TPPOZ25020	176
TPPOZ25025	176
TPPOZ30012	176
TPPOZ30016	176
TPPOZ30020	176
TPPOZ30025	176
TPPOZ30030	176
TPPOZ30040	176
TPPOZ35016	176
TPPOZ35020	176
TPPOZ35025	176
TPPOZ35030	176
TPPOZ35035	176
TPPOZ35040	176
TPPOZ35050	176
TPPOZ40016	176
TPPOZ40020	176
TPPOZ40025	176
TPPOZ40030	176
TPPOZ40035	176
TPPOZ40040	176
TPPOZ40045	176
TPPOZ40050	176
TPPOZ40060	176
TPPOZ40070	176
TPPOZ45020	176
TPPOZ45025	176
TPPOZ45030	176
TPPOZ45035	176
TPPOZ45040	176
TPPOZ45045	176
TPPOZ45050	176
TPPOZ45060	176
TPPOZ45070	176
TPPOZ45080	176
TPPOZ50020	176
TPPOZ50025	176
TPPOZ50030	176
TPPOZ50035	176
TPPOZ50040	176
TPPOZ50045	176
TPPOZ50050	176
TPPOZ50060	176
TPPOZ50070	176
TPPOZ50080	176
TPPOZ50090	176
TPPOZ50100	176
TPPOZ50120	176
TPPOZ60040	176
TPPOZ60050	176
TPPOZ60060	176
TPPOZ60070	176
TPPOZ60080	176
TPPOZ60090	176
TPPOZ60100	176
TPPOZ60110	176
TPTO30025	178
TPTO30030	178
TPTO35015	178
TPTO35017	178
TPTO35020	178
TPTO35025	178
TPTO35030	178
TPTO35040	178
TPTO35050	178
TPTO40020	178
TPTO40025	178
TPTO40030	178
TPTO40035	178
TPTO40040	178
TPTO40045	178
TPTO40050	178
TPTO40060	178
TPTO40070	178
TPTO45030	178
TPTO45035	178
TPTO45040	178
TPTO45045	178
TPTO45050	178
TPTO45060	178
TPTO45070	178
TPTO50030	178
TPTO50035	178
TPTO50040	178
TPTO50045	178
TPTO50050	178
TPTO50060	178
TPTO50070	178
TPTO50080	178
TPTO50090	178
TPTO50100	178
TPTO50120	178
TPTO60060	178
TPTO60070	178
TPTO60080	178
TPTO60090	178
TPTO60100	178
TPTO60110	178
TPTO60120	178
TPTO60130	178
TPTO60140	178
TPTO60150	178
TPTO60160	178
TPTO60180	178
TPTO60200	178
TPTO60220	178
TPTPADBE	229
TPTPADBL	229
TPTPADCA	229
TPTPADCE	229
TPTPADGR	229
TPTPADHA	229
TPTPADNE	229
TPTPADNO	229
TPTPADPI	229
TPTPADRO	229
TPTPADSA	229
TR13200200	129
TR13300300	129
TR13400400	129
TR13500500	129
TR13600600	129
TR15200200	129
TR15300300	129
TR15400400	129
TR15500500	129
TR15600600	129
TRA6050	70
TRA6060	70
TRA6080	70
TRA8070	70
TRA8090	70
TRA8110	70
TRA8130	70
TRA8150	70
TRAV0411	115
TRAV0513	115
TRAV0616	115
TRAV0819	115
TRAV1021	115
TRBL200200	129
TRBL300300	129
TRBL400400	129
TRBL500500	129
TRBL600600	129
TRCA0310	115
TRCA0410	115
TRCA0411	115
TRCA0512	115
TRCA0515	115
TRCA0614	115
TRCA0616	115
TRCA0816	115
TRCA0818	115
TRCA1017	115
TRCA1022	115
TRCA1223	115
TRCR0410	115
TRCR0511	115
TRCR0614	115
TRCR0815	115
TRCR1019	115
TREPV05050	183
TREPV07050	183
TREZ05050	183
TREZ07050	183
TRPO30016	179
TRPO30020	179
TRPO35016	179
TRPO35020	179
TRPO35025	179
TRPO35030	179
TRPO35035	179
TRPO40016	179
TRPO40020	179
TRPO40025	179
TRPO40030	179
TRPO40035	179
TRPO40040	179
TRPO40050	179
TRPO45016	179
TRPO45020	179
TRPO45025	179
TRPO45030	179
TRPO45035	179
TRPO45040	179
TRPO45045	179
TRPO50020	179
TRPO50030	179
TRPO50040	179
TRPO50050	179
TRPXS412515	299
TSGA06	118
TSGA08	118
TSGA10	118
TSGA12	118
TSGA14	118
TSGA16	118
TSGA20	118
TSGA22	118
TSGA24	118
TSGA30	118
TSGA36	118
TUG201006	288
TUG201008	288
TUG271808	288
TUG271810	288
TUGRA2706	289
TUGRA2708	289
TUGRA3808	289
TUGRA3810	289
TUGX08	291
TUGX10	291
TUGXMU08	292
TUGXMU10	292
TUMAM03	224
TUMAM04	224
TUMAM05	224
TUMAM06	224
TUMAM08	224
TUMAM10	224
TUMAM12	224
TUMAM14	224
TUMAM16	224
TURX08	292
TURX10	292
TURX12	292
TURXA08	292
TURXA10	292
TURXA208	292
TWA06060	47
TZN812909	157
TZN813513	157
TZN813516	157
TZN813519	157
TZN813525	157
TZN814216	157
TZN814219	157
TZN814225	157
TZN814232	157
TZN814238	157
TZN814816	157
TZN814819	157
TZN814822	157
TZN814825	157
TZN814838	157
TZN814850	157
UNCO3220	294
UNEX412103	293
UNPX412101	293
UNPX412102	293
UNPX412103	293
UNPX412104	293
UNTX412104	293
VABE144819	143
VABE144825	143
VABE164819	143
VABE165522	143
VABE165525	143
VABE165532	143
VABE165538	143
VABE165550	143
VABE166325	143
VABE166332	143
VABE166338	143
VABE3509	142
VABE3513	142
VABE4213	142
VABE4216	142
VABE4219	142
VABE4225	142
VABE4232	142
VABE4813	142
VABE4816	142
VABE4819	142
VABE4825	142
VABE4832	142
VABE4838	142
VABE5519	142
VABE5522	142
VABE5525	142
VABE5532	142
VABE5538	142
VABE5550	142
VABE5563	142
VABE6319	142
VABE6325	142
VABE6332	142
VABE6338	142
VABE6350	142
VABE6363	142
VABP3513	153
VABP3516	153
VABP3519	153
VABP3525	153
VABP3913	153
VABP3916	153
VABP3919	153
VABP3925	153
VABP3938	153
VABP4213	153
VABP4216	153
VABP4219	153
VABP4225	153
VABP4232	153
VABP4238	153
VABP4816	153
VABP4819	153
VABP4825	153
VABP4832	153
VABP4838	153
VABP5532	153
VABR3509	150
VABR3511	150
VABR3513	150
VABR3516	150
VABR3519	150
VABR3525	150
VABR3913	150
VABR3916	150
VABR3919	150
VABR3925	150
VABR3932	150
VABR4213	150
VABR4216	150
VABR4219	150
VABR4222	150
VABR4225	150
VABR4232	150
VABR4238	150
VABR4250	150
VABR4813	150
VABR4816	150
VABR4819	150
VABR4822	150
VABR4825	150
VABR4832	150
VABR4838	150
VABR4845	150

Ref.	page
VABR4850	150
VABR4860	150
VABR4880	150
VABR5532	150
VACHA08C	61
VACHA10C	61
VACHG08C	60
VACHG10C	60
VACHT08C	57
VACHT08L	57
VACHT10C	57
VACHT10L	57
VACHT12C	57
VACHT12L	57
VACHT16C	57
VACHTA208C	57
VACHTA208L	57
VACHTA210C	57
VACHTA210L	57
VACHTA212C	57
VACHTA212L	57
VALHA14025	191
VALHA16030	191
VALHA17040	191
VALHA18040	191
VALHA18050	191
VALHA19050	191
VALHA19060	191
VALHA19070	191
VALHA20050	191
VALHA20060	191
VALHA20070	191
VALHA20080	191
VALHA21070	191
VALHA21080	191
VALHA21090	191
VALHA21100	191
VALHA22110	191
VALHA22120	191
VALHA23130	191
VALHAB16030	191
VALHAB17040	191
VALHAB18050	191
VALHAB19060	191
VALHC14025	190
VALHC16030	190
VALHC17040	190
VALHC18040	190
VALHC18050	190
VALHC19050	190
VALHC19060	190
VALHC19070	190
VALHC20050	190
VALHC20060	190
VALHC20070	190
VALHC20080	190
VALHC21070	190
VALHC21080	190
VALHC21090	190
VALHC21100	190
VALHC22110	190
VALHC22120	190
VALHC23130	190
VALRE25020	188
VALRE25030	188
VALRE35040	188
VALRE35050	188
VALRE40060	188
VALRE40070	188
VALRE40080	188

Ref.	page
VALRO14025	189
VALRO16030	189
VALRO17040	189
VALRO18040	189
VALRO18050	189
VALRO19050	189
VALRO19060	189
VALRO19070	189
VALRO20060	189
VALRO20070	189
VALRO20080	189
VALRO21080	189
VALRO21090	189
VALRO22100	189
VALRO22110	189
VALRO22120	189
VALRO23130	189
VALROB16030	189
VALROB17040	189
VALROB18050	189
VALROB19060	189
VAM06060	47
VAM08075	47
VAM08090	47
VAM10070	47
VAM10090	47
VAM10120	47
VAM12090	47
VAM12110	47
VARANE14	148
VARANE16	148
VARANE18	148
VARANE25	148
VBAESM04	106
VBAESM05	106
VBAESM06	106
VBAGAM04	106
VBAGAM05	106
VBAGAM06	106
VCABA004	106
VCABA005	106
VCABA006	106
VCAPA004	107
VCAPA005	107
VCAPA006	107
VCFBL	194
VD12503	221
VD12504	221
VD12505	221
VD12506	221
VD12508	221
VD12510	221
VD12512	221
VD125IM04	221
VD125IM05	221
VD125IM06	221
VD125IM08	221
VD125IM10	221
VD12704	223
VD12705	223
VD12706	223
VD12708	223
VD12710	223
VD12712	223
VD158704	220
VD158705	220
VD158706	220
VD158708	220
VD158710	220
VD158712	220

Ref.	page
VD603905020	214
VD603905030	214
VD603905040	214
VD603905050	214
VD603906016	214
VD603906020	214
VD603906030	214
VD603906040	214
VD603906050	214
VD603906060	214
VD603906070	214
VD603906080	214
VD603908025	214
VD603908030	214
VD603908040	214
VD603908050	214
VD603908060	214
VD603908070	214
VD603908080	214
VD603908090	214
VD603908100	214
VD603910025	214
VD603910030	214
VD603910040	214
VD603910050	214
VD603910060	214
VD603910070	214
VD603910080	214
VD902103	222
VD902104	222
VD902105	222
VD902106	222
VD902108	222
VD902110	222
VD902112	222
VD9021IM04	222
VD9021IM05	222
VD9021IM06	222
VD9021IM08	222
VD9021IM10	222
VD91204010	213
VD91204012	213
VD91204020	213
VD91204030	213
VD91204040	213
VD91204050	213
VD91205010	213
VD91205012	213
VD91205016	213
VD91205020	213
VD91205025	213
VD91205030	213
VD91205040	213
VD91205050	213
VD91206010	213
VD91206012	213
VD91206016	213
VD91206020	213
VD91206025	213
VD91206030	213
VD91206040	213
VD91206050	213
VD91206060	213
VD91208010	213
VD91208016	213
VD91208020	213
VD91208030	213
VD91208040	213
VD91208050	213
VD91208060	213

Ref.	page
VD93106030	211
VD93106040	211
VD93106050	211
VD93106060	211
VD93106070	211
VD93108030	211
VD93108040	211
VD93108050	211
VD93108060	211
VD93108070	211
VD93108080	211
VD93110040	211
VD93110050	211
VD93110060	211
VD93110070	211
VD93110080	211
VD93112050	211
VD93112060	211
VD93112070	211
VD93112080	211
VD93304008	209
VD93304010	209
VD93304012	209
VD93304016	209
VD93304020	209
VD93304025	209
VD93304030	209
VD93304040	209
VD93304050	209
VD93304060	209
VD93305010	209
VD93305012	209
VD93305016	209
VD93305020	209
VD93305025	209
VD93305030	209
VD93305040	209
VD93305050	209
VD93305060	209
VD93305070	209
VD93306016	209
VD93306020	209
VD93306025	209
VD93306030	209
VD93306040	209
VD93306050	209
VD93306060	209
VD93306070	209
VD93308016	209
VD93308020	209
VD93308025	209
VD93308030	209
VD93308040	209
VD93308050	209
VD93308060	209
VD93308070	209
VD93308080	209
VD93308100	209
VD93310020	209
VD93310030	209
VD93310040	209
VD93310050	209
VD93310060	209
VD93310070	209
VD93310080	209
VD93312030	209
VD93312040	209
VD93312050	209
VD93312060	209
VD93312070	209

Ref.	page
VD933I04010	210
VD933I04016	210
VD933I04020	210
VD933I04030	210
VD933I04040	210
VD933I05010	210
VD933I05016	210
VD933I05020	210
VD933I05030	210
VD933I05040	210
VD933I05050	210
VD933I06010	210
VD933I06016	210
VD933I06020	210
VD933I06025	210
VD933I06030	210
VD933I06040	210
VD933I06050	210
VD933I08016	210
VD933I08020	210
VD933I08025	210
VD933I08030	210
VD933I08040	210
VD933I08050	210
VD933I08060	210
VD933I10020	210
VD933I10030	210
VD933I10040	210
VD933I10050	210
VD933I10060	210
VD93403	218
VD93404	218
VD93405	218
VD93406	218
VD93408	218
VD93410	218
VD93412	218
VD934IM04	218
VD934IM05	218
VD934IM06	218
VD934IM08	218
VD934IM10	218
VD985IM04	219
VD985IM05	219
VD985IM06	219
VD985IM08	219
VD985IM10	219
VDZ98503	219
VDZ98504	219
VDZ98505	219
VDZ98506	219
VDZ98508	219
VDZ98510	219
VDZ98512	219
VGMZ10016	194
VGMZ15026	194
VGMZ19035	194
VHENOM06	64
VHENOM08	64
VINCO432	108
VINCO438	108
VINCO446	108
VINCO537	108
VINCO552	108
VINCO637	108
VINCO652	108
VINVN7060	182
VINVN7070	182
VINVZ7060	181

Ref.	page
VINVZ7070	181
VMAE0630	311
VMAE0825	311
VMAE1030	311
VMAR0420	312
VMAR0630	312
VMAR0830	312
VMAR1030	312
VMI08075	45
VMI08090	45
VMI10070	45
VMI10090	45
VMI10120	45
VMI12110	45
VMIA408075	44
VMIA410090	44
VMIA412110	44
VMPF050	206
VPACC15015	193
VPACC15020	193
VPACC15025	193
VPACC20025	193
VPACC20030	193
VPACC20035	193
VPACC20040	193
VPACC20045	193
VPACC20050	193
VPAESM04	107
VPAESM05	107
VPAESM06	107
VPAGAM04	107
VPAGAM05	107
VPAGAM06	107
VPL35025	124
VPL35035	124
VPL35045	124
VRECA4010	113
VRECA4012	113
VRECA4016	113
VRECA4810	113
VRECA4812	113
VRECA4814	113
VRECA4816	113
VRECA4818	113
VREFL4835	114
VRENO3206	112
VRENO3208	112
VRENO3210	112
VRENO3212	112
VRENO3214	112
VRENO3218	112
VRENO4006	112
VRENO4008	112
VRENO4010	112
VRENO4012	112
VRENO4014	112
VRENO4016	112
VRENO4018	112
VRENO4020	112
VRENO4808	112
VRENO4810	112
VRENO4812	112
VRENO4814	112
VRENO4816	112
VRENO4818	112
VRENO4820	112
VRENO4822	112
VRENO4824	112
VRENO4830	112
VRENO4835	112

Ref.	page
VRSE06020	311
VRSE06030	311
VRSE08020	311
VRSE08030	311
VRSE10030	311
VRSE12030	311
VSVCBL	195
VSVCMA	195
VSVNB01	195
VSVNB02	195
VSVNM01	195
VSVNM02	195
VT8135009	157
VT8135013	157
VT8135016	157
VT8135019	157
VT8135025	157
VT8139009	157
VT8139013	157
VT8139016	157
VT8139019	157
VT8139022	157
VT8139025	157
VT8142009	157
VT8142013	157
VT8142016	157
VT8142019	157
VT8142022	157
VT8142025	157
VT8142032	157
VT8142038	157
VT8142050	157
VT8148009	157
VT8148013	157
VT8148016	157
VT8148019	157
VT8148025	157
VT8148032	157
VT8148038	157
VT8148045	157
VT8148050	157
VT8148060	157
VT8148070	157
VT8148080	157
VT8155019	157
VT8155025	157
VT8155032	157
VT8155038	157
VT8235009	158
VT8235013	158
VT8235016	158
VT8235019	158
VT8235025	158
VT8239016	158
VT8239019	158
VT8239022	158
VT8239025	158
VT8242016	158
VT8242019	158
VT8242025	158
VT8242032	158
VT8248019	158
VT8248025	158
VT8248032	158
VT8248038	158
VT8255032	158
VT8255038	158
VT9650306Z	217
VT9650310Z	217
VT9650408Z	217
VT9650410Z	217
VT9650416Z	217
VT9650420Z	217
VT9650425Z	217
VT9650430Z	217
VT9650510Z	217
VT9650516Z	217
VT9650520Z	217
VT9650530Z	217
VT9650540Z	217
VT9650610Z	217
VT9650616Z	217
VT9650620Z	217
VT9650630Z	217
VT9850306Z	216
VT9850310Z	216
VT9850316Z	216
VT9850320Z	216
VT9850330Z	216
VT9850406Z	216
VT9850408Z	216
VT9850410Z	216
VT9850416Z	216
VT9850420Z	216
VT9850506Z	216
VT9850510Z	216
VT9850512Z	216
VT9850516Z	216
VT9850520Z	216
VT9850530Z	216
VT9850540Z	216
VT9850550Z	216
VT9850610Z	216
VT9850612Z	216
VT9850616Z	216
VT9850620Z	216
VT9850630Z	216
VT9850640Z	216
VT9850650Z	216
VT9850660Z	216
VTALAM06	65
VTALAM08	65
VTALAM10	65
VTB05040	180
VTB05050	180
VTB06040	180
VTB06050	180
VTB06060	180
VTB07050	180
VTB07060	180
VTB07070	180
VTB07080	180
VTB08050	180
VTB08060	180
VTB08070	180
VTB08080	180
VTB08090	180
VTB08100	180
VTB10070	180
VTB10080	180
VTB10090	180
VTB10100	180
VTBTS08	97
VTBTS10	97
VTBTS12	97
VTCCA05025	95
VTCCA05030	95
VTCCA05035	95
VTCCA05050	95
VTCCA06035	95
VTCCA06040	95
VTCCA06050	95
VTCCA06060	95
VTCCA06070	95
VTCCA08060	95
VTCCA08080	95
VTEXA250050	169
VTEXA250060	169
VTEXA250070	169
VTEXBP30016	166
VTEXBP30020	166
VTEXBP30025	166
VTEXBP30030	166
VTEXBP30040	166
VTEXBP35016	166
VTEXBP35020	166
VTEXBP35025	166
VTEXBP35030	166
VTEXBP35035	166
VTEXBP35040	166
VTEXBP35050	166
VTEXBP40025	166
VTEXBP40030	166
VTEXBP40035	166
VTEXBP40040	166
VTEXBP40045	166
VTEXBP40050	166
VTEXBP40060	166
VTEXBP45030	166
VTEXBP45035	166
VTEXBP45040	166
VTEXBP45045	166
VTEXBP45050	166
VTEXBP45060	166
VTEXBP45070	166
VTEXBP50030	166
VTEXBP50035	166
VTEXBP50040	166
VTEXBP50050	166
VTEXBP50060	166
VTEXBP50070	166
VTEXBP50080	166
VTEXBP50090	166
VTEXBP60050	166
VTEXBP60060	166
VTEXBP60070	166
VTEXBP60080	166
VTEXZP30016	167
VTEXZP30020	167
VTEXZP30025	167
VTEXZP30030	167
VTEXZP30040	167
VTEXZP35016	167
VTEXZP35020	167
VTEXZP35025	167
VTEXZP35030	167
VTEXZP35035	167
VTEXZP35040	167
VTEXZP35050	167
VTEXZP40025	167
VTEXZP40030	167
VTEXZP40035	167
VTEXZP40040	167
VTEXZP40045	167
VTEXZP40050	167
VTEXZP40060	167
VTEXZP45030	167
VTEXZP45035	167
VTEXZP45040	167
VTEXZP45045	167
VTEXZP45050	167
VTEXZP45060	167
VTEXZP45070	167
VTEXZP50030	167
VTEXZP50035	167
VTEXZP50040	167
VTEXZP50045	167
VTEXZP50050	167
VTEXZP50060	167
VTEXZP50070	167
VTEXZP50080	167
VTEXZP60050	167
VTEXZP60060	167
VTEXZP60070	167
VTEXZP60080	167
VTNUXA08080	91
VTNUXA08100	91
VTNUXA10080	91
VTNUXA10100	91
VTNUXE08080	91
VTNUXE08100	91
VTNUXE10080	91
VTNUXE10100	91
VTPOZ30025	177
VTPOZ30030	177
VTPOZ35016	177
VTPOZ35020	177
VTPOZ35025	177
VTPOZ35030	177
VTPOZ35035	177
VTPOZ35040	177
VTPOZ35050	177
VTPOZ40016	177
VTPOZ40020	177
VTPOZ40025	177
VTPOZ40030	177
VTPOZ40035	177
VTPOZ40040	177
VTPOZ40045	177
VTPOZ40050	177
VTPOZ40060	177
VTPOZ45030	177
VTPOZ45035	177
VTPOZ45040	177
VTPOZ45045	177
VTPOZ45050	177
VTPOZ45060	177
VTPOZ45070	177
VTPOZ50030	177
VTPOZ50035	177
VTPOZ50040	177
VTPOZ50050	177
VTPOZ50060	177
VTPOZ50070	177
VTPOZ50080	177
VTPOZ50090	177
VTPOZ60060	177
VTPOZ60070	177
VTPOZ60080	177
VTPPO30016	175
VTPPO30020	175
VTPPO30025	175
VTPPO30030	175
VTPPO30040	175
VTPPO35016	175
VTPPO35020	175
VTPPO35025	175
VTPPO35030	175
VTPPO35035	175
VTPPO35040	175
VTPPO35050	175
VTPPO40016	175
VTPPO40020	175
VTPPO40025	175
VTPPO40030	175
VTPPO40035	175
VTPPO40040	175
VTPPO40045	175
VTPPO40050	175
VTPPO40060	175
VTPPO45030	175
VTPPO45035	175
VTPPO45040	175
VTPPO45045	175
VTPPO45050	175
VTPPO45060	175
VTPPO45070	175
VTPPO50030	175
VTPPO50035	175
VTPPO50040	175
VTPPO50050	175
VTPPO50060	175
VTPPO50070	175
VTPPO50080	175
VTPPO50090	175
VTPPO60040	175
VTPPO60050	175
VTPPO60060	175
VTPPO60070	175
VTPPO60080	175
VTPPOTS05	97
VTPPOTS06	97
VTPPOTS08	97
VTPTO30025	178
VTPTO30030	178
VTPTO35015	178
VTPTO35020	178
VTPTO35025	178
VTPTO35030	178
VTPTO35040	178
VTPTO35050	178
VTPTO40020	178
VTPTO40025	178
VTPTO40030	178
VTPTO40035	178
VTPTO40040	178
VTPTO40045	178
VTPTO40050	178
VTPTO40060	178
VTPTO45030	178
VTPTO45035	178
VTPTO45040	178
VTPTO45045	178
VTPTO45050	178
VTPTO45060	178
VTPTO45070	178
VTPTO50030	178
VTPTO50035	178
VTPTO50040	178
VTPTO50050	178
VTPTO50060	178
VTPTO50070	178
VTPTO50080	178
VTPTO50090	178
VTPTO60060	178
VTPTO60070	178
VTPTO60080	178
VTREPV05050	183
VTREPV07050	183
VTREZ05050	183
VTREZ07050	183
VTUMAM03	224
VTUMAM04	224
VTUMAM05	224
VTUMAM06	224
VTUMAM08	224
VTUMAM10	224
VTUMAM12	224
ZP06C40	66
ZP08C15	66
ZP08C45	66
ZP10C50	66
ZP10C80	66
ZP12C15	66
ZP12C65	66
ZT06L10	66
ZT06L30	66
ZT08L15	66
ZT08L35	66
ZT08L45	66
ZT10L10	66
ZT10L30	66
ZT10L50	66
ZT10L80	66
ZT12L15	66
ZT12L45	66
ZT12L65	66

A PERFECT FIXING

CATINDEN22

INDEX®
A PERFECT FIXING

Técnicas Expansivas S.L.
P. I. La Portalada II, C/ Segador, 13
26006 · Logroño (La Rioja) · SPAIN

T. (+34) 941.272.131 · E. info@indexfix.com
www.indexfix.com