TO-GU

TU-GU

TU-GRA

TO-GR

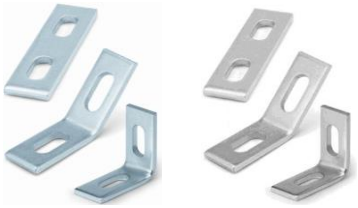

EG-Z / EG-A2

PG-Z / PG-A2

PU-Z

SO-TP

SO-PG

CHARACTERISTICS

- Different accessories for support guides that offer a wide variety of installation methods.
- Compatible with the clamp range from the catalogue, both for piping and electrical needs.
- Ideal for specialized installers in this field.
- In a variety of materials:
    - Galvanized: for supporting electrical installations or simple indoor/outdoor fluid installations with moderate corrosion.
    - Stainless steel: For outdoor use or in humid or pollutant (chlorine-free) industrial environments.
    - PVC: for light loads. Easy installation (may be cut without tools) and good resistance to chemical agents in general.

BASE MATERIAL

APPLICATION EXAMPLES

Channels and cantilevers for electrical and telecommunication installations and piping.

Cable tray supports.

Accessories which complement basic equipment.

1. GAMA

ITEM	PHOTO	REFERENCE	DESCRIPTION	MATERIAL	COATING
1		TG230620 TG230820 TG230830 TG340830 TG41030	Channel stud nut	Steel	Zinc-plated ≥ 5µm
2		TUG201006 TUG201008 TUG271808 TUG271810	Channel nut	Steel	Zinc-plated ≥ 5µm
3		TUGRA2706 TUGRA2708 TUGRA3808 TUGRA3810	Fast nut-guide with washer	Steel	Zinc-plated ≥ 5µm
4		TGR230620 TGR230820 TGR230830 TGR340830 TGR341030	Fast-fixing stop screw	Steel	Zinc-plated ≥ 5µm
5	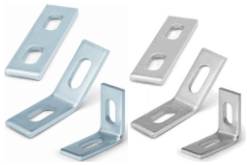	EMZ45 EMZ90 EMZ00 EMI45 EMI90 EMI00	Zinc-plated and stainless steel brackets	Steel Stainless steel A2	Zinc-plated ≥ 5µm
6		PGZ2718 PGZ2830 PGZ3840 PGI2718 PGI2830 PGI3840	Zinc-plated and stainless steel U-fitting	Steel Stainless steel A2	Zinc-plated ≥ 5µm
7		PUZ2718 PUZ3840	Union plates for profiles	Steel	Zinc-plated ≥ 5µm
8		SOTP2718 SOTP2830 SOTP3840 SOTP4121 SOTP4141	Plastic cap for framing systems	Polypropylene	--
9		SOPG27 SOPG38 SOPG41	Isophonic rubber profile	EPDM	--

2. COMPATIBILITY TABLE.

				CHANNEL CANTILEVER ARMS						CHANNEL BRACKETS						CHANNEL U-FITTINGS						CHANNEL STUD NUTS										CHANNEL NUTS								PLASTIC CAPS			
				SPV2718	SPV3840	SPH2718	SPH3840	SPGH2718	SPGH3840	EMZ45	EMZ90	EMZ00	EMI45	EMI90	EMI00	GZZ718	PGZ2830	PGZ3840	PGI2718	PGI2830	PGI3840	TG230620	TG230820	TG230830	TG340830	TG341030	TGR230620	TGR230820	TGR230830	TGR340830	TGR341030	TUG201006	TUG201008	TUG271808	TUG271810	TUGRA2706	TUGRA2708	TUGRA3808	TUGRA3810	SOTP2718	SOTP2830	SOTP3840	SOTP4121
	Code	Measure (mm)	Length (mm)	Vertical M10	Vertical M10	Horizontal M10	Horizontal M10	Horizontal	Horizontal	45º	90º	Plana	45º stainless	90º stainless	Stainless flat							M6 x 20	M8 x 20	M8 x 30	M8 x 30	M10 x 30	M60 x 20	M8 x 20	M8 x 30	M8 x 30	M10 x 30	M6	M8	M8	M10	M6	M8	M8	M10				
SLOTTED STRUT CHANNELS	GPZ201010	20X10X1	2000																			●										●	●										
	GPZ250808	25X8X0,8	1000																			●										●	●										
	GPG271812	27x18x1,25	2000	●		●		●		●	●	●				●						●	●	●			●	●	●			●	●	●	●	●	●			●			
	GPG283018	28x30x1,8	2000	●		●		●		●	●	●					●						●	●			●	●	●			●	●	●	●	●	●				●		
	GPG351312	35x13x1,2	2000							●	●	●																															
	GPG384020	38x40x2	2000		●		●		●	●	●	●						●							●	●				●	●			●	●			●	●			●	
	GPG402015	40x40x1,5	2000		●		●		●	●	●	●													●	●				●	●			●	●			●	●				●
	GPI271812	27x18x1,25	2000										●	●	●				●			●	●	●								●	●	●	●					●			
	GPI283015	28x30x1,8	2000										●	●	●					●			●	●								●	●	●	●						●		
	GPI384020	38x40x2	2000										●	●	●						●				●	●								●	●							●	
	GPP271812	27x18x1,25	1000	●		●				●	●	●				●						●	●	●								●	●	●	●					●			
	GPV251120	25x11x2	1000							●	●	●										●										●	●										
	GLO357510	35x7,5x1	2000																																								
	GLO351515	35x15x1,5	2000																																								
	GPO357510	35x7,5x1	2000																																								
	GPO351515	35x15x1,5	2000																																								
CHANNEL CANTILEVER ARMS	SPZ271820	27x18x1,25	200																			●	●	●			●	●	●	●	●	●	●	●	●	●	●	●	●	●			
	SPZ271830	27x18x1,25	300																			●	●	●			●	●	●	●	●	●	●	●	●	●	●	●	●	●			
	SPZ384020	38x40x2	200																						●	●				●	●			●	●			●	●			●	
	SPZ384025	38x40x2	250																						●	●				●	●			●	●			●	●			●	
	SPZ384030	38x40x2	300																						●	●				●	●			●	●			●	●			●	
	SPZ384035	38x40x2	350																						●	●				●	●			●	●			●	●			●	
	SPZ384040	38x40x2	400																						●	●				●	●			●	●			●	●			●	
	SPZ384050	38x40x2	500																						●	●				●	●			●	●			●	●			●	
	SPZ384060	38x40x2	600																						●	●				●	●			●	●			●	●			●	

3. INSTALLATION DATA

3.1 TO-GU

Channel stud nut

Material	Coating	Valid for
Steel	Zinc-plated	Slotted channel GP-G

Installation data

Code	ØA	B	D	E	H	Valid for
TG230620	M6	4	23	13	20	20/10 - 25/08 - 25/11 - 27/18
TG230820	M8	5	23	15	20	27/18 – 28/30
TG230830	M8	5	23	15	30	27/18 – 28/30
TG340830	M8	5	33	15	30	38/40 – 40/20
TG341030	M10	5	33	15	30	38/40 – 40/20

Drawing

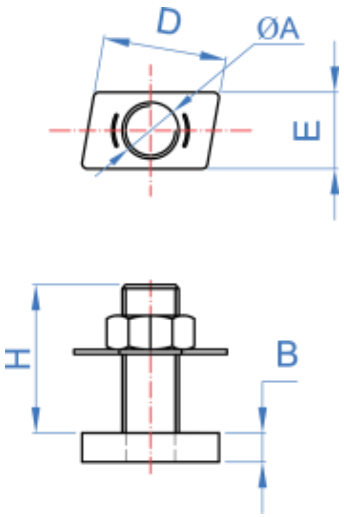

Maximum recommended sliding and tension loads

Code	Channel	Installation torque [Nm]	Sliding load [kN]	Tension load [kN]
TG230620	GPG271812	8.1	0.51	0.43
TG230830	GPG271812	10.0	0.75	1.83
TG230620	GPG283018	8.1	0.40	0.55
TG230830	GPG283018	10.0	0.52	2.77
TG340830	GPG384020	10.0	0.82	3.52
TG341030	GPG384020	10.0	0.84	3.08
TG340830	GPG402015	10.0	0.81	2.45
TG341030	GPG402015	10.0	0.92	1.64
TG230620	GPZ250808	8.1	0.96	0.49
TG230830	GPZ250808	10.0	1.05	0.67

3.2 TU-GU

Channel nut

Material	Coating	Valid for
Steel	Zinc-plated	Slotted channel GP-G

Installation data

Code	ØA	B	D	E	Valid for
TUG201006	M6	4	23	13	20/10 - 25/08 - 25/11 - 27/18 - 28/30
TUG201008	M8	4	23	13	20/10 - 25/08 - 25/11 - 27/18 - 28/30
TUG271808	M8	4	30	24	27/18 - 28/30 - 38/40 - 40/20
TUG271810	M10	4	30	24	27/18 - 28/30 - 38/40 - 40/20

Drawing

TUG2010XX

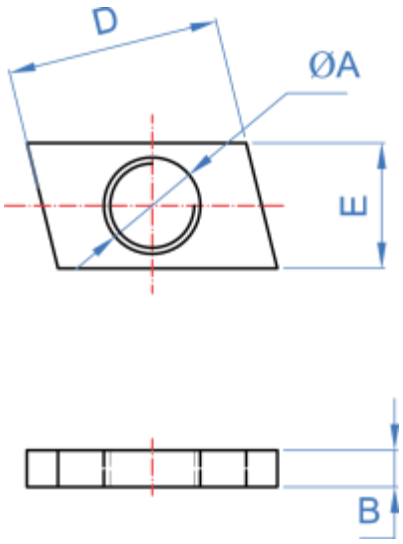

TUG2718XX

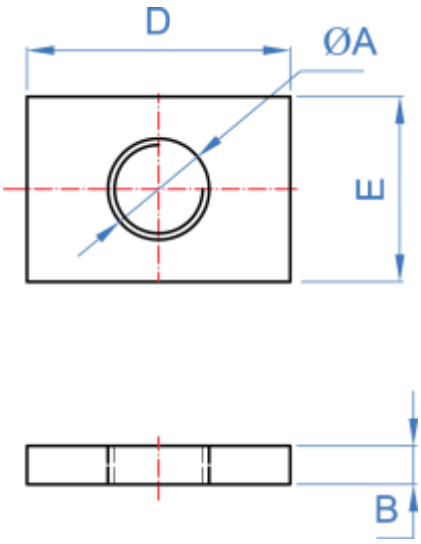

Maximum recommended sliding and tension loads

Code	Channel	Installation torque [Nm]	Sliding load [kN]	Tension load [kN]
TUG271808	GPI283015	14.9	0.69	5.33
TUG271808	GPI384020	14.9	0.74	5.84
TUG271810	GPI283015	25.8	0.66	5.84
TUG271810	GPI384020	25.8	1.20	6.19

3.3 TU-GRA

Indextrut fast nut-guide with washer

Material	Coating	Valid for
A	Z ZINC C1	
Steel	Zinc-plated	Slotted channel GP-G

Installation data

Code	A	B	C	ØD	M	Valid for
TUGRA2706	23,5	26	14	31	M6	20/10 - 25/08 - 25/11 - 27/18 - 28/30
TUGRA2708	23,5	26	14	31	M8	20/10 - 25/08 - 25/11 - 27/18 - 28/30
TUGRA3808	33	36	16	41	M8	27/18 - 28/30 - 38/40 - 40/20
TUGRA3810	33	36	16	41	M10	27/18 - 28/30 - 38/40 - 40/20

Drawing

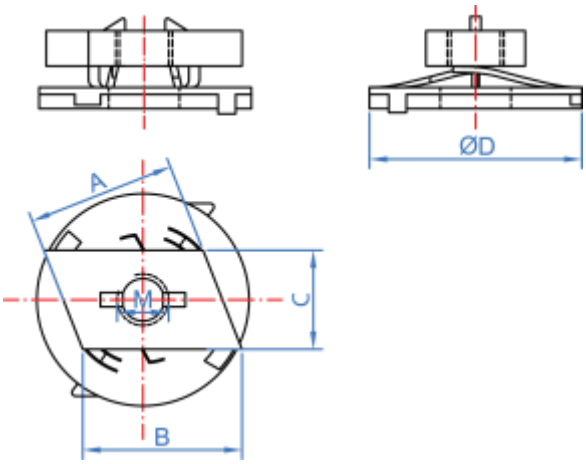

3.4 TO-GR

Indextrut fast-fixing stop screw

Material	Coating	Valid for
Steel	Zinc-plated	Slotted channel GP-G

Installation data

Code	A	B	C	ØD	H	M	SW	Valid for
TGR230620	23,5	26	14	31	23	M6	10	20/10 - 25/08 - 25/11 - 27/18 - 28/30
TGR230820	23,5	26	14	31	23	M8	13	20/10 - 25/08 - 25/11 - 27/18 - 28/30
TGR230830	23,5	26	14	31	33	M8	13	20/10 - 25/08 - 25/11 - 27/18 - 28/30
TGR340830	33	36	16	41	33	M8	13	27/18 - 28/30 - 38/40 - 40/20
TGR341030	33	36	16	41	33	M10	17	27/18 - 28/30 - 38/40 - 40/20

Drawing

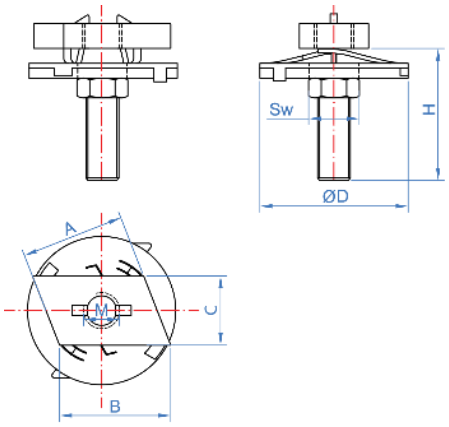

3.5 EG-Z / EG-A2

Zinc-plated / stainless steel brackets

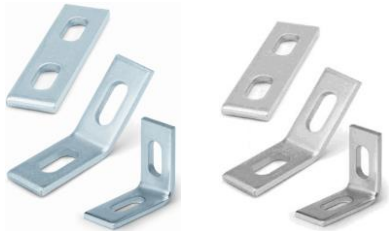

Material		Coating		Valid for	
A	A2 INOX AISI 304	Z ZINC	--		
Steel	Stainless Steel A2	Zinc-plated	--	Slotted channel GP-G	Slotted channel GP-A2

Installation data

Code	Code	Size	N° of holes
EMZ45	EMI45	45º	2
EMZ90	EMI90	90º	2
EMZ00	EMI00	180º	2

	Drawing	Maximum recommended Load* [kg]
EMZ45 / EMI45	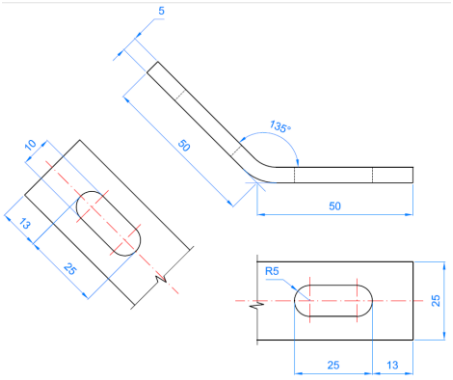	540
EMZ90 / EMI90	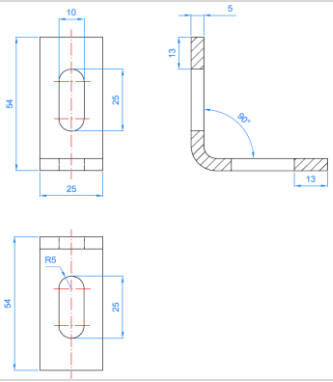	540
EMZ00 / EMI00	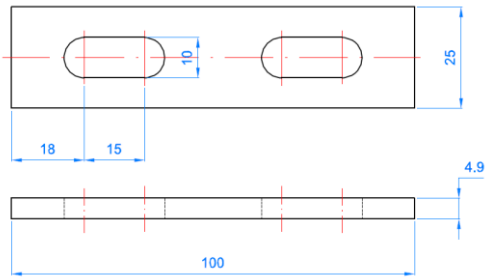	540

*Resistances for loads applied on structures without cantilever.

3.6 PG-Z / PG-A2

Zinc-plated / stainless steel U-fitting

Material		Coating		Valid for	
A	A2 INOX AISI 304	Z ZINC	--		
Steel	Stainless Steel A2	Zinc-plated	--	Slotted channel GP-G	Slotted channel GP-A2

Installation data

Code	Code	Valid for
PGZ2718	**PGI2718**	27/18
PGZ2830	**PGI2830**	28/30
PGZ3840	**PGI3840**	38/40

Drawing

PGZ2718 / PGI2718	PGZ2830 / PGI2830	PGZ3840 / PGI3840
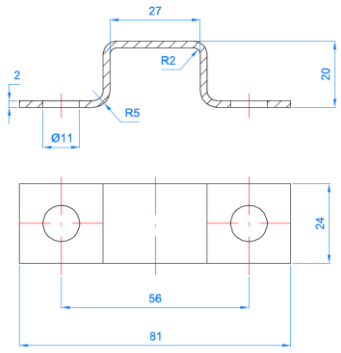	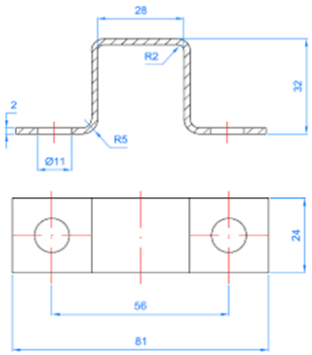	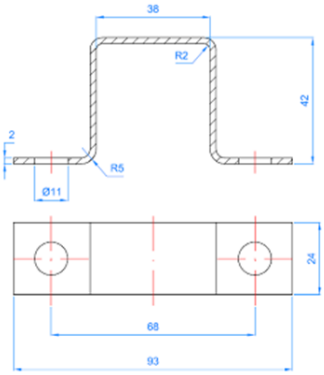

3.7 PU-Z

Union plate for profiles

Material	Coating	Valid for
Steel	Zinc-plated	Guia perforada GP-G

Installation data

Code	A	B	C	ØD	R
PUZ2718	27,5	25	10,5	9	2
PUZ3840	38,5	25	10,5	9	2,5

Drawing

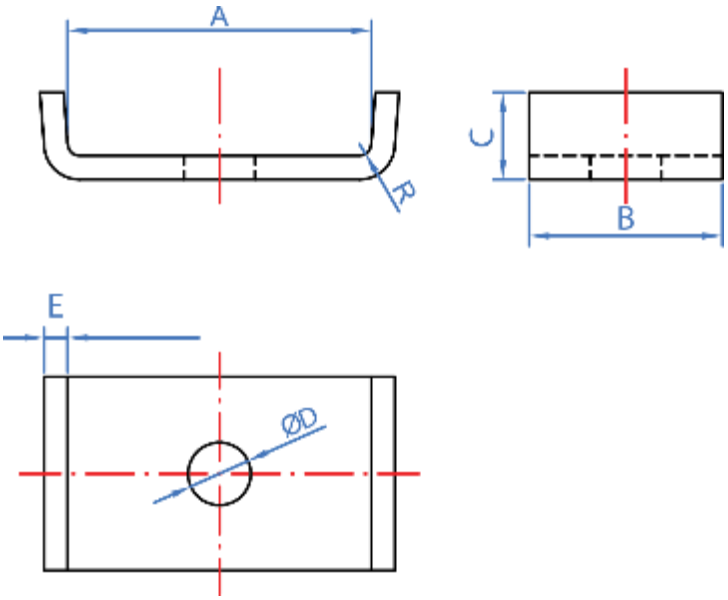

3.8 SO-TP

Plastic cap for framing systems

Material	Valid for
Polypropylene	Slotted channel GP-G / GP-X

Installation data

Code	A	B
SOTP2718	30	20
SOTP2830	30	30
SOTP3840	40	40
SOTP4121	41	21
SOTP4121	41	41

Drawing

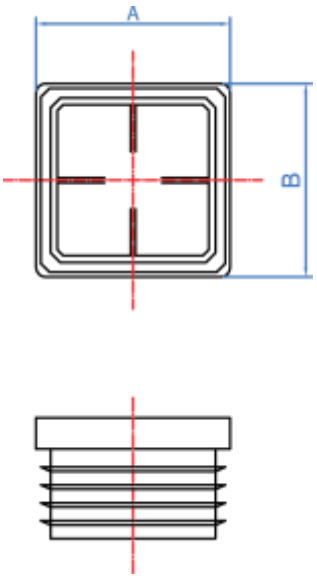

3.9 SO-PG

Isophonic rubber profile

Material	Valid for
EPDM	
EPDM Rubber	Slotted channel GP-G / GP-X

Installation data

Code	A	B	C	D
SOPG27	28	15,5	6	16
SOPG38	39	17,5	8	19,5
SOPG41	41	25,5	8	19

Drawing

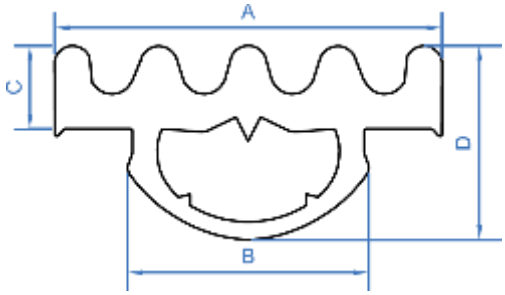

4. GEOMETRIC DATA

REFERENCE	SECTION	WEIGHT	AREA	MOMENT OF INERTIA (I_y)	MOMENT OF INERTIA (I_z)	RESISTANT MODULE (W_y)	RESISTANT MODULE (W_z)
	[mm x mm]	[Kg/m]	[cm^2]	[cm^4]	[cm^4]	[cm^3]	[cm^3]
GPZ201010	20 x 10	0.31	0.44	0.06	0.25	0.10	0.25
GPZ250808	25 x 8	0.26	0.35	0.03	0.30	0.06	0.24
GPG271812	27 x 18	0.66	0.84	0.37	0.97	0.34	0.71
GPG283018	28 x 30	1.25	1.60	1.79	2.10	1.03	1.50
GPG384020	38 x 40	2.00	2.55	5.39	6.18	2.39	3.25
GPG351312	35 x 13	Performance not declared					
GPG402015	40 x 20	0.94	1.30	0.71	3.10	0.57	1.55
GPP271812	27 x 18	0.66	0.84	0.37	0.97	0.34	0.71
GPI271812	27 x 18	0.66	0.79	0.36	0.90	0.33	0.67
GPI283015	28 x 30	1.25	1.37	1.54	1.82	0.89	1.30
GPI384020	37 x 40	2.00	2.55	5.39	6.18	2.39	3.25
SPZ271820	27 x 18	1,20	0.84	0.37	0.97	0.34	0.71
SPZ271830	27 x 18	1,20	0.84	0.37	0.97	0.34	0.71
SPZ384020	38 x 40	2,4	2.55	5.39	6.18	2.39	3.25
SPZ384025	38 x 40	2,4	2.55	5.39	6.18	2.39	3.25
SPZ384030	38 x 40	2,4	2.55	5.39	6.18	2.39	3.25
SPZ384035	38 x 40	2,4	2.55	5.39	6.18	2.39	3.25
SPZ384040	38 x 40	2,4	2.55	5.39	6.18	2.39	3.25
SPZ384050	38 x 40	2,4	2.55	5.39	6.18	2.39	3.25
SPZ384060	38 x 40	2,4	2.55	5.39	6.18	2.39	3.25

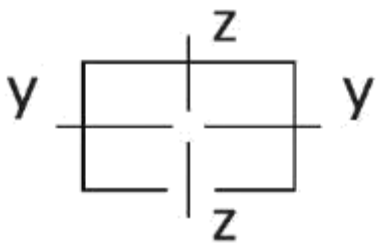

5. LOAD AND DESIGN HIPOTESIS

LOAD AND DESIGN HIPOTESIS FOR SLOTTED CHANNELS GP-Z

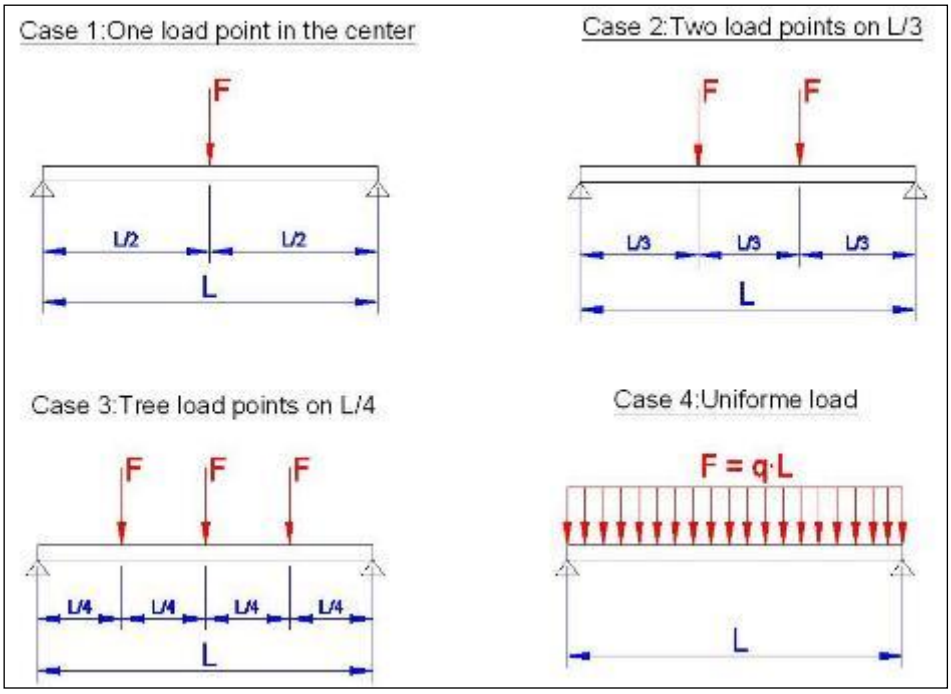

LOAD AND DESIGN HIPOTESIS FOR CANTILEVERS SP-Z

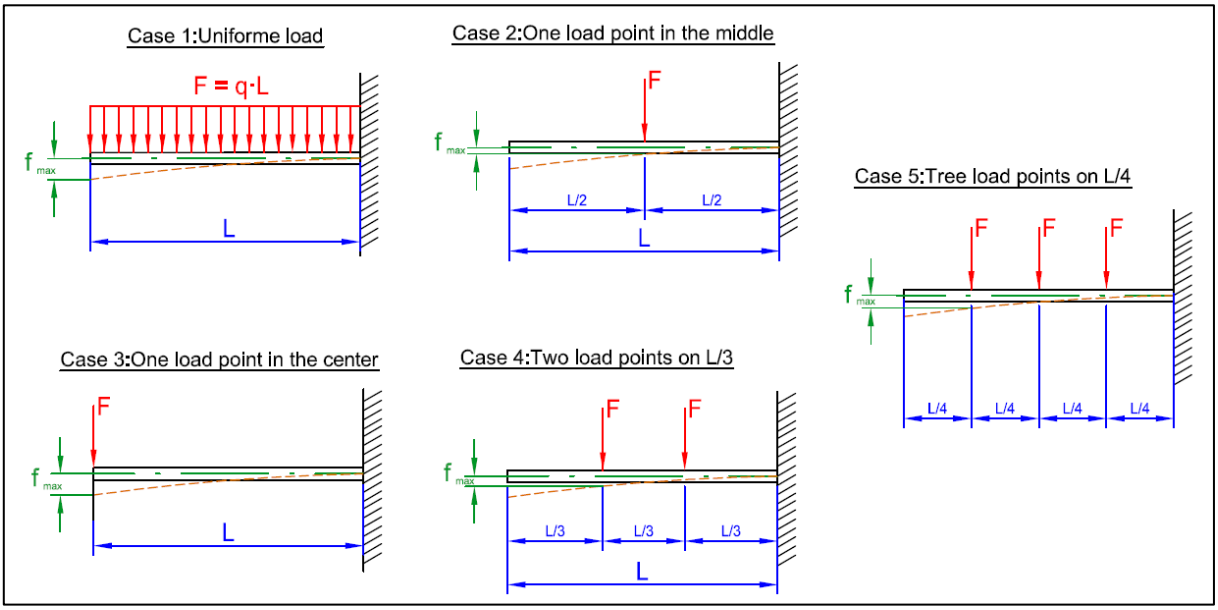

MAXIMUM RECOMMENDED LOADS FOR SLOTTED CHANNELS GP-Z

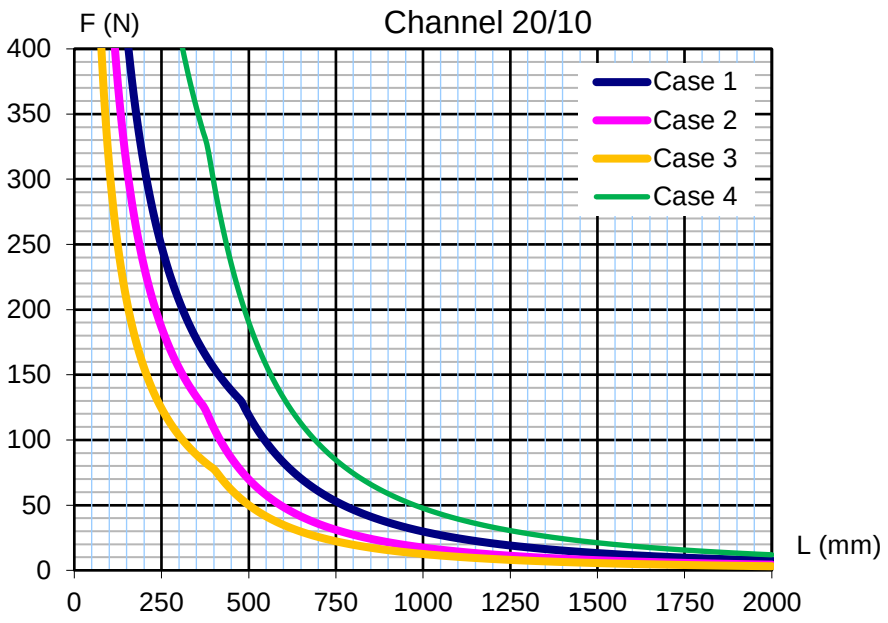

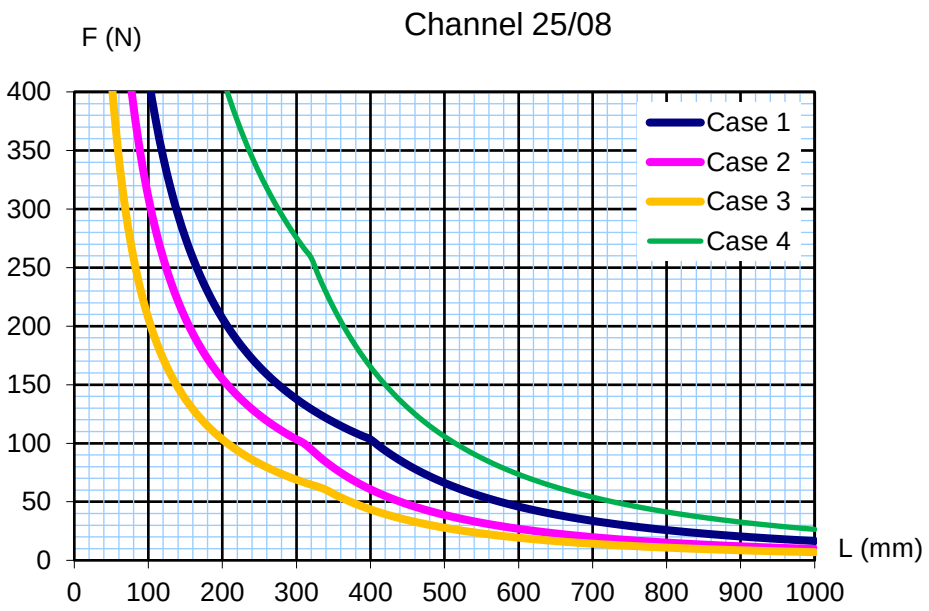

MAXIMUM RECOMMENDED LOADS FOR SLOTTED CHANNELS GP-G

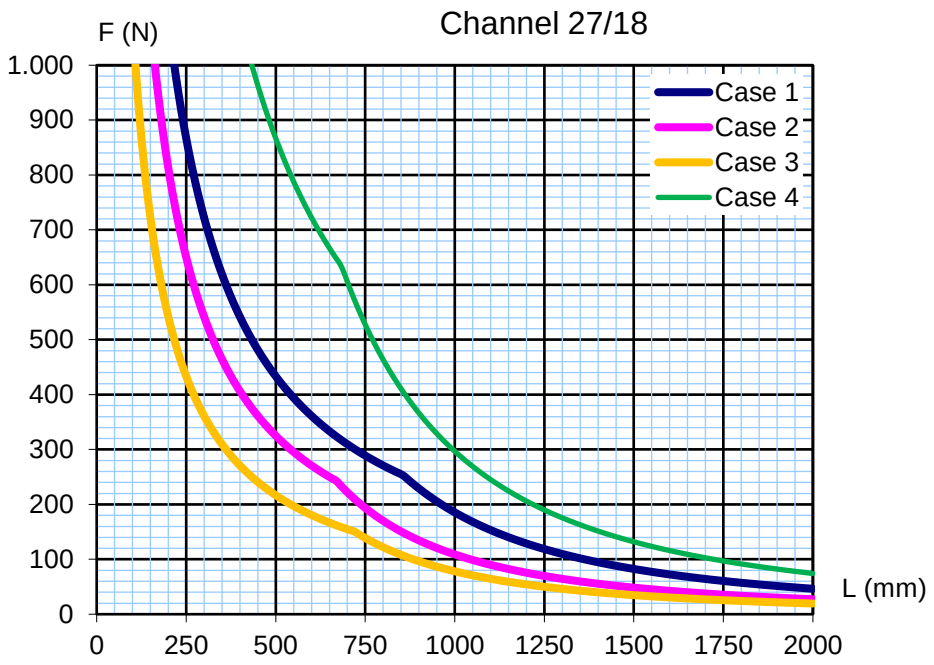

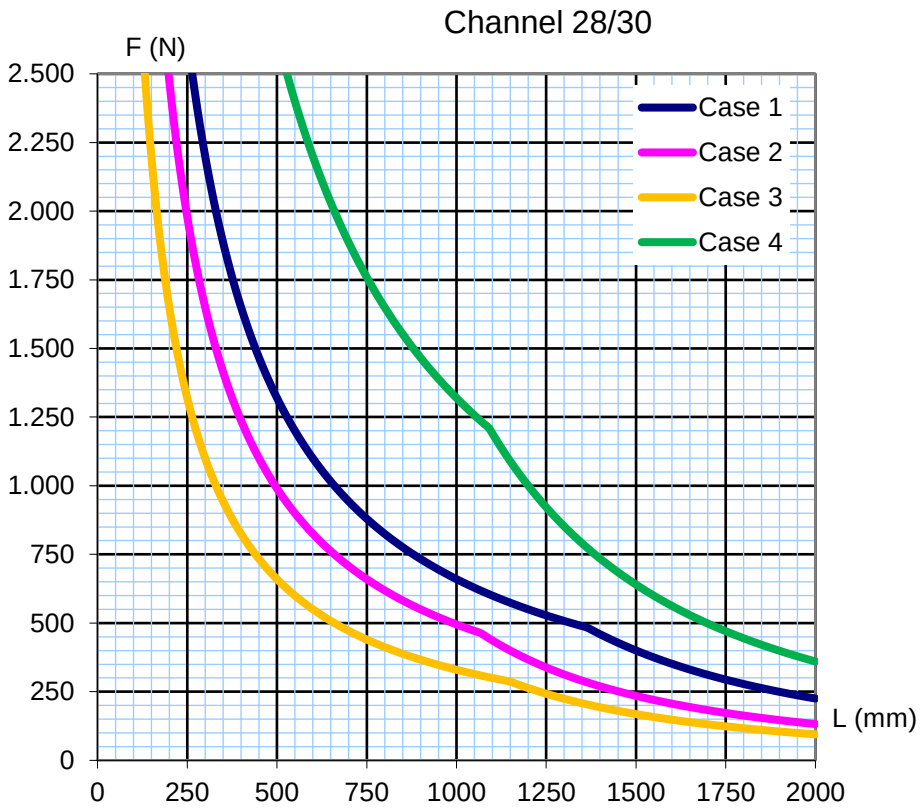

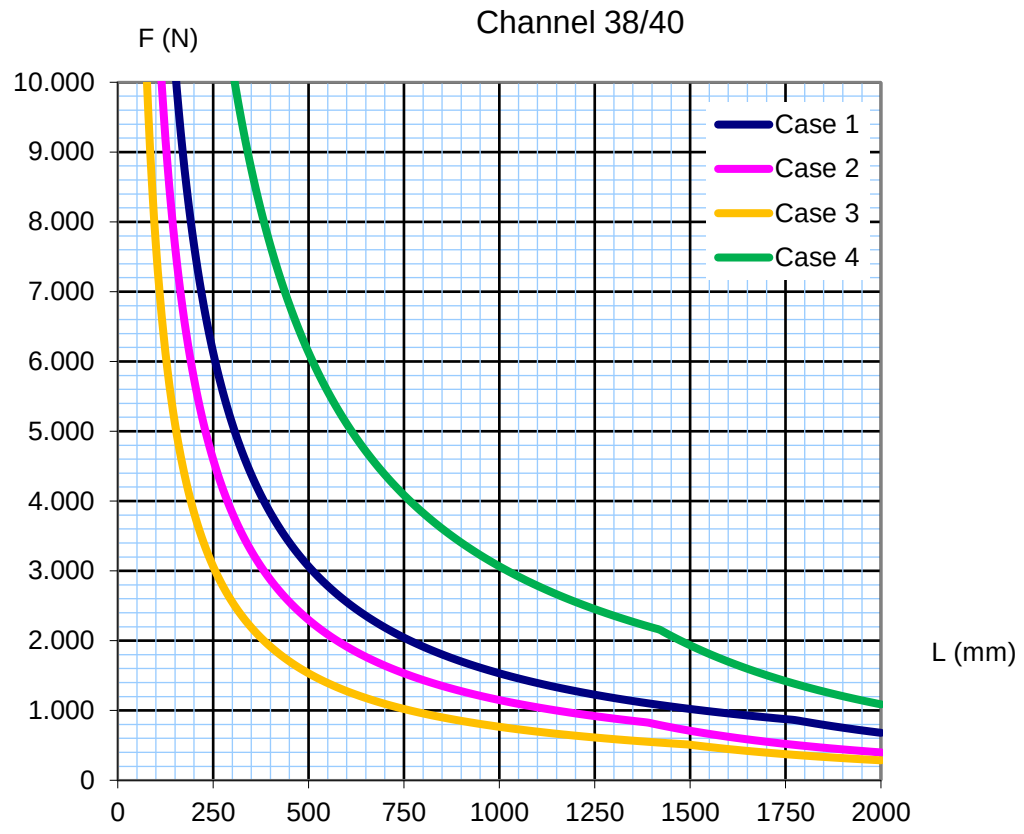
Channel 38/40
F (N)
10.000
9.000
8.000
7.000
6.000
5.000
4.000
3.000
2.000
1.000
0
0
250
500
750
1000
1250
1500
1750
2000
L (mm)
Case 1
Case 2
Case 3
Case 4

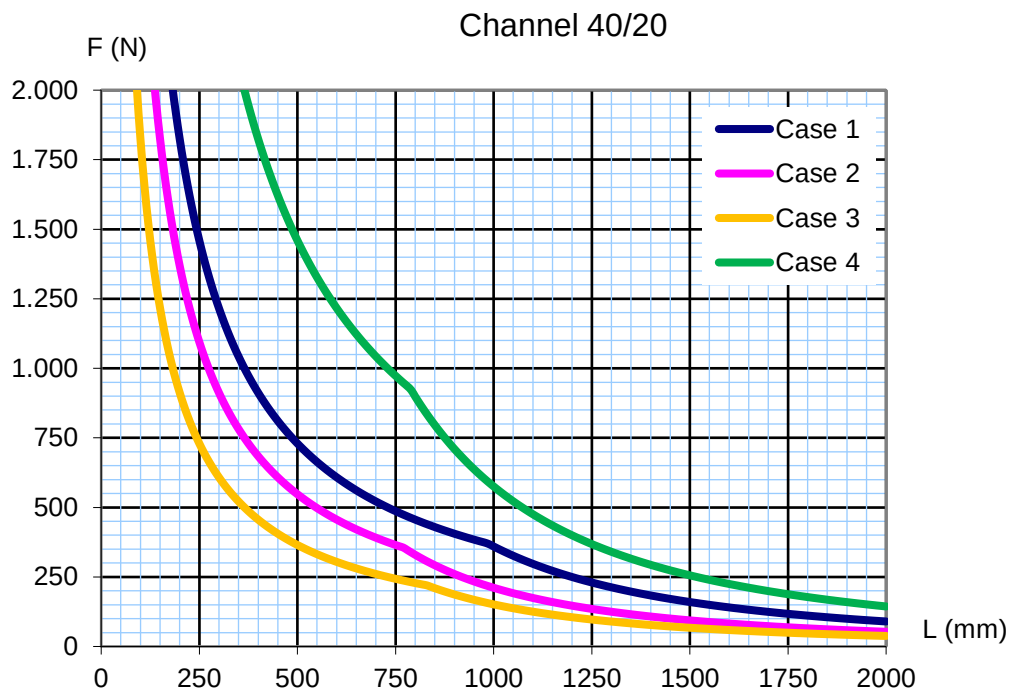
Channel 40/20
F (N)
2.000
1.750
1.500
1.250
1.000
750
500
250
0
0
250
500
750
1000
1250
1500
1750
2000
L (mm)
Case 1
Case 2
Case 3
Case 4

MAXIMUM RECOMMENDED LOADS FOR SLOTTED CHANNELS GP-A2

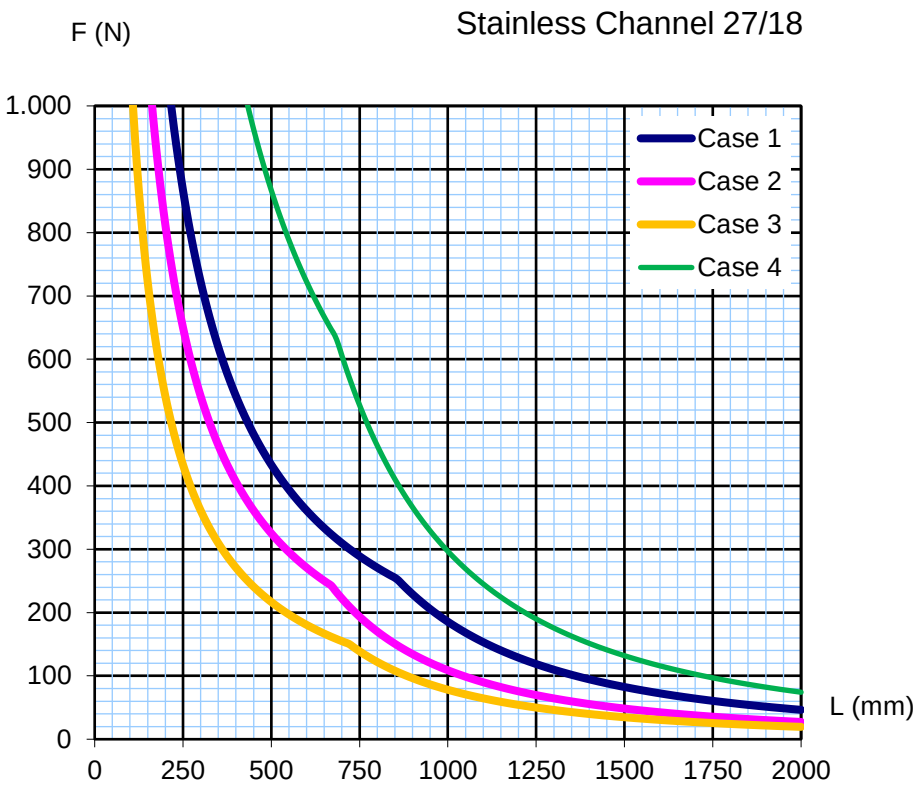

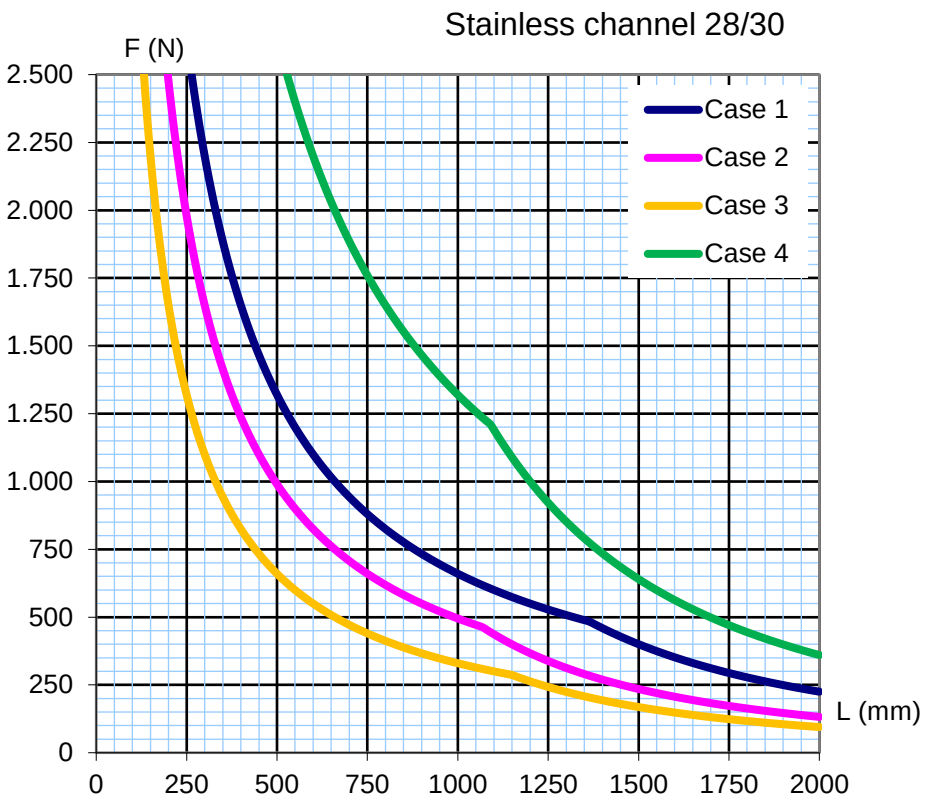

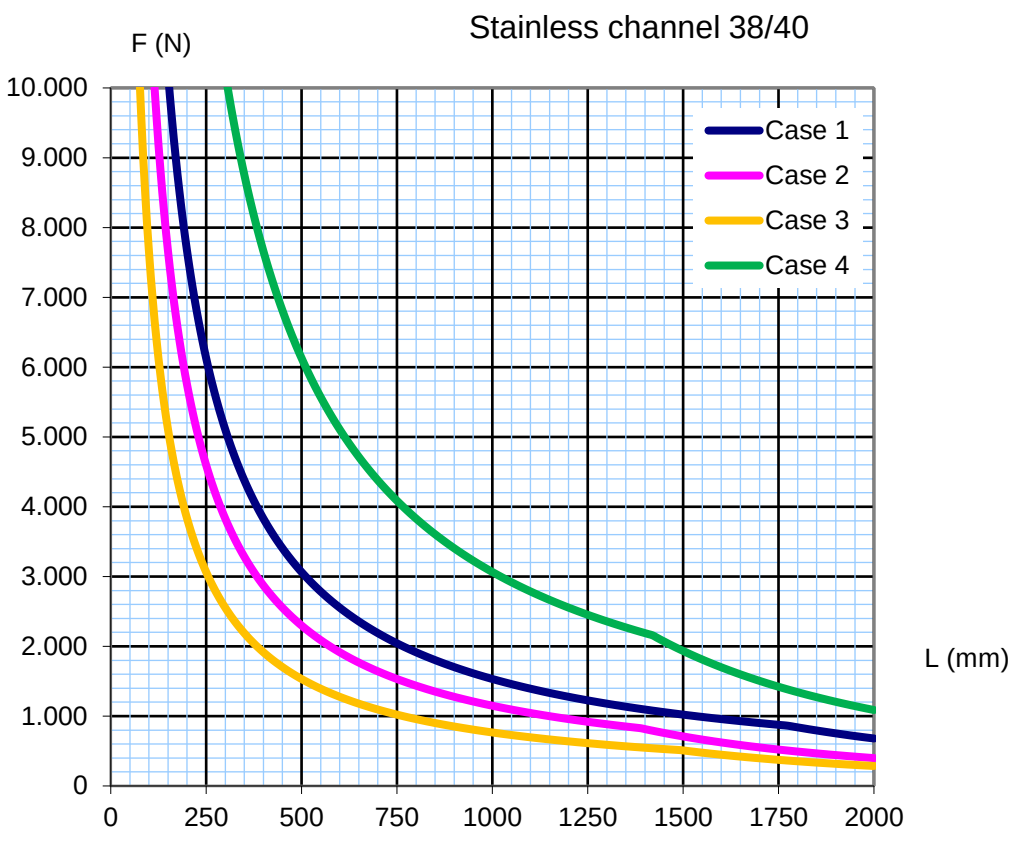
Stainless channel 38/40
F (N)
10.000
9.000
8.000
7.000
6.000
5.000
4.000
3.000
2.000
1.000
0
0
250
500
750
1000
1250
1500
1750
2000
L (mm)
Case 1
Case 2
Case 3
Case 4

MAXIMUM RECOMMENDED LOADS FOR CANTILEVERS SP-Z

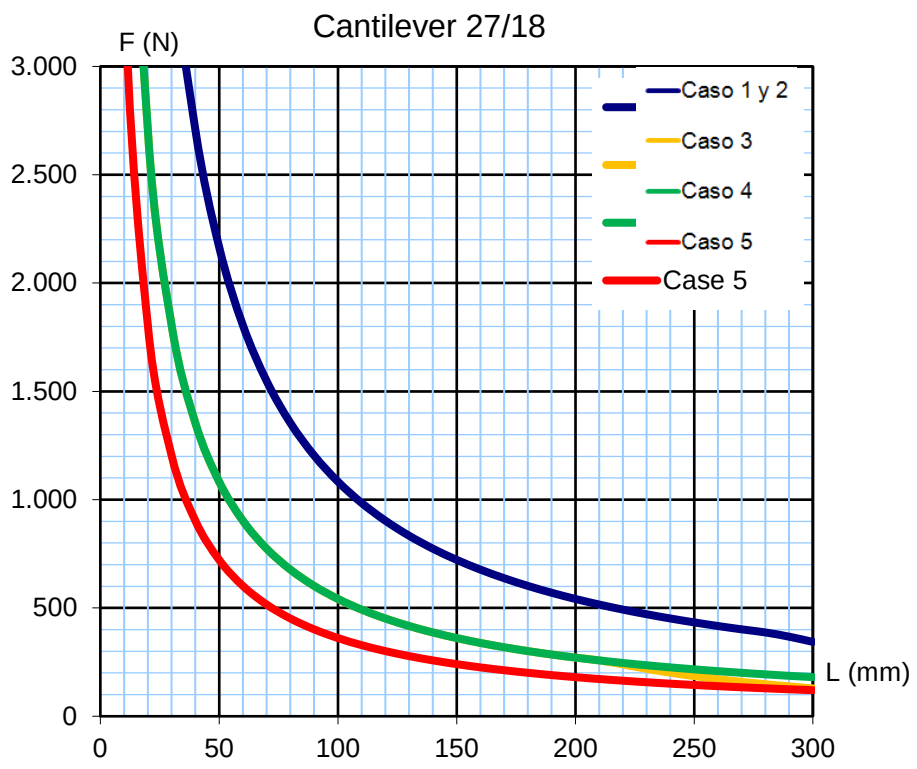

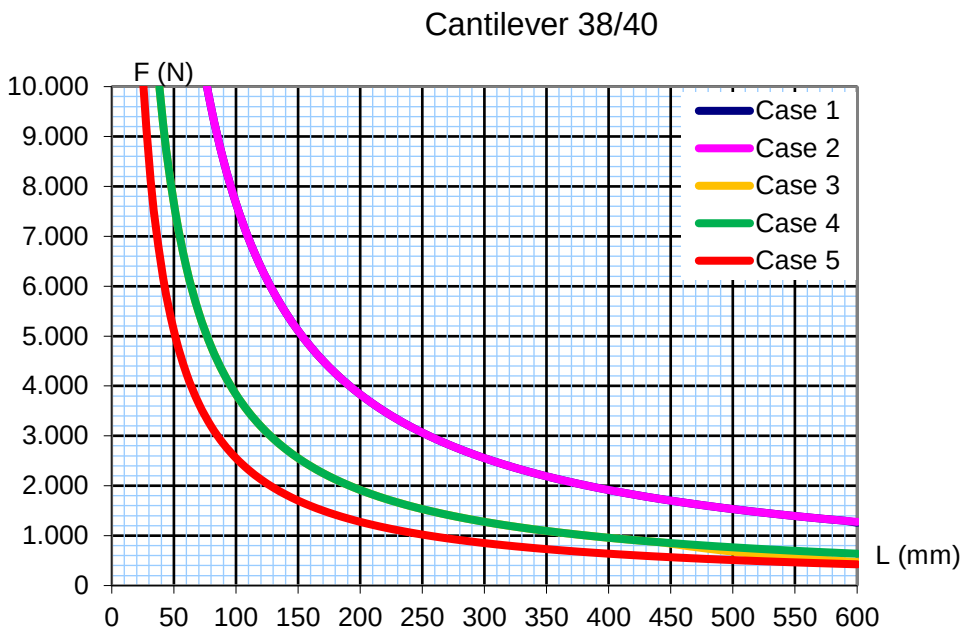

SLOTTED CHANNEL DESIGN EXAMPLE

Slotted channel design example:

Channel GPG402015: Channel length 800 mm with three clamps equally spaced at 200 mm (case 3)

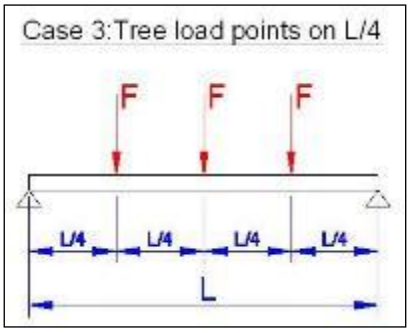

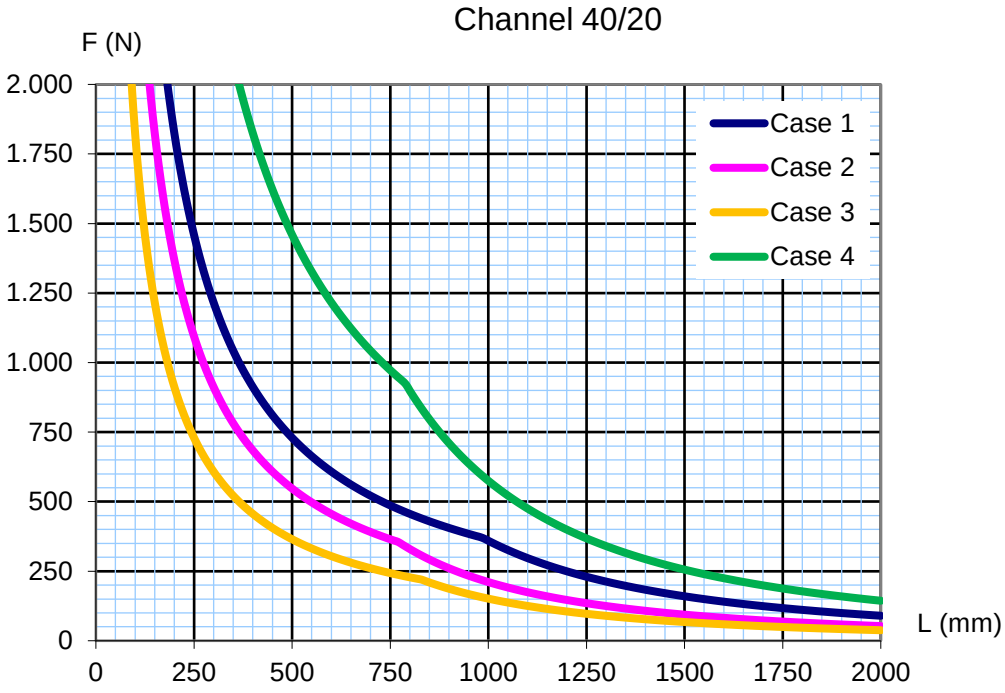

Result is an admissible load per clamp of 250 N (≈25 Kg).

CANTILEVER DESIGN EXAMPLE

Cantilever design example:

Cantilever SPZ384020: One pipe situated 150 mm from the wall (case 2).

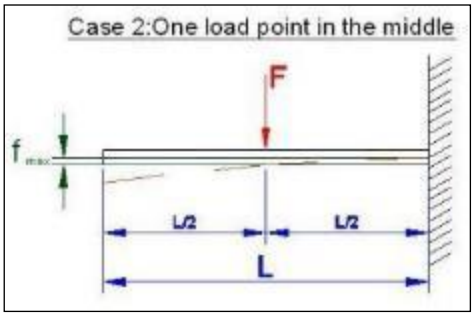

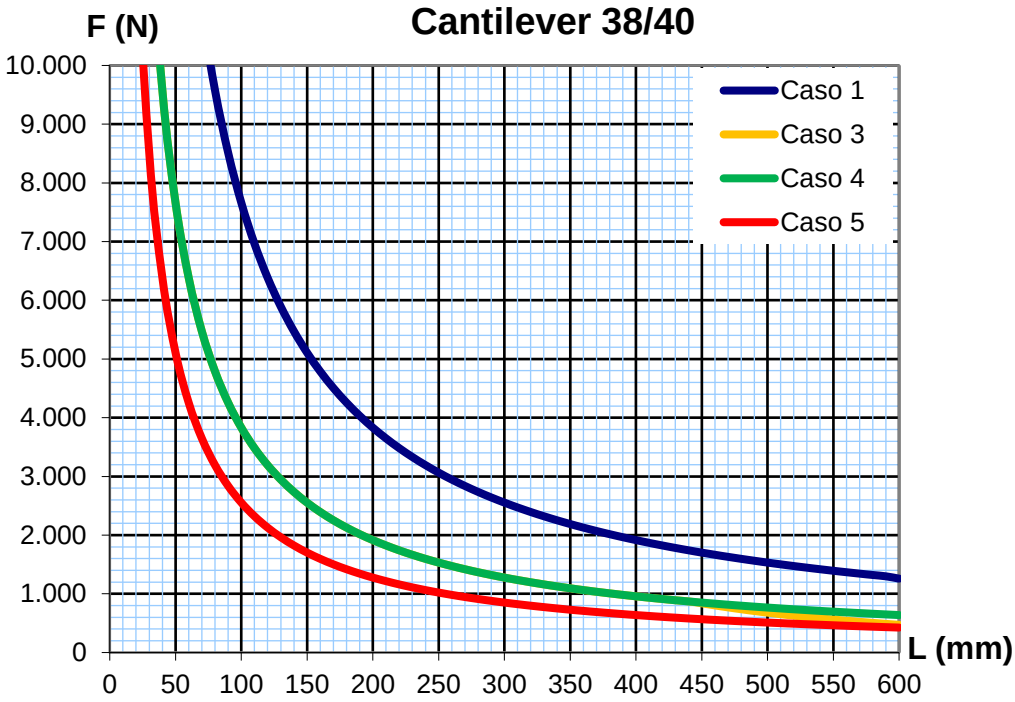

Result is an admissible load of 5.000 N (≈500 Kg).

These admissible loads are only applicable if the cantilever is fixed with anchors complying with their guidelines of use and their corresponding applications.

Loads transmitted to the base material must be checked separately (steel and concrete)