RE-TE

PRODUCT DESCRIPTION

- Watertight trebol rivet

CHARACTERISTICS

- Tri-bulb blind rivets.
- Aluminium head and shaft.
- Includes EPDM washer
- For outside use.
- Used to join rigid and soft materials.
- Excellent watertightness.
- Large contact surface after expansion with good load distribution.
- Adaptable expansion, can be used on oversized drill holes.

APPLICATIONS

PSA-A

For the installation of solar panels on **aluminium coplanar mounting systems with direct fixing**.

The structural components of the solar range that are normally installed are:

- **PSA-A**, winged aluminium solar profiles for direct fixing.

Extremely reliable joint used for mounting on metal roofs, maintaining watertightness.

BASE MATERIAL/SEALING ACCESSORIES

BASE MATERIAL

Metal sheet

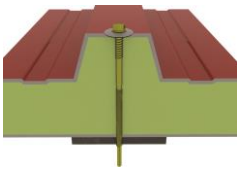

Sandwich panel

SEALING ACCESSORIES

CS-B
Butylene adhesive sealing tape

APPLICATION EXAMPLES

Application example 1: mounting of the PSA-A profile

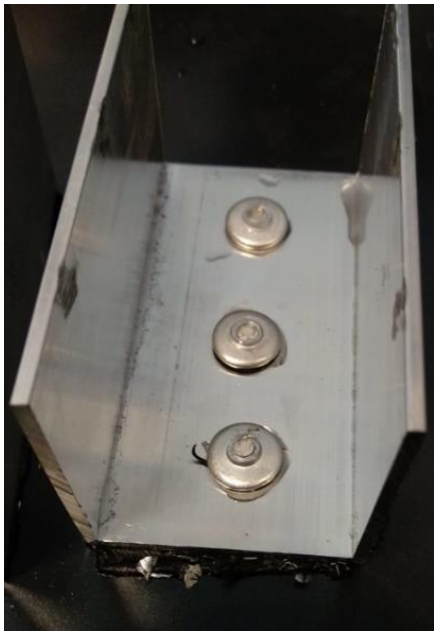

Application example 2: detail showing mounting on sheet metal to test watertightness

1. RANGE

ITEM	CODE	PHOTO	DESCRIPTION	DIAMETER	LENGTH	MATERIALS	
1	**RETE5220**		Watertight trebol rivet	5.2 mm	20 mm	Aluminium	EPDM

2. INSTALLATION INFORMATION

2.1 RE-TE — Watertight trebol rivet

Material		Compatible
Aluminium	EDM	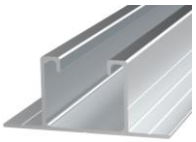 PSA-A Winged aluminium profile
Base material		**Sealing accessories**
Metal sheet	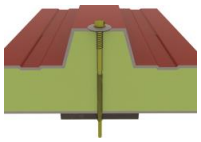 Sandwich panel	CS-B Butylene adhesive sealing tape

Measurement table

Code	D (mm)	L (mm)	Dv (m)	M (mm)	W (mm)
RETE5220	5.2	20	11.3	25.4	3

Drawing

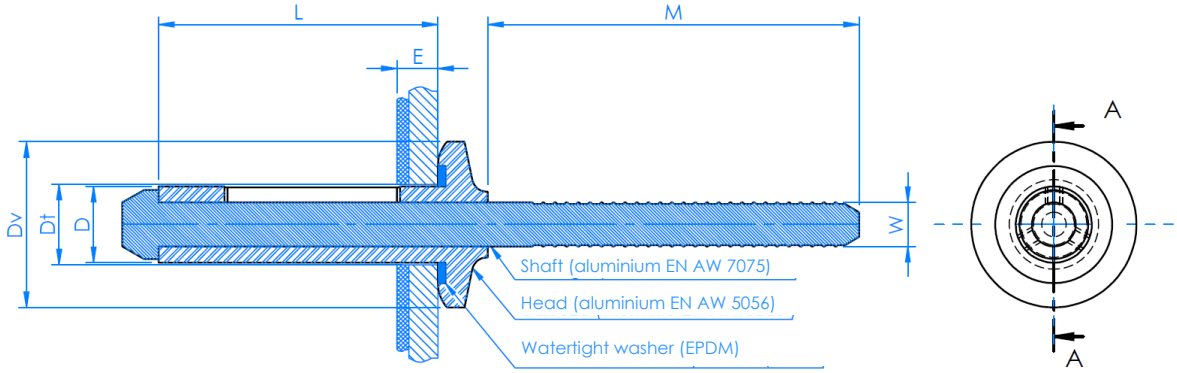

SECTION A-A

Installation table

Code	Dt Drilled hole diameter (mm)	E Attachment thickness (mm)	Extraction strength (kN)	Shear strength (kN)	Shaft traction strength (kN)	Extraction load PSA-A profile/0.6 mm S280GD sheet steel N_{Rd} (kN)
RETE5220	5.3-5.5	1.6-6.4	2	3	3.4	0.8

Installation tools

RM-MA
Hand riveter for blind rivets

RM- PA
Long arm hand riveter